General Catalogue 2025

Explosion protection by WAROM

WAROM TECHNOLOGY INCORPORATED COMPANY



WAROM EXPLOSIONPROOF



Create A World Famous Ex Brand

Providing quality explosion-proof products to customers, and spreading national spirit to the world. Leading to revitalize national explosion-proof industry, Warom Technology is marching forward to the great goal of creating a world brand.

We sincerely hope that friends from all walks of life support and pay close attention to Warom, move forward hand in hand, and create a brilliant and splendid future together.

1 General Contents

1 **General Information**
Introduction of Warom Technology Incorporated Company / Basics of Explosion Protection / Basics of Dustproof & Waterproof/ Schematic Diagram of Field Installation / Technical Data of Lamp

2 **Lighting Technology**
Light Fittings for Fluorescent Lamp / LED Light Fittings / Pendant Light Fittings / Floodlights / Street Lamps / Hand Lamps / Local, Caution Spotlight Fittings

3 **Installation Equipments**
Installation Switches/ Junction Boxes/ Terminal Boxes/ Plug and Sockets

4 **Control Equipments**
Position Switches / Control Stations and Components / Control Units / Control Buttons / Indicators / Control Switches / Ammeters and Voltmeters

5 **Loads and Motor Switchgears**
Motor Switches / Standard Motor Starters

6 **Distribution Boxes and Empty Enclosures**
Distribution Boxes / Components for Distribution Boxes / Explosion-proof Enclosures / Increased Safety Enclosures

7 **Cable Glands and Bushings**
Bushings / Connectors / Seal Bushings / Cable Glands / Flexible Conduits / Accessories

8 **Air Conditioners and Pressurized Products**
Exhaust Fans / Air Conditioners / Distribution Cabinets / Engineering Cabins / Camera / Online Monitoring Analysis System / Helicopter Platform / Explosion-proof Computer System

Contents

Introduction of Warom Technology Incorporated Company

Brief Introduction 1/1
Introduction of Explosion-proof Technology 1/3
Introduction of Explosion-proof Production 1/4
Introduction of Quality Control 1/5
Introduction of Sales 1/8

Basics of Explosion Protection

Explosion Protection 1/9
Classification of Zones 1/9
Temperature Classes 1/10
Explosion Groups 1/10
Types of Protection 1/11
Introduction of NEC Standards 1/14
Certification and Marking 1/15

Basics of Dustproof & Waterproof 1/16

Schematic Diagram of Field Installation 1/17

Technical Data of Lamp 1/19

1

Brief Introduction



Company Brief

★ **WAROM TECHNOLOGY INCORPORATED COMPANY** is a non-regional joint-stock company in China, listed on the main board (stock code: 603855). It is located in Jiading district, Shanghai, with a registered capital of 337 million RMB. It manufactures explosion-proof electrical apparatus, which are used in factories, mines, marine environments, offshore platforms, military applications, nuclear power, etc. As the standing unit of China Electrical Equipment Industry Association, the vice-director unit of China Explosion-proof Electric Association, the member unit of China Shipping Industry Association, the member unit of China Quality Association, Shanghai Foreign Trade Association and the member unit of China Association of Lighting Industry, Warom has maintained its advantage as a company in China's explosion-proof industry for 20 consecutive years.

★ In order to be a world famous brand, Warom establishes a powerful technical team of about 500 junior and senior technicians. The products represent the first level of similar products in China. It has intellectual property rights of all our products and obtains International and Chinese patent certificates. It also registered the "WAROM" trademark in more than 30 countries in the world.

★ Warom Shanghai Industrial Park is currently the largest base for explosion-proof electrical equipment manufacturing in the industry that fully equipped with the most advanced facilities and has achieved full automation or semi-automation on production processes and equipment. The park covers an area of over 190,000 square meters with modern workshop of 160,000 square meters and more than 2,000 workers. Warom has established a CNAS certified laboratory in the explosion-proof industry with a large number of advanced testing and control equipment from materials to performance, electricity to optics, and electrical safety to electromagnetic safety, etc.

"Let Warom's Product Speak for itself!"

Brief Introduction



★ The company has a well-established quality assurance system and an internationally-oriented management structure. It has obtained certifications for quality management system ISO9001, environmental management system ISO14001, occupational health and safety management system ISO45001, information security management system ISO/IEC27001, information technology service management system ISO/IEC20000-1, international IECEx, EU ATEX, and Customs Union EAC systems. It has achieved certification for the measurement management system ISO10012. The products have received certifications from various international organizations such as Germany's PTB, France's LCIE, Norway's DNV, and others.

★ The products are widely used in the oil field, chemical industry, spaceflight, coal, electric power, railway, metallurgy, marine, public security, fire protection, irrigation works, city planning, telecom, diving rescue etc. and are favored by the users in 34 provinces and cities in China and more than 60 countries around the world. Therefore, Warom becomes reliable supplier and partner of famous company home and abroad and is honored with "China Inspection Exempted Product", "Famous Brand Product", "AAA Credit and Trustworthy Enterprise", etc.



★ Warom is advancing toward a world-renowned brand.

"Let Product Ensure User's Safety!"

1 Introduction of Explosion-proof Technology



Our Technology

Technology is the key of Warom's core competence, and it is also the driving force behind Warom's rapid development.

After over thirty years of effort, Warom has gained a great technological strength and led the industrial trend of Chinese explosion-proof electrical apparatus and currently the group is actively approaching international advanced technology.

At the present, the technological center of Warom Technology has more than 500 professional talents with specialty across different application science including Electric, Machinery, Automation, Chemical Corrosion, Information Technology, Communication, Mechanical Technics, Foundry, Measurement, and Illumination. Over the years, this team has demonstrated dynamic succession of technology and strong innovative capability.

The development of technology roots from specialization. Therefore, Warom sets up 9 professional products R &D departments, including light fittings R&D department, electric apparatus R&D department, military products R&D department, maritime electrical apparatus R&D department, communication products R&D department, monitoring products R&D department, pipe fittings R&D department, fan R&D department and software R&D department. The Exporting Product Technical Department is operated directly by the International Division; and it develops industrial explosion-proof products that are compliant to IEC, EN, CU-TR, NEC505, NEC500 standards in accordance to the international market requirements. It adopts various softwares, including CAD Design Software, 3D Simulation Software and Illuminance Calculation Software to consummate the whole designing process and strive for the full satisfaction of customer requirements in product design. Every year, the Exporting Product Technical Department develops 20 new products and launches explosion-proof products that are meeting the needs of the international market; until now Warom Technology has completed the development and the certification works of over 100 series products for export and has issued International Explosion-Proof Product Catalogue of 2023 edition for the international market.

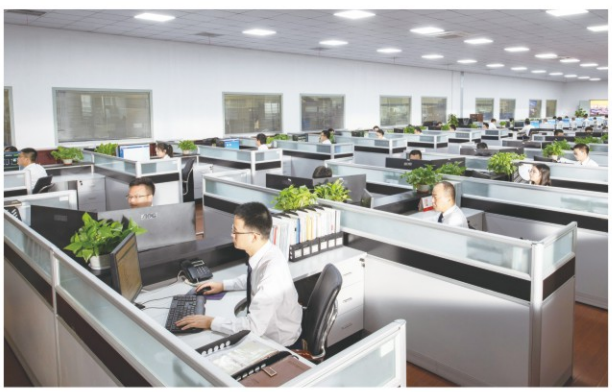

The technical department ensures the satisfaction of customer requirements of the design output through adopting CAD, Electric CAD and 3D Design Software, conducting Simulation of Electric Performance, and Controlling of Designing Process. The 3D Design Software simulates the field condition, and the 3D Illuminance Calculation Software calculates the light illuminance in any point of a 3D space for the actual application effect, so as to ensure the on-site lighting requirement of user.

Introduction of Production

After over thirty years' development, the company founded the explosion-proof manufacturing base on Jiading of Shanghai, China, with land coverage of 150,000 square meters and a building coverage of 220,000 square meters. It has over 2,000 staffs with an annual production capacity of 500 million USD. The explosion-proof equipment automatic factory began to establish on December of 2014, which can achieve the automation of processing, assembly, testing, packaged and delivery of products and increase our annual production capacity of 500 Million USD.

There are seven units within the production department, including Export Production Unit, Die-Cast Unit, Fabricating Unit, Electric Appliance Unit, Piping Unit, Fan Unit, and Plastic Unit, forming an all-in-one explosion-proof apparatus manufacturing system.

The Exporting Production Unit is focusing on producing explosion-proof products for exporting that are complied with IEC, EN, CU-TR, NEC505 and NEC500 standards. The unit is directly under the management of the Foreign Trade Division of the company and is operating within the Quality Management System of ISO9001 and ISO/IEC 80079-34.

We firmly believe that the quality is controlled in the process, and we apply a variety of inspection equipments, inspection measures, and management modes to ensure the quality of our product through delicate elaboration.



◎ Dust Free Assembly Workshop



◎ Die-Cast Workshop



◎ Computer Numerical Control Processing Workshop



◎ Computer Numerical Control Processing Workshop



◎ Five-axis Automatic Machining Center



◎ Automatic Laser Cutting Machines



◎ Automatic Machining Center



◎ Micro-computerised Automatic Plane Milling Machine Unit



Introduction of Quality Control

Quality is the life of an enterprise; we follow strictly the stipulation of ISO9001, ISO/IEC 80079-34 Quality Management System: requirement for manufacturing, standard for inspection, record for processing, traceability for responsibility, correction for misplay, prevention to latent fault, continuing improvement.

The quality management is a direct responsibility of the General Manager; we have set up the quality inspection department, the inspection and testing center, the measurement center, and the quality management department internally, and we follow one authority principle, consistent responsibility and power principle, and non-vacancy & non-overlapping principle to ensure the authority and the uniqueness of quality control. and we have the only one CNAS certified laboratory in the explosion-proof industry.



We are an organizational member of “China Product Quality Association”, our product has been awarded “National Product of Stable and Certified Quality” and our quality management organization has been awarded the title of “Advanced Quality Management Enterprise” and our Inspection and Testing Laboratory has been the first in the industry that evaluated by “China Petroleum and Chemical Industry Association” as an “A Grade Quality Inspection Organization of Petroleum and Chemical Enterprise”.

We are not only paying attention to the quality control during the manufacturing process, but also pay more attention to the outgoing inspection before our products leave the factory. We make sure that each product must go through various inspection and testing items before it leaves the factory, and only those qualified after inspection and test are allowed to leave the factory.



◎ Mechanical Testing Center

The mechanical testing center is equipped with Computerized Universal Hydraulic Testing Machine, Micro-processed Spring Dynamometer, and Impact Testing Equipment. Various tests and measurements can be performed in the center, such as Material Strength Measurement (yield strength, and tensile strength, etc.), Pulling Force Test, Tempered Glass Impact Test, Spring Force Measurement, Rubber Hardness Measurement, and Material Hardness Measurement.



◎ Environmental Testing Center

Various Inspections and tests can be performed in the Environmental Test Center, such as Rubber Aging Test, Dust Protection Test, High & Low Temperature Test, Damp Heat Test, Low Temperature Environmental Simulation Test, High Temperature Environment Simulation Test, Anti-Corrosion Test, and Adhesive Force Test of Plastic Coating, etc..



◎ Temperature and Humidity Test Chamber



◎ Salt Fog Test Chamber



◎ Material Strength Measurement



◎ Lamp Photochromic Electric Test

1

Introduction of Quality Control

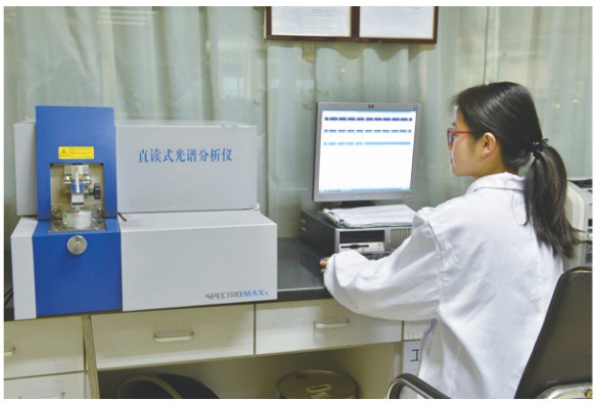

◎ Material Analysis Using Spectrometric Analyzer

Imported directly from Germany, the Full-Spectrum Spark Direct Reading Spectrometric Analyzer enables us to perform micro constituent analysis for the three basic materials of copper, aluminum, and steel, and the analysis of various constituent can be completed in mere 10 seconds.



◎ Electrical Laboratory

The electrical laboratory can perform various tests, including: Glow-Wire Test, Tracking Test, Needle Flame Test, Insulation Resistance Measurement, Voltage Withstand Test, Low Resistance Measurement, Contact Resistance Measurement, Earth Resistance Measurement, Lithium Battery Inner Resistance Measurement, and LED Luminous Flux Test and Measurement.



◎ Measurement of Luminous Intensity Distribution Curve

The Distribution Photometer is used for measuring the luminous intensity distribution curve of various lighting fixtures, it can satisfy the latest requirements of domestic and international standards; it can perform functional measurement for various luminous intensities, and it is suitable for luminous intensity test of different types of light source. This Distribution Photometer is controlled by computer with automatic focus adjustment, so the distribution curve can be finished in one run.



◎ Ingress Protection Test



◎ Ultrasonic Thickness Measurement
(measuring glass thickness, etc.)

Introduction of Sales

We are devoted to the market development. We have established a massive sales network in China, with over 200 local sales branch offices. Warom has gained strong brand recognition in China; from Aerospace Industry to Military Industry, Oil Exploitation in land and offshore, from Oil Refinery to Fine Chemical, from Heavy Industrial Smelt to shipbuilding, from Vintage and Winery to Pharmaceutical Manufacturing, Warom's products have been widely used in different industries. For the past 16 years till now, Warom has been the No.1 in terms of sales and production in the explosion-proof industry of China.

In 2002, Warom started its international endeavor by activating international market research, technological development, and quality positioning. Since then Warom has actively participated in various international professional exhibitions, such as Germany Hannover Messe, ADIPEC in United Arab Emirates, Indonesia Oil & Petrochemical Exhibition, ASEAN Oil & Chemical Exhibition, and Brazil International Oil & Gas Exhibition. In 2005, we have completed the design, production and quality control system for the exporting products; and our products have been exported to various countries and regions, including Germany, Italy, France, Poland, Russia, Kazakhstan, Iran, Oman, Saudi Arabia, Syria, Israel, Sudan, Egypt, South Africa, Pakistan, Vietnam, Thailand, Indonesia, Malaysia, Singapore, Brazil, Chile, and Columbia, etc..

We are currently increasing our effort in developing the international market, and have appointed distributors and agents in over 80 countries and regions, including Russia, Spain, Turkey, South Africa, Iran, Dubai, Vietnam, Thailand and Brazil, etc. Our next step in marketing is to establish more offices in the Middle East, Southeast Asia, EU, Africa and America, and we sincerely invite all interested parties to join us to create a new world brand.



◎ Warom in OGA



◎ Warom in ADIPEC



◎ LED lighting, LCS, DB, JB, FLT, IRPC UHV project–Thailand –SK & GS



◎ Complex Lighting Improvement Project (CLIP) at Petrona Gas Processing Santong

1

Basics of Explosion Protection
Explosion Protection
Classification of Zones

Flammable gases, mists and dusts, together with oxygen, form explosive atmospheres. Ignition of such atmospheres may cause serious damage to personnel and equipments.

Explosion takes place in the condition of the following factors:
- flammable substances (gas, vapour, mist or dust) in a suitable distribution and concentration
- oxygen(from the air)
- ignition source

An explosive atmosphere occurs if the substance-air mixture lies within a certain concentration range, which is defined as Explosion Limits. Explosion limits depend on the ambient pressure and oxygen concentration of the air.

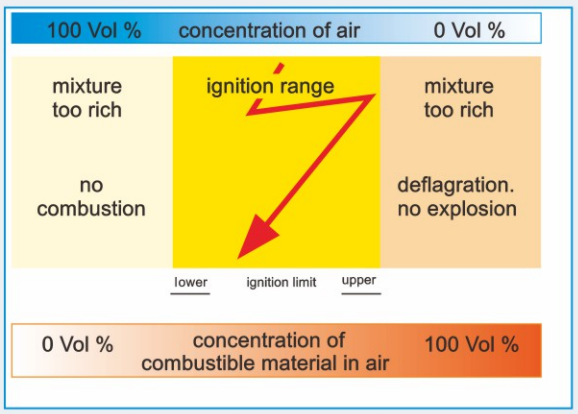

Explosion Protection

In order to avoid explosions and consequential dangers, the operator must incorporate effective explosion protection precautions into plant.

The principle of full explosion requires that explosion protection measures be taken in the following order.
- Measure to prevent formation of dangerous explosive atmospheres.
- Measure to prevent ignition of dangerous explosive atmospheres.
- Measure to restrict the effects of explosion to a safe level.

Distinguished as:
- Primary explosion protection:
  All measures to prevent the formation of explosive atmosphere
- Secondary explosion protection:
  All measures to restrict the effects of explosion to an insignificant level
- Explosion protection
  minimize explosion effects

Classification of Zones

Hazardous areas are classified into Zones, depending on the composition and presence of an explosive atmosphere. This enables both selection of suitable equipment and appropriate electrical installation.
Electrical apparatus for use in hazardous areas are assigned to various categories. The additional character G (gas) or D (dust) specifies whether the electrical apparatus may be installed in gas or dust hazardous areas.

Classification of Zones and use of equipment
Zone 0 Equipment with type test certificate
Zone 1 Equipment with type test certificate
Zone 2 Equipment complying with the basic requirements of Directive 2014/34/EU (Equipment certified for Zone 0 and 1 can also be used)

Zone in accordance with EC directive 1999/92/EC	Presence of potential explosive atmospheres	Safety level of equipment	Equipment category in accordance with EC directive 2014/34/EU
Zone 0 Zone 20	continuous or long-term or frequent	Very high level of protection	Category 1G Category 1D
Zone 1 Zone 21	occasional	high level of protection	Category 2G Category 2D
Zone 2 Zone 22	infrequent and short-term	normal level of protection General	Category 3G Category 3D

Temperature Classes

Ignition temperature is the lowest temperature of a surface at which an explosive atmosphere ignites on it. Flammable vapours and gases can be classified into temperature classes according to their ignition temperature.

The maximum surface temperature of a piece of equipment must always be lower than the ignition temperature of the gas-air mixture or vapour-air mixture in which it is placed.

Temperature Classes to IEC

Temperature class IEC/EN NEC 505-10	Maximum permissible surface temperature of the equipment (℃)	Ignition temperature of flammable substances (℃)	Temperature class NEC 500-3 CEC 18-052
T1	450	＞450	T1
T2	300	300＜t≤450	T2
	280	280＜t≤300	T2A
	260	260＜t≤280	T2B
	230	230＜t≤260	T2C
	215	215＜t≤230	T2D
T3	200	200＜t≤215	T3
	180	180＜t≤200	T3A
	165	165＜t≤180	T3B
	160	160＜t≤165	T3C
T4	135	135＜t≤160	T4
	120	120＜t≤135	T4A
T5	100	100＜t≤120	T5
T6	85	85＜t≤100	T6

Explosion Groups

Explosion protected electrical equipment is divided into 2 groups:
Group I Electrical equipment for mining
Group II Electrical equipment for all other hazardous areas

Electrical equipment of group II is further subdivided in groups IIA, IIB and IIC, depending on the danger level of the gas or vapour atmosphere in which they are operated. Equipment of group IIC is suitable for use in the most dangerous atmospheres.

Examples of the Classification of Gases and Vapours into Explosion Groups and Temperature Classes

	T1	T2	T3	T4	T5	T6
I	Methane					
IIA	Acetone Ethane Ethyl acetate Ammonia Benzene(pure) Acetic acid Carbon monoxide Methane Methanol Propane Toluene	Methyl alcohol i-amyl acetate n-butane n-butyl alcohol	Gasoline Diesel fuel aviation fuel Heating oils n-hexane	Acetaldehyde Ethyl ether		
IIB	Town gas (coal gas)	Ethylene				
IIC	Hydrogen	Acetylene			Carbon disulphide	

There is no classification of dust material into temperature classes or explosion groups. This means that the respective values are to be taken into account. The minimum ignition energy E_{min} (of a gas-air mixture) is the energy of an electrical spark that is capable of igniting the most critical (highest ignition performance) mixture under defined test conditions. Ignition temperature T_{ign} (of a gas-air mixture) is the lowest temperature of a hot wall surface at which the mixture is ignited after short-term contact. The glow temperature T_{glow} (of a dust layer) is the lowest temperature of a hot surface on which ignition occurs in a 5mm thick layer of dust.

The maximum surface temperature of the equipment must be compared with the ignition temperature, and the glow temperature should also be taken into account as safety factor:

- temperature limit regarding dust clouds:
$T_{max}=2/3\ T_{ign}$
- temperature limit regarding dust layers:
$T_{max} = T_{glow}$ -75k (5mm dust layer)

The lower of the two values above represents the maximum permissible surface temperature of the equipment

Protection Methods for Potentially Explosive Gas/Vapor Atmospheres

Type of protection	Code	Market	Application	Standard	Protection principle
General Requirements for Hazardous Locations	Ex	IEC	EPL Ga, Gb,&Gc	IEC 60079-0	
	Ex	China	EPL Ga, Gb,&Gc	GB 3836.1	
		US	Class I, Division I &2	FM 3600	
	AEx	US	Class I, Zone I &2	ISA 60079-0	
	Ex	CA	Class I, Zone I &2	CSA C22.2 No.60079-0	
	Ex	EU	Category 1G, 2G&3G	EN 60079-0	
Incareased Safety	Ex e (or Ex eb)	IEC	EPL Gb	IEC 60079-7	No arcs sparks or hot surfaces
	Ex e (or Ex eb)	China	EPL Gb	GB 3836.3	
	AEx e (or AEx eb)	US	Class I, Zone 1	ISA 60079-7	
	Ex e	CA	Class I, Zone 1	CSA C22.2 No.60079-7	
	Ex e (or Ex eb)	EU	Category 2G	EN60079-7	
Non-Incendive	(NI)	US	Class I, Division 2	ISA 12.12.01/FM 3611	
	(NI)	CA	Class I, Division 2	CSA C22.2 No.213	
Non-Sparking	Ex nA (or Ex nAc)	IEC	EPL Gc	IEC 60079-15	
	Ex nA (or Ex nAc)	China	EPL Gc	GB 3836.8	
	AEx nA (or AEx nAc)	US	Class I, Zone 2	ISA 60079-15	
	Ex nA	CA	Class I, Zone 2	CSA C22.2 No.60079-15	
	Ex nA (or Ex nAc)	EU	Category 3G	EN 60079-15	
Explosion-proof	(XP)	US	Class I, Division 1	UL 1203/FM 3615	Control the explosion and extinguish he flame
	(XP)	CA	Class I, Division 1	CSA C22.2 No.30	
Flame-proof	Ex d (or Ex db)	IEC	EPL Gb	IEC 60079-1	
	Ex d (or Ex db)	China	EPL Gb	GB 3836.2	
	AEx d (or AEx db)	US	Class I, Zone 1	ISA 60079-1	
	Ex d	CA	Class I, Zone 1	CSA C22.2 No.60079-1	
	Ex d (or Ex db)	EU	Category 2G	EN 60079-1	
Enclosed Break	Ex nC (or Ex nCc)	IEC	EPL Gc	IEC 60079-15	
	Ex nC (or Ex nCc)	China	EPL Gc	GB 3836.8	
	AEx nC (or AEx nCc)	US	Class I, Zone 2	ISA 60079-15	
	Ex nC	CA	Class I, Zone 2	CSA C22.2 No.60079-15	
	Ex nC (or Ex nCc)	EU	Category 3G	EN 60079-15	
Intrinsic Safety	Ex ia, ib, ic	IEC	EPL Ga, Gb, Gc	IEC 60079-11	Limit energy of sparks and surface temperature
	Ex ia, ib, ic	China	EPL Ga, Gb, Gc	GB 3836.4	
	(IS)	US	Class I, Division 1	UL 913/FM 3610	
	(IS)	CA	Class I, Division 1	CSA C22.2 No.157	
	AEx ia	US	Class I, Zone 0	ISA 60079-11/FM 3610	
	AEx ib	US	Class I, Zone 1	ISA 60079-11/FM 3610	
	Ex ia	CA	Class I, Zone 0	CSA C22.2 No.60079-11	
	Ex ib	CA	Class I, Zone 1	CSA C22.2 No.60079-11	
	Ex ia,ib,ic	EU	Category 1G, 2G, 2G	EN 60079-11	
	AEx ic	US	Class I, Zone 2	ISA 60079-11/FM 3610	
	Ex ic	CA	Class I, Zone 2	CSA C22.2 No 60079-11	

Protection Methods for Potentially Explosive Gas/Vapor Atmospheres

Type of protection	Code	Market	Application	Standard	Protection principle
Pressurization	Type X,Y	US	Class I, Division 1	FM 3620 (NFPA 496)	Keep flammable gas out
	Type X,Y	CA	Class I, Division 1	NFPA 496	
	Type Z	US	Class I, Division 2	FM 3620 (NFPA 496)	
	Type Z	CA	Class I, Division 2	NFPA 496	
	Ex px(or Ex pxb)	IEC	EPL Gb	IEC 60079-2	
	Ex px(or Ex pxb)	China	EPL Gb	GB 3836.5	
	AEx px(or AEx pxb)	US	Class I, Zone 1	ISA 60079-2	
	Ex px	CA	Class I, Zone 1	CSA C22.2 No.60079-2	
	Ex px (or Ex pxb)	EU	Category 2G	EN 60079-2	
	Ex py (or Ex pxb)	IEC	EPL Gb	IEC 60079-2	
	Ex py (or Ex pxb)	China	EPL Gb	GB 3836.5	
	AEx py(or AEx pxb)	US	Class I, Zone 1	ISA 60079-2	
	Ex py	CA	Class I, Zone 1	CSA C22.2 No.60079-2	
	Ex py (or Ex pyb)	EU	Category 2G	EN 60079-2	
	Ex pz (or Ex pzb)	IEC	EPL Gc	IEC 60079-2	
	Ex pz (or Ex pzb)	China	EPL Gc	GB 3836.5	
	AEx pz (or AEx pzb)	US	Class I, Zone 2	ISA 60079-2	
	Ex pz (or Ex pzb)	CA	Class I, Zone 2	CAS C22.2 No.60079-2	
	Ex pz (or Ex pzb)	EU	Category 3G	EN 60079-2	
Restrictes Breathing	Ex nR (or Ex nRc)	IEC	EPL Gc	IEC 60079-15	
	Ex nR (or Ex nRc)	China	EPL Gc	GB 3836.8	
	AEx nR(or AEx nRc)	US	Class I, Zone 2	ISA 60079-15	
	Ex nR	CA	Class I, Zone 2	CSA C22.2 No.60079-15	
	Ex nR (or Ex nRc)	EU	Category 3G	EN60079-15	
Encapsulation	Ex ma, mb, mc	IEC	EPL Ga, Gb, Gc	IEC 60079-18	
	Ex ma, mb, mc	China	EPL Ga, Gb, Gc	GB 3836.9	
	Ex ma, mb, mc	EU	Category 1G, 2G, 3G	EN 60079-18	
	AEx ma	US	Class I, Zone 0	ISA 60079-18	
	Ex ma	CA	Class I, Zone 0	CSA C22.2 No.60079-18	
	Aex mb	US	Class I, Zone 1	ISA 60079-18	
	Ex mb	CA	Class I, Zone 1	CSA C22.2 No.60079-18	
	AEx mc	US	Class I, Zone 2	ISA 60079-18	
	Ex mc	CA	Class I, Zone 2	CSA C22.2 No.60079-18	
Oil Immersion	Ex o (or Ex ob)	IEC	EPL Gb	IEC 60079-6	
	Ex o (or Ex ob)	China	EPL Gb	GB 3836.6	
	AEx o (or AEx b)	US	Class I, Zone 1	ISA 60079-6	
	Ex o	CA	Class I, Zone 1	CSA C22.2 No.60079-6	
	Ex o (or Ex ob)	EU	Category 2G	EN60079-6	
Powder-Filling	Ex q (or Ex qb)	IEC	EPL Gb	IEC 60079-5	
	Ex q (or Ex qb)	China	EPL Gb	GB 3836.7	
	AEx q (or AEx qb)	US	Class I, Zone 1	ISA 60079-5	
	Ex q	CA	Class I, Zone 1	CSA C22.2 No.60079-5	
	Ex q (or Ex qb)	EU	Category 2G	EN 60079-5	

Protection methods for combustble/ignitable dust atmospheres(including fiber and flyings)

Type of protection	Code	Market	Application	Standard	Protection principle
General Requirements	Ex	IEC	EPL Da, Db, &DC	IEC 60079-0	
	Ex	China	EPL Da, Db, &DC	GB 12476.1	
		US	Class II, Division 1&2	FM 3600	
		US	Class III, Division 1&2	FM 3600	
	AEx	US	Zone 20, 21, &22	ISA 61241-0	
	Ex	EU	Category 1D, 2D&3D	EN 60079-0	
	Ex	CA	Class II/ III	CSA C22.2 No.60079-0	
Dust-Ignitionproof	(DIP)	US	Class II, Division 1	UL 1203/FM 3616	Keep combustinle dust out
		CA	Class II, Division 1	CSA C22.2 No.25	
Dust-Protected	(NI)	US	Class II, Division 2	ISA 12.12.01/FM 3611	
		CA	Class II, Division 2	CSA C22.2 No.25	
Protection by Enclosure	Ex ta, tb, tc	IEC	EPL Da, Db, Dc	IEC 60079-31	
	Ex tD	China	EPL tD	GB 12476.5	
	Ex ta, tb, tc	EU	Category 1D, 2D, 3D	EN 60079-31	
	AEx ta	US	Zone 20	ISA 60079-31	
	AEx tb	US	Zone 21	ISA 60079-31	
	Ex ta, tb, tc	US	Zone 22	ISA 60079-31	
		CA	Class II/III, Division 1	CSA C22.2 No.60079-31	
Fiber & Fiying Protection	(DIP)	US	Class III, Division 1&2	ISA 12.12.01/FM 3611	
		CA	Class III, Division 1&2	CSA C22.1	
Encapsulation	Ex maD, mbD, mcD	IEC	EPL Da, Db, Dc	IEC 61241-18	
	Ex maD, mbD, mcD	China	EPL Da, Db, Dc	GB 12476.6	
	AEx ma	US	Zone 20	ISA 60079-18	
	Ex ma	CA	Class II/III, Division 1	CSA C22.2 No.60079-18	
	Ex ma, mb, mc	EU	Category 1D, 2D, 3D	EN 60079-18	
	AEx mb	US	Zone 21	ISA 60079-18	
	Ex mb	CA	Class II/III, Division 1	CSA C22.2 No.60079-18	
	AEx mc	US	Zone 22	ISA 60079-18	
	Ex mc	CA	Class II/III, Division 2	CSA C22.2 No.60079-18	
Pressurization	Ex pD	IEC	EPL Db	IEC 61241-4	Limit energy of sparks and surface temperature
	Ex pD	China	EPL Db	GB 12476.7	
	AEx pD	US	Zone 21	ISA 61241-2	
	Ex pD	EU	Category 2D	EN 61241-4	
	(px)	US	Class II, Division 1	FM 3620 (NFPA 496)	
	(px)	CA	Class II, Division 1	NFPA 496	
	(px)	US	Class II, Division 1	FM 3620 (NFPA 496)	
	(px)	CA	Class II, Division 1	NFPA 496	
	(px)	US	Class II, Division 2	FM 3620 (NFPA 496)	
	(px)	CA	Class II, Division 2	NFPA 496	
Intrinsic Satety	Ex iaD, ibD, icD	IEC	EPL Da, Db, Dc	IEC 61241-11	
	Ex iaD, ibD, icD	China	EPL Da, Db, Dc	GB 12476.4	
	AEx ia	US	Zone 20	ISA60079-11	
	Ex ia	CA	Class II/III, Division 1	CSA C22.2 No.60079-11	
	Ex ia, ib, ic	EU	Category 1D, 2D, 3D	EN 60079-11	
	AEx ib	US	Zone 21	ISA 60079-11	
	Ex ib	CA	Class II/III, Division 2	CSA C22.22 No.60079-11	
	AEx ic	US	Zone 2	ISA 60079-11	
	Ex ic	CA	Class II/III, Division 2	CSA C22.2 No.60079-11	
	(IS)	US	Class II, Division 1	UL 913/FM 3610	
	(IS)	CA	Class II, Division 1	CSA C22.2 No.157	
	(IS)	US	Class II, Division 1	FM3610	
	(IS)	CA	Class II, Division 1	CSA C22.2 No.157	

Introduction of NEC Standards

NEC505	NEC500
Class I Zone 1 A Ex db IIC T5 Gb	Class I Division 1 Groups A B C D T5
Permitted Class	Permitted Class
Permitted Zone	Permitted Division
American Standard	Gas Group
American National Standards Institute (ANSI)	Temperature Class
Explosion Protection	
Method of Protection	
Gas Group	
Temperature Class	
EPL	

Area Classification

	Flammable Material Present Continuously	Flammable Material Present Intermittently	Flammable Material Present Abnormally
IEC/EU	Zone 0	Zone 1	Zone 2
US NEC 505	Zone 0	Zone 1	Zone 2
US NEC 500	Division 1		Division 2

Gas Groupings

Gas, dust or Flber	IEC / Europe Canada (CEC)	USA NEC (505)	Canada (CEC) USA NEC (500)
Acetylene	Group IIC	Class I, Group IIC	Class I, Group A
Hydrogen			Class I, Group B
Ethylene	Group IIB	Class I, Group IIB	Class I, Group C
Propane	Group IIA	Class I, Group IIA	Class I, Group D
Methane	Group I	Class I, Group IIA	Class I, Group D
Metal Dust	Group IIIC		Class II, Group E (Div 1 only)
Coal Dust	Group IIIB		Class II, Group F
Grain	Group IIIB		Class II, Group G
Fibres	Group IIIA		Class II, Group H

Hazardous (classified) Locations Class I locations are those in which flammable gases or vapors are or may be present in the air in quantities sufficient to produce explosive or ignitable mixtures.	Hazardous (classified) Locations Class I Class I locations are those in which flammable gases or vapors are or may be present in the air in quantities sufficient to produce explosive or ignitable mixtures. Class II Class II locations are those that are hazardous because of the presence of combustible dust Note that the dust must be present in sufficient quantities for a fire or explosion hazard to exist Class III Class III locations are those that are hazardous because of the presence of easily ignitable fibers or flyings but in which the fibers or flyings are not likely to be in suspension in the air in quantities sufficient to produce ignitable mixtures. Easily ignitable fibers and flyings present a fire but not an explosion hazard
Zone 0 These are locations in which ignitable concentrations of flammable gases or vapors are present continuously or for long periods of time. Zone 0 represents the most dangerous part of the Division 1 classification. Zone 1 These locations are almost the same as Class I, Division 1 locations in the class, division system except they do not include those locations defined as Class I, Zone 0, where ignitable concentrations are present all or most of the time. Zone 2 These locations are the same as Class I, Division 2 locations in the class, division system.	Class I, Division 1 Class I, Division 1 locations are those where the explosion hazard exists under normal operating conditions. The area may be hazardous all or most of the time or it may only be hazardous some of the time. Class I, Division 2 Class I, Division 2 locations are those where ignitable concentrations of flammable gases or vapors are not normally present, but could be present in the event of a fault, such as a leak at a valve in a pipeline carrying flammable liquids.
Gas group IIA IIB IIC	Gas group Groups A B C D

Certification and Marking

Only appropriately certified and marked units may be used in hazardous areas.

EU-Directive	2014/34/EU
Validity	From 01.03.1996
Range of validity for equipment in hazardous areas	• all equipment and protection systems • gases, vapours and dusts • including mining
QM system of manufacturer	• QM certificate of a notified body
Certificate of conformity	Manufacturers' s declaration of conformity on the basis of the type examination

Marking laid down by the directives and the standards

Name or marking of the manufacturer	WAROM	
Type marking (e.g.)	BXM(D)53	
Address	No.555 Baoqian Road, Jiading, Shanghai, China	
Marking of explosion protection	Ex db eb IIC T6 Gb	
	Ex tb IIIC T80℃ Db IP66	
	Ex	CENELEC marking
	d, e, ib, [ib], tb…[1])	Protection types
	IIC	Explosion groups (for gases)
	IIIC	Explosion groups(for dusts)
	T6, T80℃	Temperature class
	Gb, Db	Protection degree
Distinguishing symbol of the EC with indication of the category	Ⓔx II 2 G D	
	Ⓔx	Mark according to EC Directive
	II	Group of equipment
	2	Category of equipment
	G, D	G: gases, vapours or mists; D: dusts
Test station, No. of certificate	IECEx CQM 11.0042X	
CE-Mark, No. of testing authority	0102	
Electrical data	V, A, W, Hz	
Ambient temperature	-40℃~ +60℃	
Degree of protection	IP66	

1) ib for intrinsically safe apparatus, [ib] for associated apparatus
2) with…X if special conditions are indicated for use, etc.
with…U for Ex-components

Basics of Dust-proof & Water-proof

Ingress Protection(IP)Codes

The first figure-Protection against solid bodies	
0	Non-protection
1 Φ50mm	Prevent the solid strange particles, of which size is more than 50mm.
2 Φ12.5mm	Prevent the solid strange particles, of which size is more than 12mm.
3 Φ2.5mm	Prevent the solid strange particles, of which size is more than 2.5mm.
4 Φ1mm	Prevent the solid strange particles, of which size is more than 1mm.
5	Dustproof
6	Dust-sealed

The second figure-Protection against water	
0	Brief statement
1	Non-protection Drop-proof
2	15° Drop-proof
3	Showering waterproof
4	Splashing waterproof
5	Spraying waterproof
6	Wave-proof
7	Effect of soaking in water proof
8	Effect of diving-proof

* The waterproof dustproof in accordance with the above schematic diagram.

NEMA/CSA/UL Enclosure Types

Type	Application	Abbreviated Definition
1	Indoor	General Purpose
2	Indoor	Protection against angled dripping water
3, 3R, 3S	Indoor/Outdoor	Protection against rain,snow
4,4X	Indoor/Outdoor	Protection against rain, snow, hose directed water
5	Indoor	Protection against angled dripping water, dust, fibers, flyings
6	Indoor/Outdoor	Protection against temporary submersion
6P	Indoor/Outdoor	Protection against prolonged submersion
12, 12K	Indoor	Protection against circulating dust, fibers, flyings
13	Indoor/Outdoor	Protection against circulating dust, fibers, flyings, see page

1

Schematic Diagram of Field Installation

The drawing simulates installed explosion-proof equipment with cable wiring on site, meeting IEC 60079 and NEC505 standards. It is designed as reference for user to select and install explosion-proof equipment.

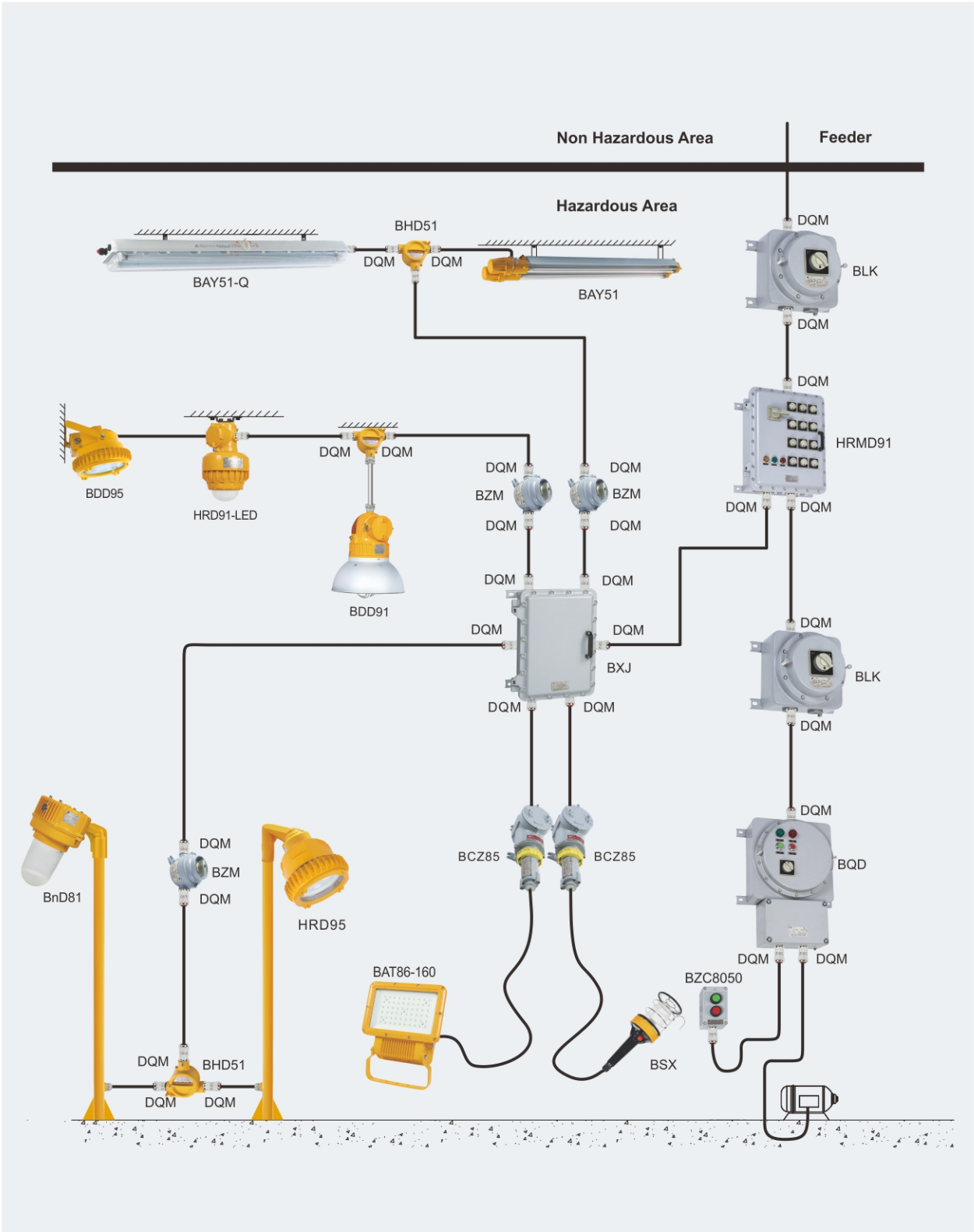

Schematic Diagram of Field Installation

The drawing simulates installed explosion-proof equipment with steel pipe wiring on site, meeting IEC 60079 and NEC505 standards. It is designed as reference for user to select and install explosion-proof equipment.

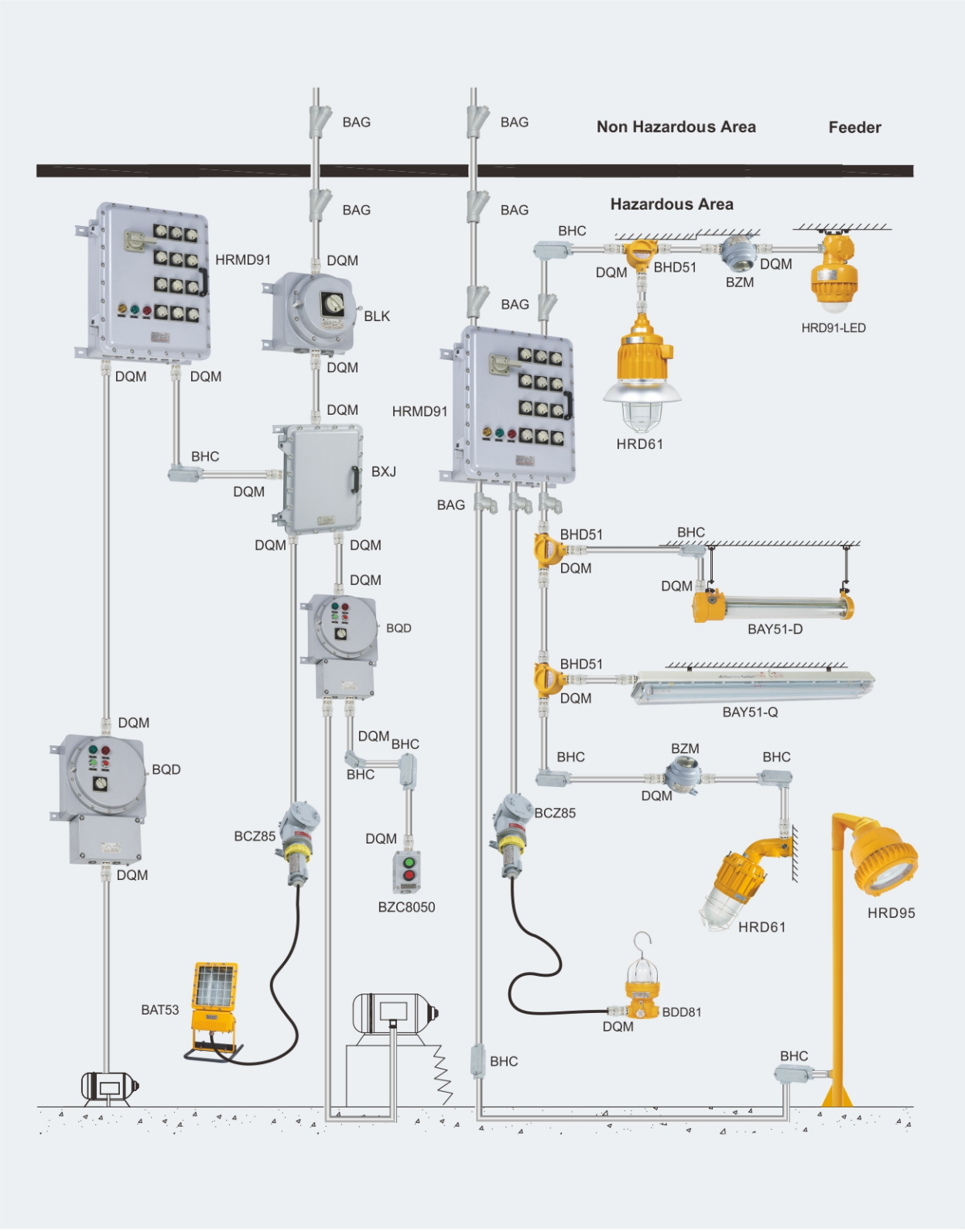

Technical Data of Lamp

Notice:

1. Except incandescent lamp and self ballast high pressure mercury lamp, other lamps such as high pressure mercury lamp, high pressure sodium lamp and metal halide lamp shall work with ballasts.
2. The lamps with matching ballasts shall work effectively to reach the longest service life.
   - Metal halide lamp is classified into HPI metal halide lamp (European standard) and MH metal halide lamp (American standard). They shall work with different ballasts respectively and it is also not allowed to interchange the ballasts.
3. Lamp codes in this catalogue as below:
   - Incandescent lamp: A
   - Self ballast high pressure mercury lamp: SME
   - High pressure mercury lamp: HME
   - Metal halide lamp: HIE
   - High pressure sodium lamp: HSE

T8 Standard straight-tube fluorescent lamp (Bi-Pin)

Picture	Lamp power (W)	Colour	Colour temperature (K)	Luminous flux (lm)	Lamp holder	Average life (h)	Diameter (mm)	Length (mm)	Data based on
	18	Cool white	6200	1050	G13	13000	26	604	Philips
	36	Cool white	6200	2500	G13	13000	26	1214	Philips
	58	Cool white	6200	4000	G13	13000	26	1514	Philips

T8 Tri-phosphor straight-tube fluorescent lamp (Bi-Pin)

Picture	Lamp power (W)	Colour	Colour temperature (K)	Luminous flux (lm)	Lamp holder	Average life (h)	Diameter (mm)	Length (mm)	Data based on
	18	Cool white	6500	1300	G13	15000	26	604	Philips
	36	Cool white	6500	3250	G13	15000	26	1214	Philips
	58	Cool white	6500	5000	G13	15000	26	1514	Philips

Self ballast high pressure mercury lamp

Picture	Lamp power (W)	Power supply (V AC)	Working current (A)	Luminous flux (lm)	Lamp holder	Average life (h)	Diameter (mm)	Length (mm)	Data based on
	125	220	0.60	1650	E27	10000	75	168	OSRAM
	150	220	0.80	3100	E27	13000	76	177	OSRAM
	250	220	1.20	5600	E40	10000	91	232	OSRAM
	500	220	2.40	14000	E40	10000	122	287	OSRAM

High pressure mercury lamp

Picture	Lamp power (W)	Power supply (V AC)	Working voltage (V)	Working current (A)	Luminous flux (lm)	Lamp holder	Average life (h)	Diameter (mm)	Length (mm)	Data based on
	80	220	110	0.80	3800	E27	16000	71	155	OSRAM
	125	220	115	1.15	6300	E27	16000	76	177	OSRAM
	250	220	130	2.13	13000	E40	16000	91	228	OSRAM
	400	220	135	3.25	22000	E40	16000	122	290	OSRAM

Technical Data of Lamp

High pressure sodium lamp

Picture	Lamp power (W)	Power supply (V)	Working voltage (V)	Working current (A)	Luminous flux (lm)	Lamp holder	Average life (h)	Diameter (mm)	Length (mm)	Data based on
	70	220	90	1.00	6600	E27	28000	71	156	OSRAM
	100	220	100	1.20	10200	E27/E40	32000	76	186	OSRAM
	150	220	100	1.80	17000	E40	32000	91	227	OSRAM
	250	220	105	2.85	31100	E40	32000	91	227	OSRAM
	400	220	105	4.50	55500	E40	32000	122	290	OSRAM
	70	220	93	0.98	6600	E27	28000	39	156	Philips
	100	220	100	1.20	10700	E27/E40	32000	47	210	OSRAM
	150	220	100	1.80	18000	E40	32000	47	211	Philips
	250	220	100	3.00	33200	E40	32000	47	257	Philips
	400	220	100	4.50	56500	E40	32000	47	283	Philips
	1000	220	105	10.60	130000	E40	16000	66	390	Philips

Metal halide lamp (European standard)

Picture	Lamp power (W)	Power supply (V)	Working voltage (V)	Working current (A)	Luminous flux (lm)	Lamp holder	Average life (h)	Diameter (mm)	Length (mm)	Data based on
	70	220	90	0.90	5800	E27	20000	56	141	Philips
	100	220	90	1.10	8700	E27	20000	56	141	Philips
	150	220	100	1.80	13500	E27	20000	56	141	Philips
	250	220	100	2.15	23200	E40	20000	91	228	Philips
	400	220	100	3.25	42000	E40	20000	122	280	Philips
	250	220	128	2.20	25000	E40	20000	47	257	Philips
	400	220	125	3.40	42500	E40	20000	47	286	Philips
	1000	220	130	8.25	85000	E40	12000	66	382	Philips

Metal halide lamp (American standard)

Picture	Lamp power (W)	Working voltage (V)	Working current (A)	Luminous flux (lm)	Lamp holder	Average life (h)	Diameter (mm)	Length (mm)	Data based on
	70	85	0.98	5600	E27	10000	56	141	Philips
	100	100	1.1	9000	E27	10000	56	141	Philips
	150	95	1.8	13500	E27	10000	56	141	Philips

Note: Please specify the specification of lamp holder when ordering.

Technical Data of Lamp

Wiring diagram of European standard HID lamp and ballast

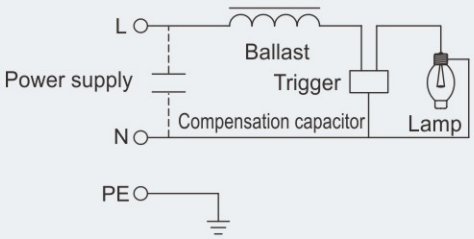

HSE, HIE

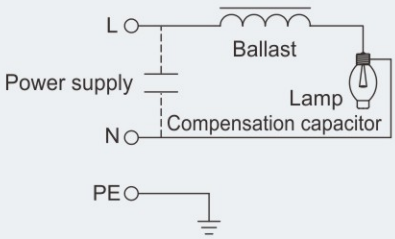

HME

Selection table of European standard HID lamp and corresponding electrical components

Lamp type	Lamp power(W)	Lamp holder	Ballast	Trigger	Capacitor
HSE	70	E27	HSE70	CD-7h	12μF
HSE	100	E27	HSE100	CD-7h	15μF
HSE	150	E40	HSE150	CD-7h	20μF
HSE	250	E40	HSE250	CD-7h	32μF
HSE	400	E40	HSE400	CD-7h	50μF
HSE	1000	E40	HSE1000	SN56	2 x 50μF
HIE	70	E27	HIE70	CD-7h	12μF
HIE	100	E27	HIE100	CD-7h	15μF
HIE	150	E27	HIE150	CD-7h	20μF
HIE	175	E40	HIE175	CD-7h	20μF
HIE	250	E40	HIE250	CD-7h	20μF
HIE	400	E40	HIE400	CD-7h	32μF
HIE	1000	E40	HIE1000	SI51Plus	2 x 32μF
HME	80	E27	HME80	——	8μF
HME	125	E27	HME125	——	12μF
HME	175	E40	HME175	——	15μF
HME	250	E40	HME250	——	20μF
HME	400	E40	HME400	——	32μF



Ballast

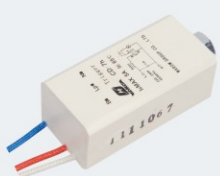

Trigger



Capacitor

Wiring diagram of American standard HID lamp and ballast

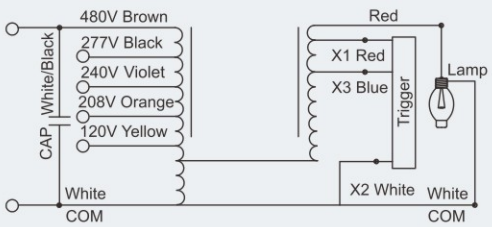

HX circuit for HSE: 50W, 70W, 100W, 150W

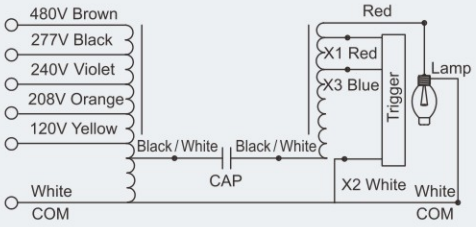

CWA-1 circuit for HIE: 70W, 100W, 150W

HSE: 250W, 400W, 600W, 1000W

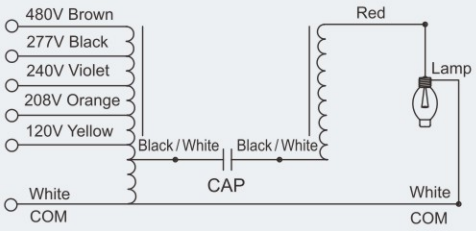

CWA-2 circuit for HIE: 175W, 250W, 400W, 1000W

Selection table of American standard HID lamp and corresponding electrical components

Lamp type	Power (W)	Lamp	Ballast	Voltage	Circuit	Trigger	Capacitor
HSE	50	S68	120560HPS50LTH	120/208/240/277/480V 60Hz	HX	IG-3MHL	CS-2/540V
HSE	70	S62	120560HPS70LTH	120/208/240/277/480V 60Hz	HX	IG-3MHL	CS-3/540V
HSE	100	S54	120560HPS100LTH	120/208/240/277/480V 60Hz	HX	IG-3MHL	CS-4/540V
HSE	150	S55	120560HPS150LTH	120/208/240/277/480V 60Hz	HX	IG-3MHL	CS-5/540V
HSE	250	S50	120560HPS250LTI	120/208/240/277/480V 60Hz	CWA-1	IG-3MCM	CC-33/250V
HSE	400	S51	120560HPS400LTI	120/208/240/277/480V 60Hz	CWA-1	IG-3MCM	CC-55/250V
HSE	600	S106	120560HPS600LTI	120/208/240/277/480V 60Hz	CWA-1	IG-3MCM	CC-55/250V
HSE	1000	S52	120560HPS1000LTI	120/208/240/277/480V 60Hz	CWA-1	IG-3MCH	CS-26/540V
HIE	70	M98	120560MH70LTI	120/208/240/277/480V 60Hz	CWA-1	IG-3MCL	CC-10/300V
HIE	100	M90	120560MH100LTI	120/208/240/277/480V 60Hz	CWA-1	IG-3MCL	CC-12/300V
HIE	150	M102	120560MH150LTI	120/208/240/277/480V 60Hz	CWA-1	IG-3MCL	CC-18/300V
HIE	175	M57	120560MH175LTC	120/208/240/277/480V 60Hz	CWA-2	——	CS-12/540V
HIE	250	M58	120560MH250LTC	120/208/240/277/480V 60Hz	CWA-2	——	CS-15/540V
HIE	400	M59	120560MH400LTC	120/208/240/277/480V 60Hz	CWA-2	——	CS-24/540V
HIE	1000	M47	120560MH1000LTC	120/208/240/277/480V 60Hz	CWA-2	——	CS-24/540V

Note: Above table shows the capcitance of ballasts of 60Hz, and the capcitance of ballasts of 50Hz is different with this table, please specify when ordering



Ballast



Trigger



Capacitor

2



Lighting Technology

Light Fittings for Fluorescent Lamp

BAY51-Q Series Explosion-proof Light Fittings for Fluorescent Lamp (Ex db eb q IIC, Ex d e q IIC)	2/2
BAY51-Q LED Series Explosion-proof Light Fittings (Ex db eb IIC, Ex db eb q IIC, Ex db eb mb IIC)	2/8
BAY51 Series Explosion-proof Light Fittings for Fluorescent Lamp (Ex d IIC)	2/16
BAY51-D Series Explosion-proof Light Fittings (Ex db IIB+H_2, Ex db IIB)	2/26
HRY92-LED Series Explosion-proof Light Fittings (Ex db IIB+H_2, Ex db IIB)	2/32
HRY97 Series Explosion-proof LED Light Fittings (Ex db eb mb IIC)	2/36
BnY81 Series Explosion-proof Light Fittings for Fluorescent Lamp (Ex nA IIC)	2/40
BnY81-LED Series Explosion-proof Light Fittings (ec type) (Ex ec mb IIC, Ex db ec mb IIC)	2/46
HRY51-G/C LED Series Explosion-proof Light Fittings (Ex db eb IIC, Ex db eb q IIC, Ex db eb mb IIC)	2/50

LED Light Fittings

HRD91-LED Series Explosion-proof LED Lightings (Ex db IIC)	2/56
HRD95 Series Explosion-proof LED Lightings (Ex db op is IIC)	2/60
HRD97 Series Explosion-proof LED Lightings (Ex db IIC)	2/66
HRD99 Series Explosion-proof LED Lightings (Ex db IIB, Ex db IIC)	2/70
HRJ Series Explosion-proof Emergency LED Light Fittings (Ex db op is IIC)	2/74
BDD95 Series Explosion-proof LED Lightings (Ex db eb op is IIC)	2/78
BAT86 Series Explosion-proof LED Floodlights (Ex db IIB+H_2, Ex db IIB)	2/84

Contents

HRND95 Series Explosion-proof LED Lightings (Ex ec mc IIC, Ex nR IIC) 2/90
HRNT95 Series Explosion-proof LED Floodlights (Ex ec mc IIC, Ex nR IIC) 2/94
HRT97 Series Explosion-proof LED Floodlights (Ex ec mc IIC) 2/98
HRT99 Series Explosion-proof LED Floodlights (Ex db eb IIC) 2/102

Pendant Light Fittings

HRD61 Series Explosion-proof Light Fittings (Ex db IIC, Ex d IIC) 2/106
BDD81 Series Explosion-proof Lightings (Ex d IIC) 2/114
BDD91 Series Explosion-proof Light Fittings (Ex d IIC) 2/116
BnD81 Series Explosion-proof Light Fittings (Ex nR IIC) 2/124

Floodlights

BAT53 Series Explosion-proof Floodlights (Ex d e IIB, Ex d IIB) 2/132
BAT85 Series Explosion-proof Floodlights (Ex db IIC) 2/138
BnT81 Series Explosion-proof Floodlights (Ex nR IIC) 2/142

Street Lamps / Hand Lamps

Explosion-proof Street Lamps (Ex d e IIB, Ex d e IIC, Ex nR IIC, Ex d IIC) 2/146
BAM52 Series Explosion-proof LED Street lamps (Ex nR IIC) 2/148
BAM52 Series Explosion-proof Street lamps (Ex nR IIC) 2/150
HRD305 Portable Searchlight (Ex d ia IIC) 2/154
HRD309E Searchlight (Ex nA nR IIC) 2/155
HRD503 Series Explosion-proof Maintenance Lamps (Ex db eb IIC) 2/156
BSX-60 Series Explosion-proof Incandescent Hand Lamps (Ex d e IIC) 2/157

Local, Caution Spotlight Fittings

BAJ52-20 Series Explosion-proof Emergency Light Fittings (Ex d IIB) 2/158
BAJ52-6 Series Explosion-proof Emergency Light Fittings (Ex db IIC) 2/160
BAYD85 Series Explosion-proof Emergency Exit Light Fittings (Ex db IIB, Ex db IIC) 2/162
BAYD86 Series Explosion-proof Emergency Exit Light Fittings (Ex mb eb ib IIC) 2/164
BAK51 Series Explosion-proof Tank Inspection Vessel Light Fittings (Ex db IIB) 2/166
BAK85 Series Explosion-proof LED Tank Inspection Vessel Light Fittings (Ex db op is IIC) 2/168
BSZD81-E Series Explosion-proof Caution Spotlight Fittings (Ex d e IIC) 2/170
BSZD81-C Series Explosion-proof Caution Spotlight Fittings (Ex d e IIC) 2/172
BSZD85-E Series Explosion-proof Low Intensity Aircraft Warning Light (Ex db IIC) 2/174
BSZD85-C Series Explosion-proof Medium Intensity Aircraft Warning Light (Ex db eb ib IIC) 2/176
BBJ81 Series Explosion-proof Audio and Visual Caution Spotlight Fittings (Ex db ib IIC) 2/178
BJD81 Series Explosion-proof Caution Spotlight Fittings (Ex db IIC) 2/180
BBJ86 Series Explosion-proof Audio and Visual Caution Spotlight Fittings (Ex db IIC) 2/182

More products are under development. Please contact us or visit our website for the latest product development. We reserve the right to make alteration to the technical data, weight, dimensions, designs and products available without notice.

Light Fittings for Fluorescent Lamp

BAY51-Q Series Explosion-proof Light Fittings for Fluorescent Lamp



- Explosion Protection to
  -CENELEC
  -IEC
  -NEC
- Can be used in
  Zone 1 and Zone 2
  Zone 21 and Zone 22
  Class I, Zone 1 and Zone 2
  Class I, Division 2, Groups A, B, C, D
- Enclosure size: Type I and Type II
  Available lamp and power
  T8 Fluorescent Lamps: 18W x 1, 36W x 1, 18W x 2, 36W x 2
- Enclosure: GRP (glass fiber reinforced polyester).
  Diffuser: PC (polycarbonate).
- Ex e enclosure with explosion-proof components inside.
- Interlock function between enclosure and diffuser, switches off on opening.
- Built-in electronic ballast, power factor ≥0.95.
- Emergency unit with protections against overcharge and over-discharge.
- End of lamp life (EOL) rectification effect protection.

Catalogue number logic

BAY51-Q □ x □ □ □

- J: Emergency lighting (optional)
- Mounting
  - L: pole type
  - X: ceiling type
  - B: wall type
  - D: pendant chain type
  - G: pendant pole type
- Lamp number
- Lamp power (W)
- Explosion-proof light fittings for fluorescent lamp

Zones 1&2; 21&22

Technical data

Explosion-proof light fittings for fluorescent lamp BAY51-Q□×□□

Explosion protection	
Global (IECEx)	IECEx CQM 07.0007X
Gas and dust	Ex db eb q IIC T4 Gb Ex tb IIIC T85℃ Db
Europe (ATEX)	LCIE 12 ATEX 3045X
Gas and dust	Ⓔx II 2 G Ex db eb q IIC T4 Gb Ⓔx II 2 D Ex tb IIIC T85℃ Db
Certificates	IECEx; ATEX; CU-TR
Conformity to standards	EN 60079-0, EN 60079-1, EN 60079-5, EN 60079-7, EN 60079-31 IEC 60079-0, IEC 60079-1, IEC 60079-5, IEC 60079-7, IEC 60079-31
Material	
Enclosure	GRP, stands 7J impact, corrosion-proof
Diffuser	Polycarbonate, high light transmission, stands 7J impact
Ballast	Electronic ballast, power factor ≥0.95, with protection against short circuit, overload, lamp aging, lamp damage and dissymmetry power of lamp tube. Certificate No.: LCIE 06 ATEX 0003U; IECEx CQM 07.0005U
Exposed fastener	Stainless steel
Interlock	BZX-6 explosion-proof distance switch, switching off on opening Certificate No.: LCIE 06 ATEX 0002U, IECEx CQM 07.0006U
Lamp	
Lamp specification	T8 tube (supplied with the light fittings)
Lamp power (W)	36W x 2 18W x 2 36W x 1 18W x 1
Rated voltage	96~277V AC 50/60Hz, 100~250V DC
Degree of protection	IP66
Ambient temperature	-40℃~+60℃
Terminal	3 x 1.5~4mm^2 (L+N+PE)
Cable entries	2 x Φ26: 2 x M25 x 1.5 cable glands (DQM-I Ex e, plastic).
Available cable outer diameter	Φ9~Φ16 (mm)

Selection table

Type / Ordering code	Lamp power(W)	Weight(kg)	Type / Ordering code	Lamp power(W)	Weight(kg)
BAY51-Q18 x 1L	18 x 1	6.80	BAY51-Q18 x 2L	18 x 2	7.00
BAY51-Q18 x 1X	18 x 1	6.70	BAY51-Q18 x 2X	18 x 2	6.90
BAY51-Q18 x 1B	18 x 1	7.80	BAY51-Q18 x 2B	18 x 2	7.90
BAY51-Q18 x 1D	18 x 1	8.10	BAY51-Q18 x 2D	18 x 2	8.20
BAY51-Q18 x 1G	18 x 1	7.70	BAY51-Q18 x 2G	18 x 2	7.85
BAY51-Q36 x 1L	36 x 1	11.40	BAY51-Q36 x 2L	36 x 2	11.60
BAY51-Q36 x 1X	36 x 1	11.30	BAY51-Q36 x 2X	36 x 2	11.40
BAY51-Q36 x 1B	36 x 1	12.30	BAY51-Q36 x 2B	36 x 2	12.50
BAY51-Q36 x 1D	36 x 1	12.60	BAY51-Q36 x 2D	36 x 2	12.75
BAY51-Q36 x 1G	36 x 1	12.20	BAY51-Q36 x 2G	36 x 2	12.40

Note: Products above include all the mounting accessories listed in Mounting Accessories & Spare Parts Table (see P2/6~7).

Light Fittings for Fluorescent Lamp
BAY51-Q Series Explosion-proof Light Fittings for Fluorescent Lamp

Technical data

Explosion-proof emergency light fittings for fluorescent lamp BAY51-Q□ × □□J

Explosion protection	
Global (IECEx)	IECEx CQM 12.0002X
Gas and dust	Ex d e q IIC T4 Gb
	Ex tb IIIC T80℃ Db IP66
Europe (ATEX)	TÜV CY 18 ATEX 0206027X
Gas and dust	Ⓔx II 2 G Ex db e q IIC T4 Gb
	Ⓔx II 2 D Ex tb IIIC T80℃ Db IP66
Certificates	IECEx; ATEX; CU-TR
Conformity to standards	EN 60079-0, EN 60079-1, EN 60079-5, EN 60079-7, EN 60079-31
	IEC 60079-0, IEC 60079-1, IEC 60079-5, IEC 60079-7, IEC 60079-31
Material	
Enclosure	GRP, stands 7J impact, corrosion-proof
Diffuser	Polycarbonate, high light transmission, stands 7J impact
Ballast	Electronic ballast, with protection against short circuit, overload, lamp aging, lamp damage and dissymmetry power of lamp tube.
Emergency controller	BY-2 emergency controller, with protection against overcharge and overdischarge
	Certificate No.: LCIE 10 ATEX 3010U, IECEx CQM 11.0041U
Exposed fastener	Stainless steel
Lamp	
Lamp specification	T8 tube (supplied with the light fittings)
Lamp power (W)	36W x 2 18W x 2 36W x 1 18W x 1
Emergency power (W)	36W x 30%, 18W x 30%
Emergency starting time	0.3s
Charging time	24h
Emergency lighting time	120min (180min is optional)
Rated voltage	96~254V AC 50/60Hz
Degree of protection	IP66
Ambient temperature	-20℃~+55℃
Terminal	5 x 1.5~4mm^2 (L1+N1+L1'+N1'+PE)
Cable entries	2 x Φ26: 2 x M25 x 1.5 cable glands (DQM-I Ex e, plastic).
Available cable outer diameter	Φ9~Φ16 (mm)

Selection table

Type / Ordering code	Lamp power(W)	Weight(kg)	Type / Ordering code	Lamp power(W)	Weight(kg)
BAY51-Q18 x 1LJ	18 x 1	8.65	BAY51-Q18 x 2LJ	18 x 2	8.80
BAY51-Q18 x 1XJ	18 x 1	8.50	BAY51-Q18 x 2XJ	18 x 2	8.70
BAY51-Q18 x 1BJ	18 x 1	9.60	BAY51-Q18 x 2BJ	18 x 2	9.75
BAY51-Q18 x 1DJ	18 x 1	9.90	BAY51-Q18 x 2DJ	18 x 2	10.00
BAY51-Q18 x 1GJ	18 x 1	9.50	BAY51-Q18 x 2GJ	18 x 2	9.65
BAY51-Q36 x 1LJ	36 x 1	13.00	BAY51-Q36 x 2LJ	36 x 2	13.05
BAY51-Q36 x 1XJ	36 x 1	12.95	BAY51-Q36 x 2XJ	36 x 2	13.10
BAY51-Q36 x 1BJ	36 x 1	14.00	BAY51-Q36 x 2BJ	36 x 2	14.10
BAY51-Q36 x 1DJ	36 x 1	14.30	BAY51-Q36 x 2DJ	36 x 2	14.45
BAY51-Q36 x 1GJ	36 x 1	13.90	BAY51-Q36 x 2GJ	36 x 2	14.05

Note: Products above include all the mounting accessories listed in Mounting Accessories & Spare Parts Table (see P2/6~7).

Photometric data

BAY51-Q18x1□□

Lamp power (W)	Rated luminous flux (Lamp tube)	Luminaire efficiency
18 x 1	1300lm	72%

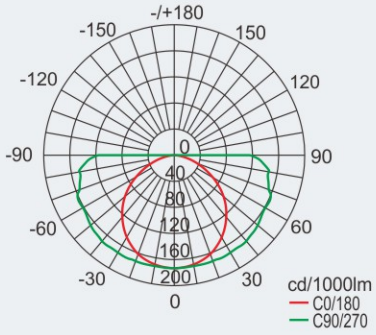

BAY51-Q18x2□□

Lamp power (W)	Rated luminous flux (Lamp tube)	Luminaire efficiency
18 x 2	2600lm	69%

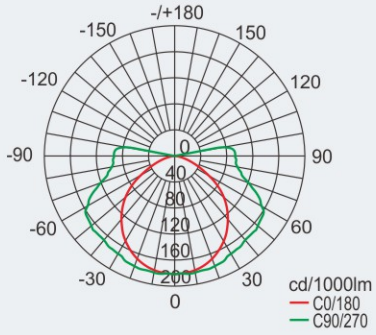

BAY51-Q36x1□□

Lamp power (W)	Rated luminous flux (Lamp tube)	Luminaire efficiency
36 x 1	3250lm	65%

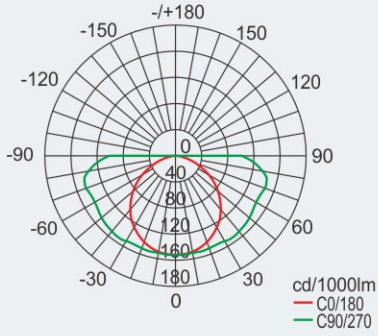

BAY51-Q36x2□□

Lamp power (W)	Rated luminous flux (Lamp tube)	Luminaire efficiency
36 x 2	6500lm	67%

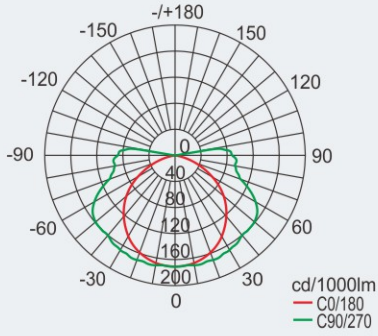

We can provide lighting design and data by professional lighting software DIALUX based upon simulated site situation on request.

Dimension drawings (all dimensions in mm) - subject to alteration

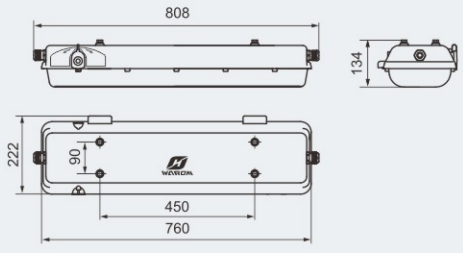

BAY51-Q18 x □ □ □

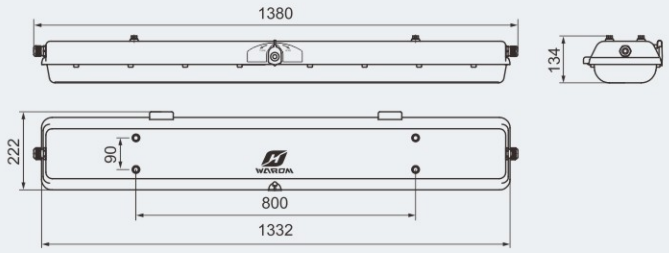

BAY51-Q36 x □ □ □

Light Fittings for Fluorescent Lamp
BAY51-Q Series Explosion-proof Light Fittings for Fluorescent Lamp

Mounting type (all dimensions in mm) – subject to alteration

Installation reference

D: pendant chain type

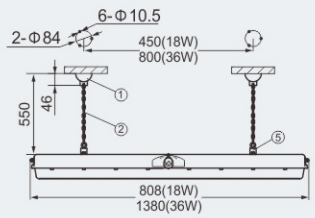

G: pendant pole type

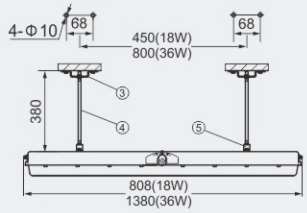

L: pole type (the pole is provided by user)

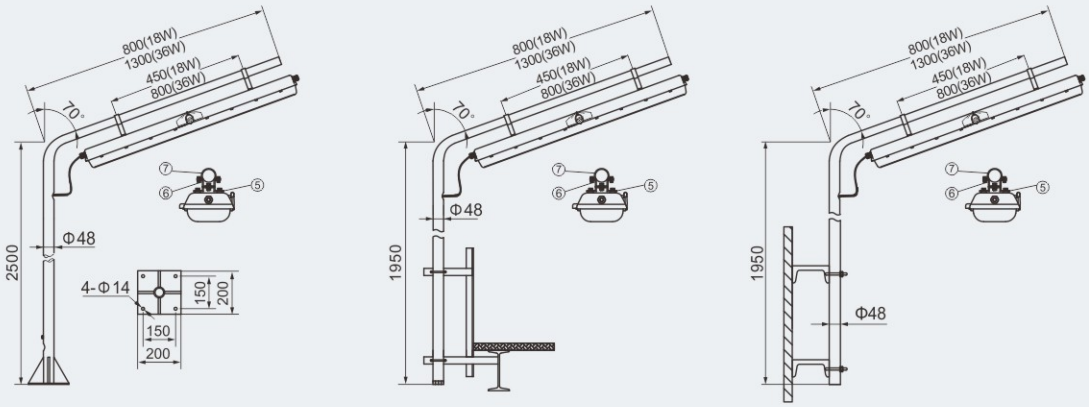

Suitable for ground pole type | Suitable for fence pole type | Suitable for wall pole type

X: ceiling type

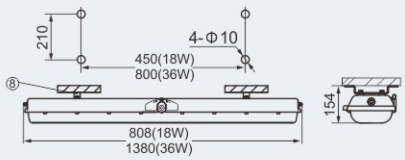

B: wall type

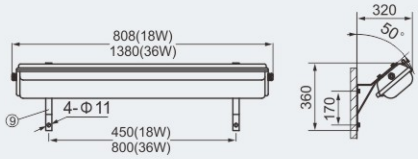

Mounting Accessories & Spare Parts Table

Supplied according to the mounting type

Mounting type	Accessories			Ordering code	Weight (kg)
	Name	Qty	Illustration		
D: pendant chain type	①.Sucker	2	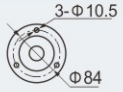	5136017	0.15
	②.Chain	2	Length: 450mm	5136016	0.08
	⑤.Mounting bracket	2	Stainless steel, same as pendant pole type	5136030	0.07
G: pendant pole type	③.Mounting bracket	2	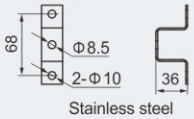	51S01G1	0.04
	④.M8 Screw	2	Stainless steel, length: 350mm	51S01G2	0.12
	⑤.Mounting bracket	2	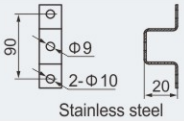	5136030	0.07

Note: Accessories not in the table shall be supplied by user.

Mounting Accessories & Spare Parts Table

Supplied according to the mounting type

Mounting type	Accessories			Ordering code	Weight (kg)
	Name	Qty	Illustration		
L: pole type	⑥.Mounting bracket	2	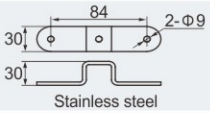	5136012	0.04
	⑦.G1 1/2" Pipe clamp	2	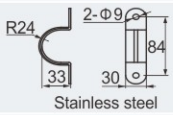	5136014	0.04
	⑤.Mounting bracket	2	Stainless steel, same as pendant pole type	5136030	0.07
X: ceiling type	⑧.Mounting bracket	2	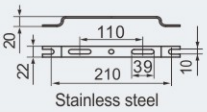	5136015	0.20
B: wall type	⑨.Wall bracket	2	Stainless steel, welded sheet steel	5136B02	0.62

Note: Accessories not in the table shall be supplied by user.

Schematic diagram (BAY51-Q□x□□J, T8 fluorescent lamp)

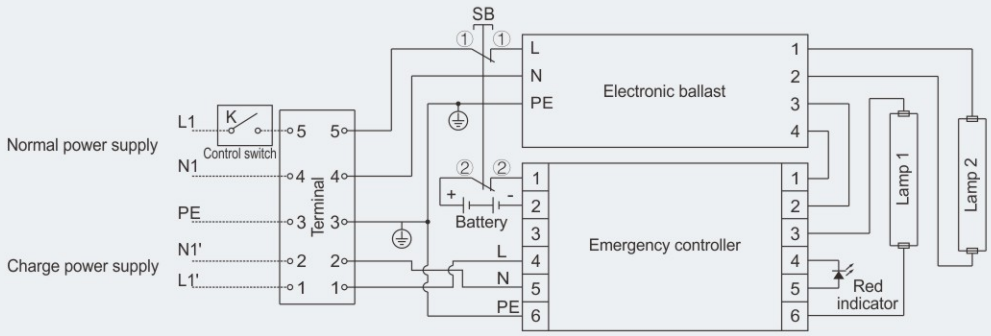

Note: Tube for lamp 2 shall be default for single tube fittings.

Accessories

Picture	Name	Ordering code	Weight (kg)
	Explosion-proof distance switch	5136003	0.04
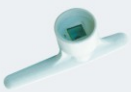	Spanner	5136004	0.02
	Lamp holder (with wires)	5136005	0.02
	YK36DF-2CS electronic ballast (T8/36W)	5136011	1.30
	YK18DF-2CS electronic ballast (T8/18W)	5118004	1.30
	BY-2 emergency controller (with battery) (T8/36W)	5136019	1.70
	BY-2 emergency controller (with battery) (T8/18W)	5118005	1.70

Light Fittings for Fluorescent Lamp
BAY51-Q LED Series Explosion-proof Light Fittings



- Explosion Protection to
  -CENELEC
  -IEC
  -NEC
- Can be used in
  Zone 1 and Zone 2
  Zone 21 and Zone 22
  Class I, Zone 1 and Zone 2
  Class I, Division 2, Groups A, B, C, D
- Enclosure size: Type I and Type II
- Available lamp and power
  LED tubes:
  Built-in power supply, LED lamp and driving power are integrated type: 9W×1, 18W×1, 9W×2, 18W×2;
  External power supply, LED lamp and driving power are split type: 14W x 1, 14W x 2, 28W x 1, 28W x 2.
  LED SMT：20W, 40W, 60W, 80W
- Enclosure: GRP (glass fiber reinforced polyester).
  Diffuser: PC (polycarbonate).
- Ex e enclosure with explosion-proof components inside.
- Interlock function between enclosure and diffuser, switches off on opening.
- Built-in LED driver, wide voltage input, CC-CV (constant current-constant voltage) output, power factor ≥0.95.
- Emergency unit with protections against overcharge and over-discharge.

Catalogue number logic

BAY51-Q LED □ x □ □ □

- □ (last): J: Emergency lighting (optional)
- □ (Mounting): L: pole type; X: ceiling type; B: wall type; D: pendant chain type; G: pendant pole type
- □ (Lamp number): Lamp number (No annotation are required for LED SMT)
- □ (Lamp power): Lamp power (W)
- LED
- BAY51-Q: Explosion-proof light fittings

Zones 1&2; 21&22

Technical data

Explosion-proof light fittings with LED lamp tube BAY51-Q LED □×□□□

Explosion protection	
Global (IECEx)	IECEx CQM 19.0013X
Gas and dust	Ex db eb IIC T6 Gb[1)] Ex db eb q IIC T5 or T6 Gb[1)] Ex tb IIIC T80℃ Db[1)]
Europe (ATEX)	CML19 ATEX 1288X
Gas and dust	Ⓔx II 2 G Ex db eb IIC T6 Gb[1)] Ⓔx II 2 G Ex db eb q IIC T5 or T6 Gb[1)] Ⓔx II 2 D Ex tb IIIC T80℃ Db[1)]
	[1)] See Selection Table
Certificates	IECEx; ATEX; CU-TR; INMETRO
Conformity to standards	EN 60079-0, EN 60079-1, EN 60079-5, EN 60079-7, EN 60079-31 IEC 60079-0, IEC 60079-1, IEC 60079-5, IEC 60079-7, IEC 60079-31
Material	
Enclosure	GRP, stands 7J impact, corrosion-proof
Diffuser	Polycarbonate, high light transmission, stands 7J impact
LED driver	Wide voltage input, CC-CV (constant current - constant voltage) output, power factor ≥0.95, with function of distributed current, constant current, surge-proof and anti-electromagnetic interference, and protection against overcurrent, open circuit, and short circuit. Certificate No.: CML 19 ATEX 5115U, CML 19 ATEX 5201U, IECEx CQM 19.0002U
Exposed fastener	Stainless steel
Lamp	
Lamp specification	LED lamp tube (supplied with the light fittings)
Lamp power (W)	9W×1, 18W×1, 9W×2, 18W×2 (LED lamp and driving power are integrated type) 14W x 1, 28W x 1, 14W x 2, 28W x 2 (LED lamp and driving power are split type) Certificate No.: CML 19 ATEX 1288X, IECEx CQM 19.0012U
Colour rendering index (Ra)	⩾80
Colour temperature (CCT)	5000K Note: nature white is available in general. Warm white or cool white is optional, please specify when ordering.
Rated voltage	Built-in power supply, LED lamp and driving power are integrated type: 170~264V AC 50/60Hz External power supply, LED lamp and driving power are split type: 100~277V AC 50/60Hz; 200~250V DC
Degree of protection	IP66
Ambient temperature	Ex db eb IIC T6 Gb for Tamb: -40℃~+55℃ Ex db eb q IIC T6 Gb for Tamb: -40℃~+45℃ Ex db eb q IIC T5 Gb for Tamb: -40℃~+55℃ Ex tb IIIC T80℃ Db for Tamb: -40℃~+55℃ Ⓔx II 2 G Ex db eb IIC T6 Gb for Tamb: -40℃~+55℃ Ⓔx II 2 G Ex db eb q IIC T6 Gb for Tamb: -40℃~+45℃ Ⓔx II 2 G Ex db eb q IIC T5 Gb for Tamb: -40℃~+55℃ Ⓔx II 2 D Ex tb IIIC T80℃ Db for Tamb: -40℃~+55℃
Terminal	3 x 1.5~4mm² (L+N+PE)
Cable entries	2 x Φ26: 2 x M25 x 1.5 cable glands (DQM-I Ex e, plastic).
Available cable outer diameter	Φ9~Φ16 (mm)
Emergency data	
Emergency controller	Special emergency controller and battery pack, with protection against overcharge and overdischarge.
Emergency power (W)	14W x 30%, 28W x 30%
Emergency starting time	0.3s
Charging time	24h
Emergency lighting time	120min (180min is optional)
Terminal	5 x 1.5~4mm² (L1+N1+L1'+N1'+PE)

Selection table

Lamp tube type	LED lamp and driving power are integrated type	LED lamp and driving power are split type
Explosion protection	Ⓔx II 2 G Ex db eb IIC T6 Gb Ⓔx II 2 D Ex tb IIIC T80℃ Db	Ⓔx II 2 G Ex db eb q IIC T5 or T6 Gb Ⓔx II 2 D Ex tb IIIC T80℃ Db
Lamp power (W)	9W×1, 18W×1, 9W×2, 18W×2	14W x 1, 28W x 1, 14W x 2, 28W x 2

Light Fittings for Fluorescent Lamp
BAY51-Q LED Series Explosion-proof Light Fittings

Technical data

Explosion-proof light fittings with LED SMT BAY51-Q LED □□□

Explosion protection	
Global (IECEx)	IECEx CQM 19.0013X
Gas and dust	Ex db eb mb IIC T6/T5 Gb[1)] Ex tb IIIC T80℃ Db[1)]
Europe (ATEX)	CML19 ATEX 1288X
Gas and dust	Ⓔx II 2 G Ex db eb mb IIC T6/T5 Gb[1)] Ⓔx II 2 D Ex tb IIIC T80℃ Db[1)]
	[1)] See Selection Table
Certificates	IECEx; ATEX; CU-TR; INMETRO
Conformity to standards	EN 60079-0, EN 60079-1, EN 60079-7, EN 60079-18, EN 60079-31, IEC 60079-0, IEC 60079-1, IEC 60079-7, IEC 60079-18, IEC 60079-31
Material	
Enclosure	GRP, stands 7J impact, corrosion-proof
Diffuser	Polycarbonate, high light transmission, stands 7J impact
LED driver	Wide voltage input, CC-CV (constant current - constant voltage) output, power factor ≥0.95, with function of distributed current, constant current, surge-proof and anti-electromagnetic interference, and protection against overcurrent, open circuit, and short circuit.
Exposed fastener	Stainless steel
Lamp	
Lamp specification	LED SMT (supplied with the light fittings)
Lamp power (W)	20W, 40W, 60W, 80W
Colour rendering index (Ra)	⩾80
Colour temperature (CCT)	5000K Note: nature white is available in general. Warm white or cool white is optional, please specify when ordering.
Rated voltage	100-277V AC 50/60Hz 130~250V DC
Degree of protection	IP66
Ambient temperature	-40℃~+60℃(+55℃)(+45℃)[1)] [1)] See Selection Table
Terminal	3 x 1.5~4mm^2 (L+N+PE)
Cable entries	2 x Φ26: 2 x M25 x 1.5 cable glands (DQM-I Ex e, plastic).
Available cable outer diameter	Φ9~Φ16 (mm)
Emergency data	
Emergency controller	Special emergency controller and battery pack, with protection against overcharge and overdischarge.
Emergency power (W)	20W x 70%, 40W x 35%, 60W x 23%, 80W x 18%
Emergency starting time	0.3s
Charging time	24h
Emergency lighting time	90min (180min is optional)
Terminal	5 x 1.5~4mm^2 (L1+N1+L1'+N1'+PE)

Selection table

Type / Ordering code	Temperature classification					
	-40℃⩽Ta⩽+45℃		-40℃⩽Ta⩽+55℃		-40℃⩽Ta⩽+60℃	
	Gas	Dust	Gas	Dust	Gas	Dust
BAY51-Q LED 20□, BAY51-Q LED 20□J BAY51-Q LED 40□, BAY51-Q LED 40□J	/	/	T6	T80℃	T5	T80℃
BAY51-Q LED 60□, BAY51-Q LED 60□J	T6	T80℃	T5	T80℃	/	/
BAY51-Q LED 80□, BAY51-Q LED 80□J	T5	T80℃	/	/	/	/

Selection table for explosion-proof light fittings with LED tubes, split type

Type / Ordering code	Lamp power(W)	Weight (kg)	Type / Ordering code	Lamp power(W)	Weight (kg)	Type / Ordering code	Lamp power(W)	Weight (kg)	Type / Ordering code	Lamp power(W)	Weight (kg)
BAY51-Q LED14 x 1L	14 x 1	8.00	BAY51-Q LED14 x 1LJ	14 x 1	8.30	BAY51-Q LED14 x 2L	14 x 2	8.45	BAY51-Q LED14 x 2LJ	14 x 2	8.80
BAY51-Q LED14 x 1X	14 x 1	7.90	BAY51-Q LED14 x 1XJ	14 x 1	8.20	BAY51-Q LED14 x 2X	14 x 2	8.35	BAY51-Q LED14 x 2XJ	14 x 2	8.70
BAY51-Q LED14 x 1B	14 x 1	8.90	BAY51-Q LED14 x 1BJ	14 x 1	9.20	BAY51-Q LED14 x 2B	14 x 2	9.35	BAY51-Q LED14 x 2BJ	14 x 2	9.70
BAY51-Q LED14 x 1D	14 x 1	9.20	BAY51-Q LED14 x 1DJ	14 x 1	9.50	BAY51-Q LED14 x 2D	14 x 2	9.65	BAY51-Q LED14 x 2DJ	14 x 2	10.00
BAY51-Q LED14 x 1G	14 x 1	8.85	BAY51-Q LED14 x 1GJ	14 x 1	9.15	BAY51-Q LED14 x 2G	14 x 2	9.30	BAY51-Q LED14 x 2GJ	14 x 2	9.65
BAY51-Q LED28 x 1L	28 x 1	12.50	BAY51-Q LED28 x 1LJ	28 x 1	13.65	BAY51-Q LED28 x 2L	28 x 2	12.90	BAY51-Q LED28 x 2LJ	28 x 2	14.15
BAY51-Q LED28 x 1X	28 x 1	13.20	BAY51-Q LED28 x 1XJ	28 x 1	14.45	BAY51-Q LED28 x 2X	28 x 2	13.70	BAY51-Q LED28 x 2XJ	28 x 2	14.95
BAY51-Q LED28 x 1B	28 x 1	13.30	BAY51-Q LED28 x 1BJ	28 x 1	14.55	BAY51-Q LED28 x 2B	28 x 2	13.80	BAY51-Q LED28 x 2BJ	28 x 2	15.05
BAY51-Q LED28 x 1D	28 x 1	13.55	BAY51-Q LED28 x 1DJ	28 x 1	14.80	BAY51-Q LED28 x 2D	28 x 2	14.00	BAY51-Q LED28 x 2DJ	28 x 2	15.30
BAY51-Q LED28 x 1G	28 x 1	13.20	BAY51-Q LED28 x 1GJ	28 x 1	14.45	BAY51-Q LED28 x 2G	28 x 2	13.70	BAY51-Q LED28 x 2GJ	28 x 2	14.95

Note: Products above include all the mounting accessories listed in Mounting Accessories & Spare Parts Table (see P2/14~15).

Selection table for explosion-proof light fittings with LED tubes, integrated type

Type / Ordering code	Lamp power(W)	Weight (kg)	Type / Ordering code	Lamp power(W)	Weight (kg)
BAY51-Q LED9 x 1L	9 x 1	7.50	BAY51-Q LED9 x 2L	9 x 2	8.50
BAY51-Q LED9 x 1X	9 x 1	7.40	BAY51-Q LED9 x 2X	9 x 2	8.00
BAY51-Q LED9 x 1B	9 x 1	8.40	BAY51-Q LED9 x 2B	9 x 2	9.00
BAY51-Q LED9 x 1D	9 x 1	8.60	BAY51-Q LED9 x 2D	9 x 2	9.00
BAY51-Q LED9 x 1G	9 x 1	8.40	BAY51-Q LED9 x 2G	9 x 2	9.00
BAY51-Q LED18 x 1L	18 x 1	12.00	BAY51-Q LED18 x 2L	18 x 2	12.40
BAY51-Q LED18 x 1X	18 x 1	12.70	BAY51-Q LED18 x 2X	18 x 2	13.30
BAY51-Q LED18 x 1B	18 x 1	12.80	BAY51-Q LED18 x 2B	18 x 2	13.30
BAY51-Q LED18 x 1D	18 x 1	13.00	BAY51-Q LED18 x 2D	18 x 2	13.60
BAY51-Q LED18 x 1G	18 x 1	12.70	BAY51-Q LED18 x 2G	18 x 2	13.20

Note: Products above include all the mounting accessories listed in Mounting Accessories & Spare Parts Table (see P2/14~15).

Selection table for explosion-proof light fittings with SMD LED

Type / Ordering code	Lamp power(W)	Weight (kg)	Type / Ordering code	Lamp power(W)	Weight (kg)	Type / Ordering code	Lamp power(W)	Weight (kg)	Type / Ordering code	Lamp power(W)	Weight (kg)
BAY51-Q LED20L	20	6.20	BAY51-Q LED40L	40	6.40	BAY51-Q LED60L	60	10.40	BAY51-Q LED80L	80	10.80
BAY51-Q LED20X	20	6.10	BAY51-Q LED40X	40	6.30	BAY51-Q LED60X	60	10.30	BAY51-Q LED80X	80	10.70
BAY51-Q LED20B	20	7.10	BAY51-Q LED40B	40	7.30	BAY51-Q LED60B	60	11.30	BAY51-Q LED80B	80	11.70
BAY51-Q LED20D	20	7.30	BAY51-Q LED40D	40	7.50	BAY51-Q LED60D	60	11.50	BAY51-Q LED80D	80	11.90
BAY51-Q LED20G	20	7.10	BAY51-Q LED40G	40	7.30	BAY51-Q LED60G	60	11.30	BAY51-Q LED80G	80	11.70
BAY51-Q LED20LJ	20	7.70	BAY51-Q LED40LJ	40	12.00	BAY51-Q LED60LJ	60	12.00	BAY51-Q LED80LJ	80	12.40
BAY51-Q LED20XJ	20	7.60	BAY51-Q LED40XJ	40	11.90	BAY51-Q LED60XJ	60	11.90	BAY51-Q LED80XJ	80	12.30
BAY51-Q LED20BJ	20	8.60	BAY51-Q LED40BJ	40	12.90	BAY51-Q LED60BJ	60	12.90	BAY51-Q LED80BJ	80	13.30
BAY51-Q LED20DJ	20	8.80	BAY51-Q LED40DJ	40	13.10	BAY51-Q LED60DJ	60	13.10	BAY51-Q LED80DJ	80	13.50
BAY51-Q LED20GJ	20	8.60	BAY51-Q LED40GJ	40	12.90	BAY51-Q LED60GJ	60	12.90	BAY51-Q LED80GJ	80	13.30

Note: Products above include all the mounting accessories listed in Mounting Accessories & Spare Parts Table (see P2/14~15).

Light Fittings for Fluorescent Lamp
BAY51-Q LED Series Explosion-proof Light Fittings

Photometric data Note: LED luminous flux is from the standard product of which colour temperature is 5000K

BAY51-Q LED 14x1 □□

Lamp power (W)	Luminous flux	Wattage
14 x 1	1515lm	15W

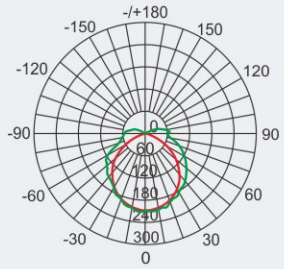

BAY51-Q LED 28x1 □□

Lamp power (W)	Luminous flux	Wattage
28 x 1	2855lm	28W

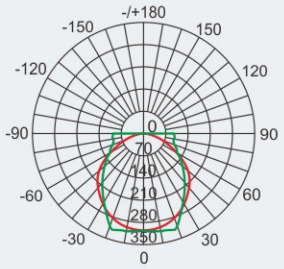

BAY51-Q LED 14x2 □□

Lamp power (W)	Luminous flux	Wattage
14 x 2	2905lm	29W

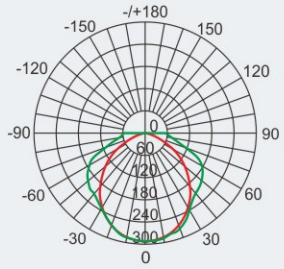

BAY51-Q LED 28x2 □□

Lamp power (W)	Luminous flux	Wattage
28 x 2	5770lm	56W

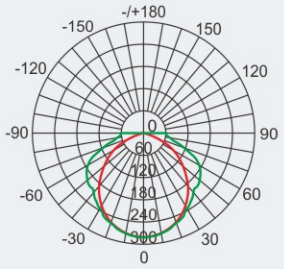

BAY51-Q LED 9x1 □

Lamp power (W)	Luminous flux	Wattage
9 x 1	910lm	9W

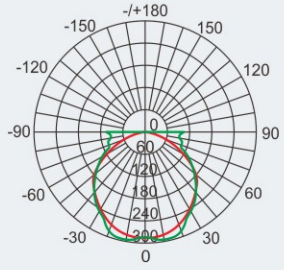

BAY51-Q LED 18x1 □

Lamp power (W)	Luminous flux	Wattage
18 x 1	1950lm	18.5W

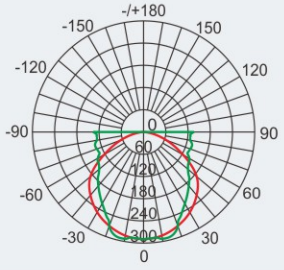

BAY51-Q LED 9x2 □

Lamp power (W)	Luminous flux	Wattage
9 x 2	1870lm	18.5W

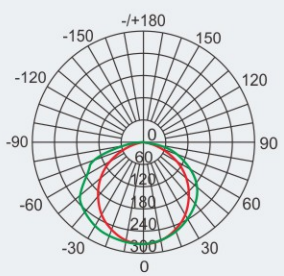

BAY51-Q LED 18x2 □

Lamp power (W)	Luminous flux	Wattage
18 x 2	3900lm	37W

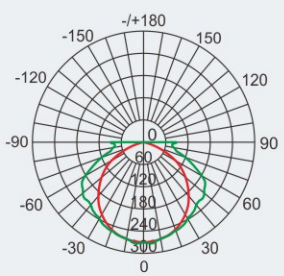

We can provide lighting design and data by professional lighting software DIALUX based upon simulated site situation on request.

Photometric data Note: LED luminous flux is from the standard product of which colour temperature is 5000K

BAY51-Q LED 20 □□

Lamp power (W)	Luminous flux	Wattage
20	2300lm	21W

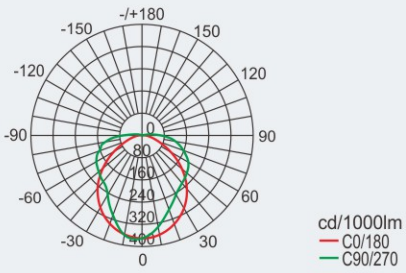

BAY51-Q LED 40 □□

Lamp power (W)	Luminous flux	Wattage
40	5100lm	44W

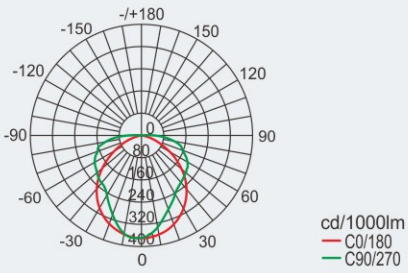

BAY51-Q LED 60 □□

Lamp power (W)	Luminous flux	Wattage
60	6900lm	57.3W

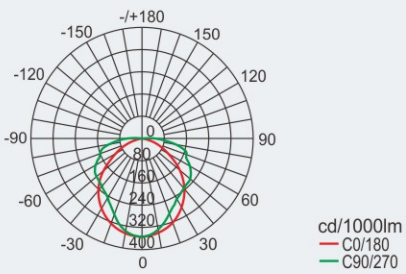

BAY51-Q LED 80 □□

Lamp power (W)	Luminous flux	Wattage
80	10300lm	87W

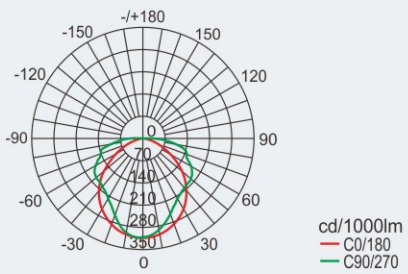

Dimension drawings (all dimensions in mm) - subject to alteration

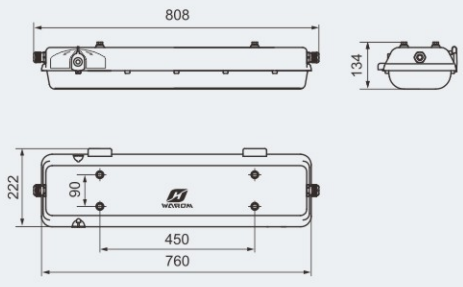

Type I

BAY51-Q LED 14 x □ □, BAY51-Q LED 14 x □ □J
BAY51-Q LED 9 x □ □
BAY51-Q LED 20 □, BAY51-Q LED 20 □J
BAY51-Q LED 40 □

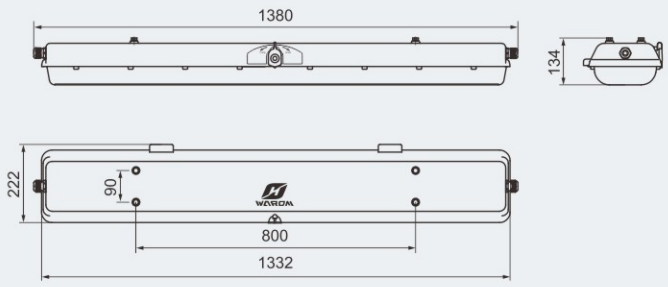

Type II

BAY51-Q LED 28 x □ □, BAY51-Q LED 28 x □ □J
BAY51-Q LED 18 x □ □, BAY51-Q LED 40 □J
BAY51-Q LED 60 □, BAY51-Q LED 60 □J
BAY51-Q LED 80 □, BAY51-Q LED 80 □J

Light Fittings for Fluorescent Lamp
BAY51-Q LED Series Explosion-proof Light Fittings

Mounting type (all dimensions in mm) – subject to alteration

Installation reference

D: pendant chain type

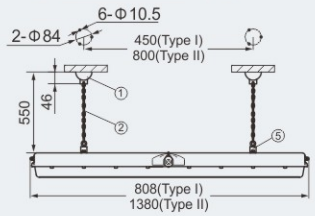

G: pendant pole type

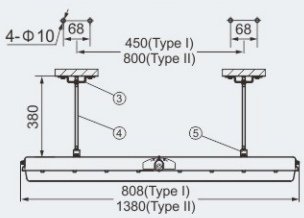

L: pole type (the pole is provided by user)

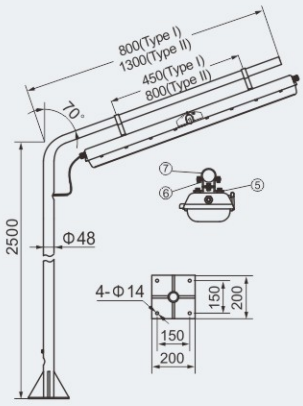

Suitable for ground pole type

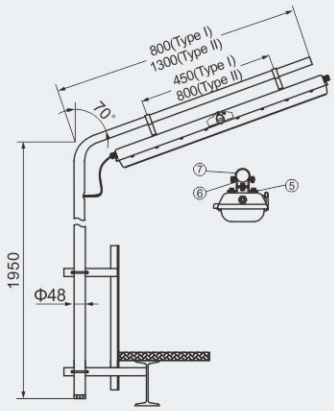

Suitable for fence pole type

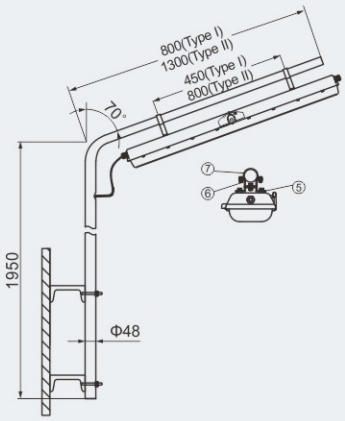

Suitable for wall pole type

X: ceiling type

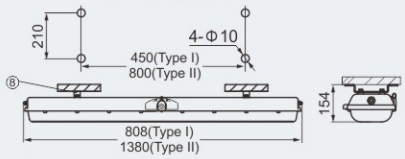

B: wall type

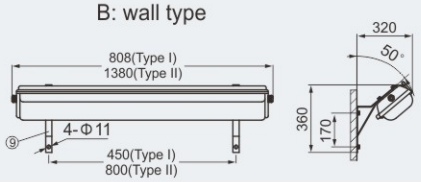

Mounting Accessories & Spare Parts Table

Supplied according to the mounting type

Mounting type	Accessories			Ordering code	Weight (kg)
	Name	Qty	Illustration		
D: pendant chain type	①.Sucker	2	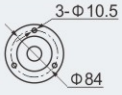	5136017	0.15
	②.Chain	2	Length: 450mm	5136016	0.08
	⑤.Mounting bracket	2	Stainless steel, same as pendant pole type	5136030	0.07
G: pendant pole type	③.Mounting bracket	2	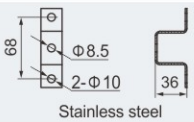 Stainless steel	51S01G1	0.04
	④.M8 Screw	2	Stainless steel, length: 350mm	51S01G2	0.12
	⑤.Mounting bracket	2	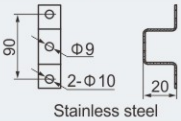 Stainless steel	5136030	0.07

Note: Accessories not in the table shall be supplied by user.

Mounting Accessories & Spare Parts Table

Supplied according to the mounting type

Mounting type	Accessories			Ordering code	Weight (kg)
	Name	Qty	Illustration		
L: pole type	⑥.Mounting bracket	2	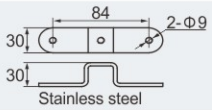	5136012	0.04
	⑦.G1 1/2" Pipe clamp	2	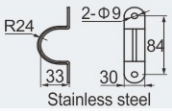	5136014	0.04
	⑤.Mounting bracket	2	Stainless steel, same as pendant pole type	5136030	0.07
X: ceiling type	⑧.Mounting bracket	2	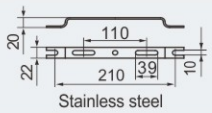	5136015	0.20
B: wall type	⑨.Wall bracket	2	Stainless steel, welded sheet steel	5136B02	0.62

Note: Accessories not in the table shall be supplied by user.

Schematic diagram (BAY51-Q LED□x□□J, LED tube)

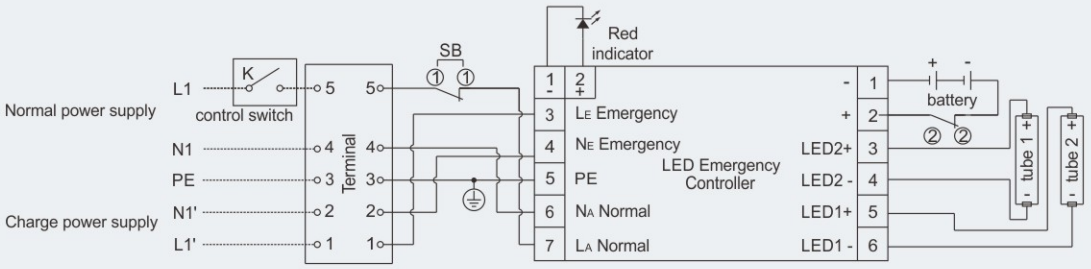

Note: Tube for lamp 2 shall be default for single tube fittings.

Accessories

Picture	Name	Ordering code	Weight (kg)
	Explosion-proof distance switch	5136008	0.04
	HRB14-2C Explosion-proof LED driver (LED/14W)	5114001	1.30
	HRB28-2C Explosion-proof LED driver (LED/28W)	5128001	1.30
	HRE14-2C Explosion-proof LED emergency controller (LED/14W)	5114002	1.75
	HRE28-2C Explosion-proof LED emergency controller (LED/28W)	5128002	2.30
	BT8-9 Explosion-proof LED lamp tube (LED/9W)	51E0901	0.25
	BT8-18 Explosion-proof LED lamp tube (LED/18W)	51E1801	0.52
	BT8-14 Explosion-proof LED lamp tube (LED/14W)	5114003	0.18
	BT8-28 Explosion-proof LED lamp tube (LED/28W)	5128003	0.34

Light Fittings for Fluorescent Lamp
BAY51 Series Explosion-proof Light Fittings for Fluorescent Lamp



- Explosion protection to
  -CENELEC
  -IEC
  -NEC
- Can be used in
  Zone 1 and Zone 2
  Zone 21 and Zone 22
  Class I, Zone 1 and Zone 2
  Class I, Division 1, Groups A, B, C, D
- Single or dual lamp versions
- Available lamp and power
  Fluorescent lamps: 18W x 1, 36W x 1, 58W x 1,
  18W x 2, 36W x 2, 58W x 2.
  LED lamps: 9W x 1, 9W x 2, 18W x 1, 18W x 2,
  28W x 1, 28W x 2.
- The glass tube stands 4J impact.
- Enclosure in Copper-free Aluminium Alloy, powder coated surface, yellow (RAL1021).
- Built-in electronic ballast, wide voltage input, rapid starting, stable performance, power factor ≥0.95.
- Built-in LED driver, wide voltage input, CC-CV (constant current - constant voltage) output, power factor≥0.95.
- End of lamp life (EOL) rectification effect protection.

Catalogue number logic

BAY51-□ □ x □ □ □

- J: Emergency lighting (optional)
- Mounting: L: pole type; X: ceiling type
- Lamp number
- Lamp power (W)
- LED: Only for LED lamp
- Explosion-proof light fittings for fluorescent lamp

Zones 1&2; 21&22

Technical data

Explosion-proof light fittings for fluorescent lamp BAY51-□ × □□

Explosion protection	
Global (IECEx)	IECEx CQM 12.0042X
Gas and dust	Ex d IIC T6 Gb Ex t IIIC T80℃ Db IP66
Europe (ATEX)	LCIE 09 ATEX 3046
Gas	Ⓔx II 2 G Ex d IIC T6 Gb Ⓔx II 2 D Ex tb IIIC T80℃ Db IP66
Certificates	IECEx; ATEX; CU-TR
Conformity to standards	EN 60079-0, EN 60079-1, EN 60079-31 IEC 60079-0, IEC 60079-1, IEC 60079-31
Material	
Enclosure	Copper-free Aluminium Alloy, powder coated surface, yellow (RAL1021)
Glass tube	Toughened glass, stands 4J impact
Ballast	Electronic ballast
Wire guard (optional)	Powder coated carbon steel (white) or stainless steel
External reflector	Powder coated pure aluminium
Exposed fastener	Stainless steel
Lamp	
Lamp specification	T8 tube (supplied with the light fittings)
Lamp power (W)	18W x 1 / 18W x 2 36W x 1 / 36W x 2 58W x 1 / 58W x 2
Rated voltage	100~300V AC 50/60Hz
Earthing protection	M5 (internal & external earth bolts)
Degree of protection	IP66
Ambient temperature	-20℃~+55℃
Terminal	3 x 1.5~4mm² (L+N+PE)
Cable entries	
Single lamp	2 x M25 x 1.5 plugs
Dual lamp	2 x M25 x 1.5 plugs
Cable gland (optional)	DQM-II (Ex d) or DQM-III (Ex d) is recommended. Please see P7/22~31

Selection table

Type / Ordering code	Lamp power(W)	Weight(kg)	Type / Ordering code	Lamp power(W)	Weight(kg)
BAY51-18 x 1X	18 x 1	5.60	BAY51-18 x 2X	18 x 2	10.60
BAY51-18 x 1L	18 x 1	6.50	BAY51-18 x 2L	18 x 2	11.55
BAY51-36 x 1X	36 x 1	8.80	BAY51-36 x 2X	36 x 2	16.30
BAY51-36 x 1L	36 x 1	9.30	BAY51-36 x 2L	36 x 2	16.85
BAY51-58 x 1X	58 x 1	10.40	BAY51-58 x 2X	58 x 2	18.30
BAY51-58 x 1L	58 x 1	10.85	BAY51-58 x 2L	58 x 2	19.20

Note: Products above include all the mounting accessories listed in Mounting Accessories & Spare Parts Table (see P2/23~24).

Dimension drawings (all dimensions in mm) - subject to alteration

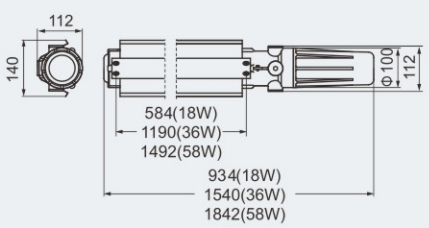

BAY51-□x1□

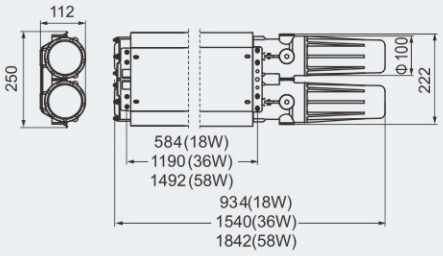

BAY51-□x2□

Light Fittings for Fluorescent Lamp
BAY51 Series Explosion-proof Light Fittings for Fluorescent Lamp

Technical data

Explosion-proof emergency light fittings for fluorescent lamp BAY51-□ × □□J

Explosion protection	
Global (IECEx)	IECEx CQM 13.0004X
Gas and dust	Ex d IIC T6 Gb
	Ex tb IIIC T80℃ Db IP66
Europe (ATEX)	LCIE 13 ATEX 3003X
Gas and dust	Ⓔx II 2 G Ex d IIC T6 Gb
	Ⓔx II 2 D Ex tb IIIC T80℃ Db IP66
Certificates	IECEx; ATEX; CU-TR
Conformity to standards	EN 60079-0, EN 60079-1, EN 60079-31
	IEC 60079-0, IEC 60079-1, IEC 60079-31
Material	
Enclosure	Copper-free Aluminium Alloy, powder coated surface, yellow (RAL1021)
Glass tube	Toughened glass, stands 4J impact
Emergency unit	Special emergency controller and battery pack, with protection against over-charge and overdischarge
Ballast	Electronic ballast
Wire guard (optional)	Powder coated carbon steel (white) or stainless steel
External reflector	Powder coated pure aluminium
Exposed fastener	Stainless steel
Lamp	
Lamp specification	T8 tube (supplied with the light fittings)
Lamp power (W)	18W x 2, 36W x 2, 58W x 2
Emergency power (W)	18W x 30%, 36W x 30%, 58W x 30%
Emergency starting time	0.3s
Charging time	24h
Emergency lighting time	120min (180min is optional)
Rated voltage	100~300V AC 50/60Hz
Earthing protection	M5 (internal & external earth bolts)
Degree of protection	IP66
Ambient temperature	-20℃~+55℃
Terminal	3 x 1.5~4mm^2 (L+N+PE)
Cable entries	4 x M25 x 1.5 plugs
Cable gland (optional)	DQM-II (Ex d) or DQM-III (Ex d) is recommended. Please see P7/22~31

Selection table

Type / Ordering code	Lamp power(W)	Weight(kg)	Type / Ordering code	Lamp power(W)	Weight(kg)
BAY51-18 x 2XJ	18 x 2	14.50	BAY51-36 x 2LJ	36 x 2	20.30
BAY51-18 x 2LJ	18 x 2	14.60	BAY51-58 x 2XJ	58 x 2	22.20
BAY51-36 x 2XJ	36 x 2	20.20	BAY51-58 x 2LJ	58 x 2	22.30

Note: Products above include all the mounting accessories listed in Mounting Accessories & Spare Parts Table (see P2/25).

Dimension drawings (all dimensions in mm) - subject to alteration

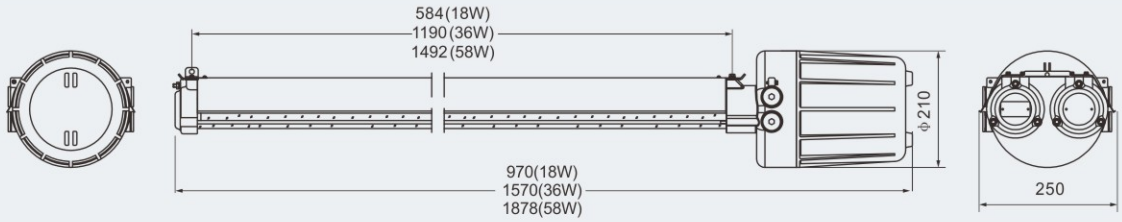

BAY51-□x2□J

Photometric data

BAY51-18x1□□

Lamp power (W)	Rated luminous flux (Lamp tube)	Luminaire efficiency
18 x 1	1300lm	70%

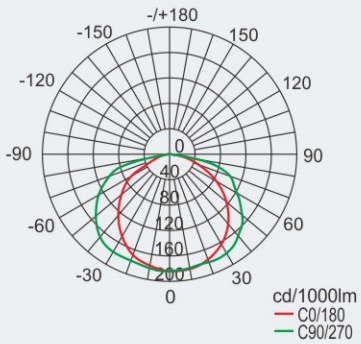

BAY51-18x2□□

Lamp power (W)	Rated luminous flux (Lamp tube)	Luminaire efficiency
18 x 2	2600lm	67%

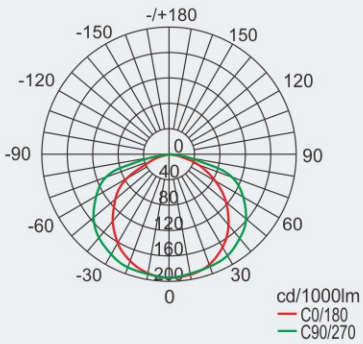

BAY51-36x1□□

Lamp power (W)	Rated luminous flux (Lamp tube)	Luminaire efficiency
36 x 1	3250lm	67%

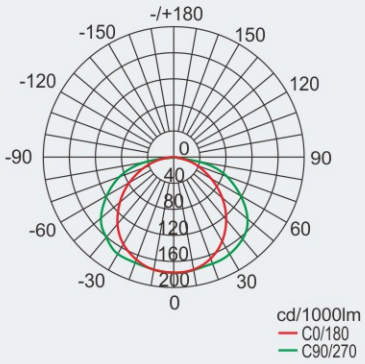

BAY51-36x2□□

Lamp power (W)	Rated luminous flux (Lamp tube)	Luminaire efficiency
36 x 2	6500lm	66%

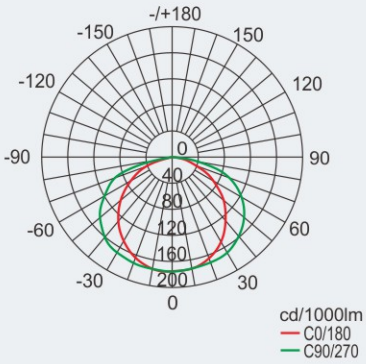

BAY51-58x1□□

Lamp power (W)	Rated luminous flux (Lamp tube)	Luminaire efficiency
58 x 1	5000lm	66%

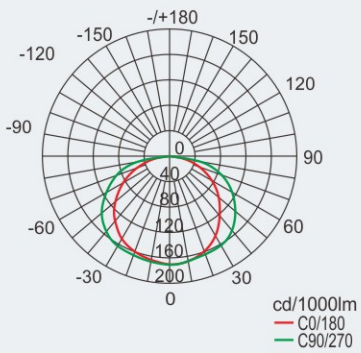

BAY51-58x2□□

Lamp power (W)	Rated luminous flux (Lamp tube)	Luminaire efficiency
58 x 2	10000lm	65%

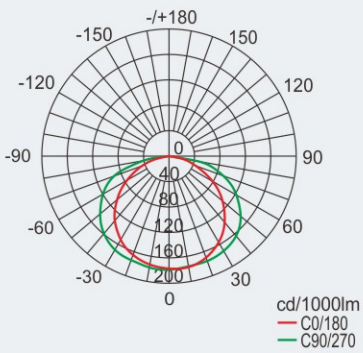

We can provide lighting design and data by professional lighting software DIALUX based upon simulated site situation on request.

Technical data

Explosion-proof light fittings with LED tubes BAY51-LED□ × □□

Explosion protection		
Global (IECEx)	IECEx CQM 12.0005X	
Gas and dust	Ex d IIC T6 Gb Ex tb IIIC T80℃ Db IP66	
Europe (ATEX)	EPT 15 ATEX 2287X	LCIE 11 ATEX 3112X
Gas and dust	Ⓔx II 2 G Ex db IIC T6 Gb Ⓔx II 2 D Ex tb IIIC T80℃ Db IP66	Ⓔx II 2 G Ex d IIC T6 Gb Ⓔx II 2 D Ex t IIIC T80℃ Db IP66
Certificates	IECEx; ATEX; CU-TR	
Conformity to standards	EN 60079-0, EN 60079-1, EN 60079-31 IEC 60079-0, IEC 60079-1, IEC 60079-31	
Material		
Enclosure	Copper-free Aluminium Alloy, powder coated surface, yellow (RAL1021)	
Glass tube	Toughened glass, stands 4J impact	
LED driver	Wide voltage input, CC-CV (constant current - constant voltage) output, power factor ≥0.95, with function of distributed current, constant current, surge-proof and anti-electromagnetic interference, and protection against overcurrent, open circuit, and short circuit.	
Wire guard (optional)	Powder coated carbon steel (white) or stainless steel	
External reflector	Powder coated pure aluminium	
Exposed fastener	Stainless steel	
Lamp		
Lamp specification	LED module (supplied with the light fittings)	
Lamp power (W)	9W x 1, 9W x 2, 18W x 1, 18W x 2, 28W x 1, 28W x 2	
Colour rendering index (Ra)	⩾80	
Colour temperature (CCT)	5000K Note: nature white is available in general. Warm white or cool white is optional, please specify when ordering.	
Rated voltage	110~265V AC 50/60Hz	
Earthing protection	M5 (internal & external earth bolts)	
Degree of protection	IP66	

Ambient temperature

Certificates	Lamp power (W)	Ambient temperature
EPT 15 ATEX 2287X	9W x 1, 9W x 2, 18W x 1 18W x 2, 28W x 1, 28W x 2	-20℃~+55℃
LCIE 11 ATEX 3112X	9W x 1, 9W x 2 18W x 1, 18W x 2	-40℃~+55℃
IECEx CQM 12.0005X	9W x 1, 9W x 2, 18W x 1, 18W x 2	-40℃~+55℃
	28W x 1, 28W x 2	-20℃~+55℃

Terminal	3 x 1.5~4mm^2 (L+N+PE)
Mounting	Ceiling type, pole type
Cable entries	
Single lamp	2 x M25 x 1.5 plugs
Dual lamp	2 x M25 x 1.5 plugs
Cable gland	DQM-II (Ex d) or DQM-III (Ex d) is recommended. Please see P7/22~31

Selection table

Type / Ordering code	Lamp power(W)	Weight(kg)	Type / Ordering code	Lamp power(W)	Weight(kg)
BAY51-LED 9 x 1X	9 x 1	5.50	BAY51-LED 9 x 2X	9 x 2	9.80
BAY51-LED 9 x 1L	9 x 1	5.90	BAY51-LED 9 x 2L	9 x 2	10.50
BAY51-LED 18 x 1X	18 x 1	8.30	BAY51-LED 18 x 2X	18 x 2	15.70
BAY51-LED 18 x 1L	18 x 1	8.35	BAY51-LED 18 x 2L	18 x 2	16.40
BAY51-LED 28 x 1X	28 x 1	10.00	BAY51-LED 28 x 2X	28 x 2	17.30
BAY51-LED 28 x 1L	28 x 1	10.30	BAY51-LED 28 x 2L	28 x 2	18.30

Note: Products above include all the mounting accessories listed in Mounting Accessories & Spare Parts Table (see P2/23~24).

Dimension drawings (all dimensions in mm) - subject to alteration

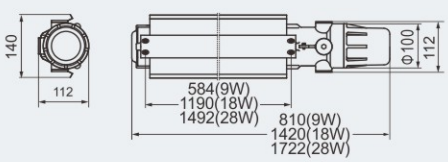

BAY51-LED□x1□

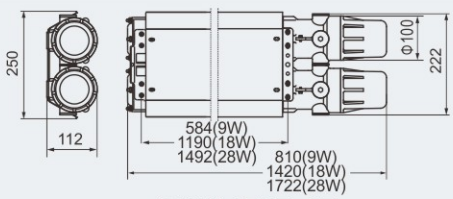

BAY51-LED□x2□

Technical data

Explosion-proof light fittings with LED tubes BAY51-LED□ × □□J

Explosion protection	
Global (IECEx)	IECEx CQM 14.0051X
Gas and dust	Ex d IIC T6 Gb Ex tb IIIC T80℃ Db IP66
Europe (ATEX)	EUT 14 ATEX 1885
Gas and dust	Ⓔx II 2 G Ex d IIC T6 Gb Ⓔx II 2 D Ex tb IIIC T80℃ Db IP66
Certificates	IECEx; ATEX; CU-TR
Conformity to standards	EN 60079-0, EN 60079-1, EN 60079-31 IEC 60079-0, IEC 60079-1, IEC 60079-31
Material	
Enclosure	Copper-free Aluminium Alloy, powder coated surface, yellow (RAL1021)
Glass tube	Toughened glass, stands 4J impact
LED driver	Wide voltage input, CC-CV (constant current - constant voltage) output, with function of distributed current, constant current, surge-proof and anti-electromagnetic interference, and protection against overcurrent, open circuit, and short circuit.
Emergency unit	Special emergency controller and battery pack, with protection against over-charge and overdischarge
Wire guard (optional)	Powder coated carbon steel (white) or stainless steel
External reflector	Powder coated pure aluminium
Exposed fastener	Stainless steel
Lamp	
Lamp specification	LED module (supplied with the light fittings)
Lamp power (W)	9W x 2, 18W x 2, 28W x 2
Colour rendering index (Ra)	⩾80
Colour temperature (CCT)	5000K Note: nature white is available in general. Warm white or cool white is optional, please specify when ordering.
Emergency power (W)	9W x 30%, 18W x 30%, 28W x 30%
Emergency starting time	0.3s
Charging time	24h
Emergency lighting time	120min (180min is optional)
Rated voltage	110~265V AC 50/60Hz
Earthing protection	M5 (internal & external earth bolts)
Degree of protection	IP66
Ambient temperature	-20℃~+55℃
Terminal	3 x 1.5~4mm^2 (L+N+PE)
Cable entries	4 x M25 x 1.5 plugs
Cable gland(optional)	DQM-II (Ex d) or DQM-III (Ex d) is recommended. Please see P7/22~31

Selection table

Type / Ordering code	Lamp power(W)	Weight (kg)	Type / Ordering code	Lamp power(W)	Weight (kg)	Type / Ordering code	Lamp power(W)	Weight (kg)
BAY51-LED 9 x 2XJ	9 x 2	13.70	BAY51-LED 18 x 2XJ	18 x 2	19.40	BAY51-LED 28 x 2XJ	28 x 2	21.40
BAY51-LED 9 x 2LJ	9 x 2	13.80	BAY51-LED 18 x 2LJ	18 x 2	19.50	BAY51-LED 28 x 2LJ	28 x 2	21.50

Note: Products above include all the mounting accessories listed in Mounting Accessories & Spare Parts Table (see P2/25).

Dimension drawings (all dimensions in mm) - subject to alteration

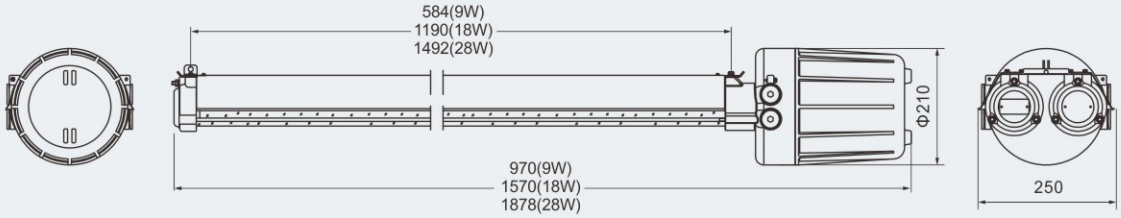

BAY51- LED□x2□J

Photometric data

Note: LED luminous flux is from the standard product of which colour temperature is 5000K

BAY51-LED 9x1□

Lamp power (W)	Luminous flux	Wattage
9 x 1	1000lm	9.5W

Rated luminous flux (Lamp tube) 9Wx1: 1080lm

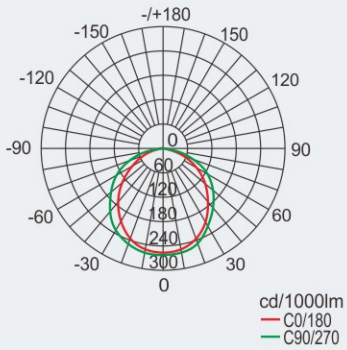

BAY51-LED 9x2□□

Lamp power (W)	Luminous flux	Wattage
9 x 2	1980lm	19W

Rated luminous flux (Lamp tube) 9Wx2: 2160lm

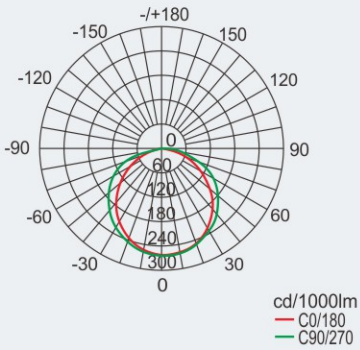

BAY51-LED 18x1□

Lamp power (W)	Luminous flux	Wattage
18 x 1	1960lm	18.5W

Rated luminous flux (Lamp tube) 18Wx1: 2160lm

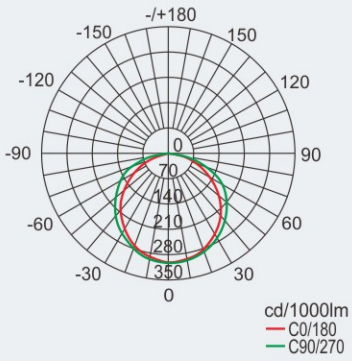

BAY51-LED 18x2□□

Lamp power (W)	Luminous flux	Wattage
18 x 2	3920lm	37W

Rated luminous flux (Lamp tube) 18Wx2: 4320lm

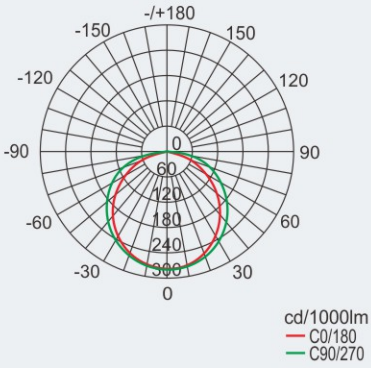

BAY51-LED 28x1□

Lamp power (W)	Luminous flux	Wattage
28 x 1	2985lm	29W

Rated luminous flux (Lamp tube) 28Wx1: 3360lm

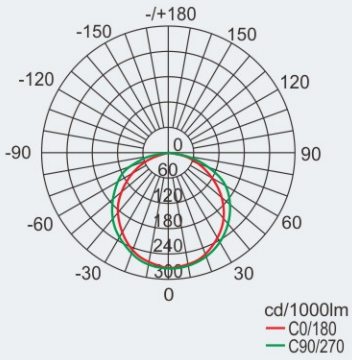

BAY51-LED 28x2□□

Lamp power (W)	Luminous flux	Wattage
28 x 2	5606lm	56W

Rated luminous flux (Lamp tube) 28Wx2: 6720lm

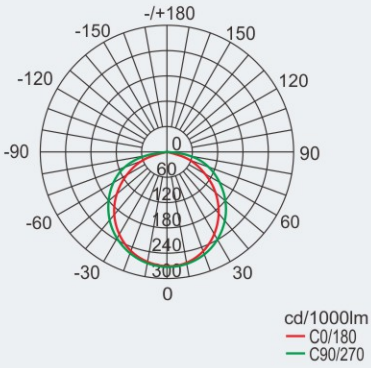

We can provide lighting design and data by professional lighting software DIALUX based upon simulated site situation on request.

Mounting type for light fittings with single lamp tube (all dimensions in mm) - subject to alteration

Installation reference

X: ceiling type

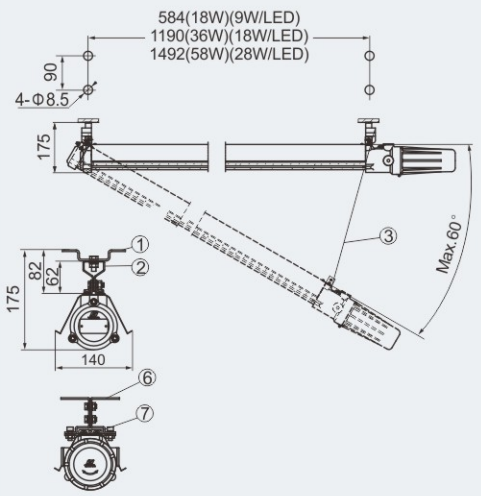

L: pole type (the pole is provided by user)

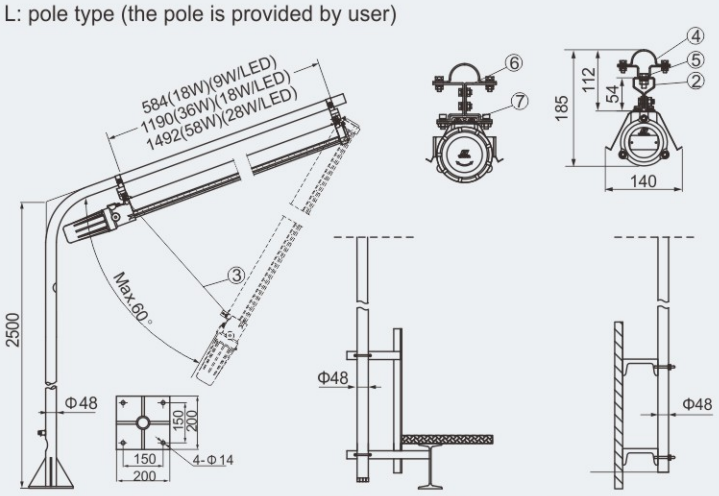

Suitable for ground pole type | Suitable for fence pole type | Suitable for wall pole type

Mounting Accessories & Spare Parts Table (light fittings with single lamp tube)

Supplied according to the mounting type

Mounting type	Accessories			Ordering code	Weight (kg)
	Name	Qty	Illustration		
X: ceiling type	①.Mounting bracket	1	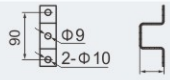 Stainless steel	5136030	0.07
	②.Connector	1	 Stainless steel	51S01X1	0.04
	③.Steel wire rope (with hook)	1	Stainless steel, length: 0.7m (18W, 9WLED), 1.3m (36W, 18WLED), 1.6m (58W, 28WLED)	51S01X2	0.30~0.50
	⑥.Mounting bracket	2	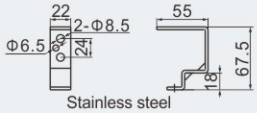 Stainless steel	5136041	0.08
	⑦.Mounting bracket	1	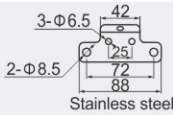 Stainless steel	5136042	0.08
L: pole type	④.G1 1/2" Pipe clamp	2	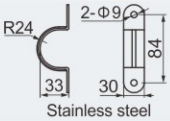 Stainless steel	5136014	0.04
	⑤.Mounting bracket	2	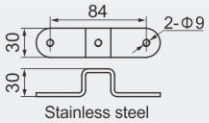 Stainless steel	5136012	0.04
	②.Connector	2	Stainless steel, same as ceiling type	51S01X1	0.04
	③.Steel wire rope (with hook)	1	Stainless steel, same as ceiling type	51S01X2	0.30~0.50
	⑥.Mounting bracket	2	Stainless steel, same as ceiling type	5136041	0.08
	⑦.Mounting bracket	1	Stainless steel, same as ceiling type	5136042	0.08

Note: Accessories not in the table shall be supplied by user.

Light Fittings for Fluorescent Lamp
BAY51 Series Explosion-proof Light Fittings for Fluorescent Lamp

Mounting type for light fittings with dual lamp tube (all dimensions in mm) - subject to alteration

Installation reference

X: ceiling type

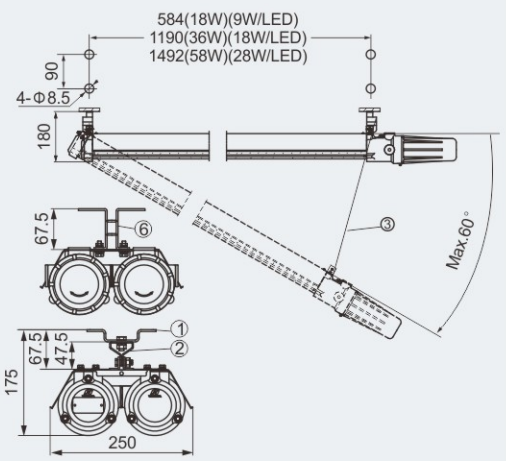

L: pole type (the pole is provided by user)

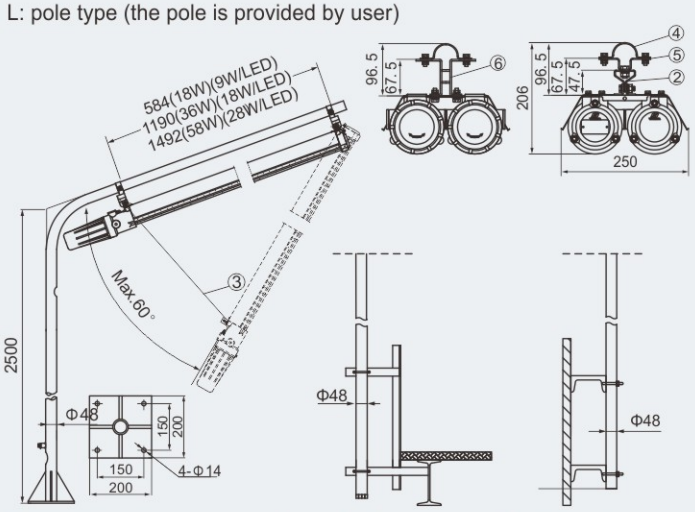

Suitable for ground pole type | Suitable for fence pole type | Suitable for wall pole type

Mounting Accessories & Spare Parts Table (light fittings with dual lamp tube)

Supplied according to the mounting type

Mounting type	Accessories			Ordering code	Weight (kg)
	Name	Qty	Illustration		
X: ceiling type	①.Mounting bracket	1	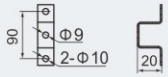 Stainless steel	5136030	0.07
	②.Connector	1	 Stainless steel	51S01X1	0.04
	③.Steel wire rope (with hook)	1	Stainless steel, length: 0.7m (18W, 9WLED), 1.3m (36W, 18WLED), 1.6m (58W, 28WLED)	51S01X2	0.30~0.50
	⑥.Mounting bracket	1	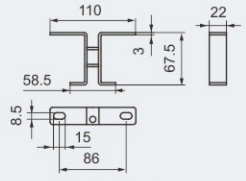 Stainless steel	51D01X3	0.13
L: pole type	④.G1 1/2" Pipe clamp	2	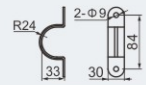 Stainless steel	5136014	0.04
	⑤.Mounting bracket	1	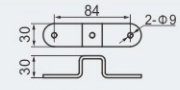 Stainless steel	5136012	0.04
	②.Connector	2	Stainless steel, same as ceiling type	51S01X1	0.04
	③.Steel wire rope (with hook)	1	Stainless steel, same as ceiling type	51S01X2	0.30~0.50
	⑥.Mounting bracket	1	Stainless steel, same as ceiling type	51D01X3	0.13

Note: Accessories not in the table shall be supplied by user.

Mounting type for light fittings with dual lamp tube (all dimensions in mm) - subject to alteration

Installation reference

X: ceiling type

(for: BAY51-□ × 2XJ; BAY51-LED□ × 2XJ)

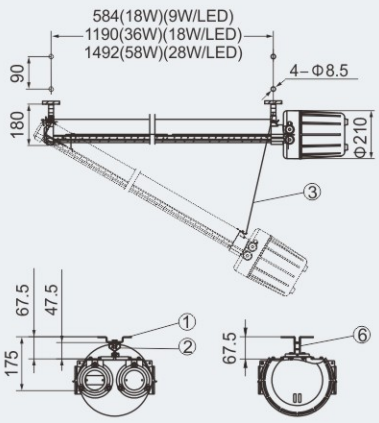

L: pole type (the pole is provided by user)

(for: BAY51-□ × 2LJ; BAY51-LED□ × 2LJ)

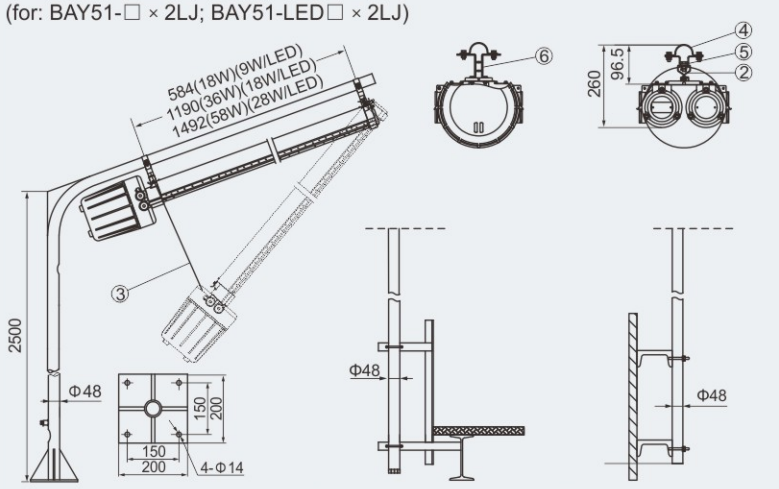

Suitable for ground pole type | Suitable for fence pole type | Suitable for wall pole type

Mounting Accessories & Spare Parts Table (light fittings with dual lamp tube)

Supplied according to the mounting type

Mounting type	Accessories			Ordering code	Weight (kg)
	Name	Qty	Illustration		
X: ceiling type	①.Mounting bracket	1	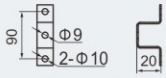 Stainless steel	5136030	0.07
	②.Connector	1	 Stainless steel	51S01X1	0.04
	③.Steel wire rope (with hook)	1	Stainless steel, length: 0.7m (18W, 9WLED), 1.3m (36W, 18WLED), 1.6m (58W, 28WLED)	51S01X2	0.30~0.50
	⑥.Mounting bracket	1	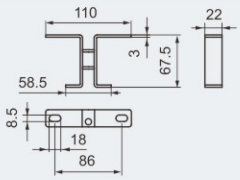 Stainless steel	51D01X3	0.13
L: pole type	④.G1 1/2" Pipe clamp	2	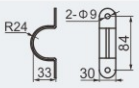 Stainless steel	5136014	0.04
	⑤.Mounting bracket	1	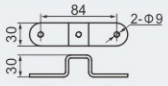 Stainless steel	5136012	0.04
	②.Connector	2	Stainless steel, same as ceiling type	51S01X1	0.04
	③.Steel wire rope (with hook)	1	Stainless steel, same as ceiling type	51S01X2	0.30~0.50
	⑥.Mounting bracket	1	Stainless steel, same as ceiling type	51D01X3	0.13

Note: Accessories not in the table shall be supplied by user.

Light Fittings for Fluorescent Lamp
BAY51-D Series Explosion-proof Light Fittings



- Explosion Protection to
  -CENELEC
  -IEC
  -NEC
- Can be used in
  Zone 1 and Zone 2
  Zone 21 and Zone 22
  Class I, Zone 1 and Zone 2
  Class I, Division 1, Groups B, C, D
- Three enclosure types: Type I, Type II and Type III
  Available lamp and power
  Type I: T8 18W x 2, LED 9W x 2
  Type II: T8 36W x 2, LED 18W x 2
  Type III: T8 58W x 2, LED 28W x 2
- The glass tube stands 4J impact.
- Enclosure in Copper-free Aluminium Alloy, powder coated surface, yellow (RAL1021).
- Built-in electronic ballast, wide voltage input, rapid starting, stable performance, power factor ≥0.95.
- Built-in LED driver, wide voltage input, CC-CV (constant current - constant voltage) output, power factor≥0.95.
- End of lamp life (EOL) rectification effect protection.
- Emergency functions are available on request.

Catalogue number logic

BAY51-D-□ □ x □ □ □

- J: Emergency lighting (optional)
- Mounting
  - G1: pendant pole type 1
  - G2: pendant pole type 2
  - L: pole type
  - X: ceiling type
- Lamp number
- Lamp power (W)
- LED: Only for LED lamp
- Explosion-proof light fittings

Dimension drawings (all dimensions in mm) - subject to alteration

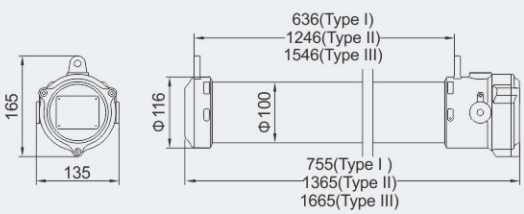

BAY51-D-□□x2□
Without external reflector

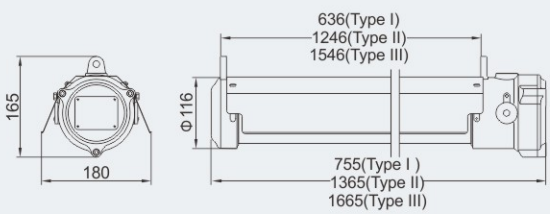

BAY51-D-□□x2□
With external reflector

Zones 1&2; 21&22

Technical data

Explosion-proof light fittings BAY51-D-□×□□□

Explosion protection	
Global (IECEx)	IECEx CQM 16.0023X
Gas and dust	Ex db IIB T6 Gb Ex db IIB+H_2 T6 Gb Ex tb IIIC T80℃ Db IP66
Europe (ATEX)	TÜV CY 21 ATEX 0206465X
Gas and dust	Ⓔx II 2 G Ex db IIB T6 Gb Ⓔx II 2 G Ex db IIB+H_2 T6 Gb Ⓔx II 2 D Ex tb IIIC T80℃ Db
Certificates	IECEx; ATEX; CU-TR
Conformity to standards	EN 60079-0, EN 60079-1, EN 60079-31, IEC 60079-0, IEC 60079-1, IEC 60079-31
Material	
Enclosure	Copper-free Aluminium Alloy, powder coated surface, yellow (RAL1021)
Glass tube	Toughened glass, stands 4J impact
Ballast	Electronic ballast
Emergency unit	Special emergency controller and battery pack, with protection against over-charge and overdischarge
Wire guard (optional)	Powder coated carbon steel (white) or stainless steel
External reflector (optional)	Powder coated pure aluminium
Exposed fastener	Stainless steel
Lamp	
Lamp specification	T8 fluorescent lamp (supplied with the light fittings)
Lamp power (W)	18Wx2, 36Wx2, 58Wx2
Rated voltage	100-305V AC 50/60Hz
Earthing protection	M5 (internal & external earth bolts)
Degree of protection	IP66
Ambient temperature	Ex db IIB+H_2 T6 Gb for Tamb: -20℃~+55℃ Ex db IIB T6 Gb for Tamb: -60℃~+55℃ Ex tb IIIC T80℃ Db IP66 for Tamb: -60℃~+55℃ Ⓔx II 2 G Ex db IIB+H_2 T6 Gb for Tamb: -20℃~+55℃ Ⓔx II 2 G Ex db IIB T6 Gb for Tamb: -60℃~+55℃ Ⓔx II 2 D Ex tb IIIC T80℃ Db for Tamb: -60℃~+55℃
Terminal	3 x 1.5~4mm^2 (L+N+PE)
Cable entries	2 x M25 x 1.5 plugs (M20 x 1.5 plugs is optional)
Cable gland(optional)	DQM-II (Ex d) or DQM-III (Ex d) is recommended. Please see P7/22~31
Emergency data	
Emergency unit	Special emergency controller and battery pile, with protection against overcharge and overdischarge
Emergency power (W)	36W x 30%, 58W x 30%
Emergency starting time	0.3s
Charging time	24h
Emergency lighting time	120min (180min is optional)

Selection table

Type / Ordering code	Lamp power(W)	Weight (kg)	Type / Ordering code	Lamp power(W)	Weight (kg)	Type / Ordering code	Lamp power(W)	Weight (kg)
BAY51-D-18 x 2G1	18×2	5.85	BAY51-D-36 x 2G1	36×2	8.45	BAY51-D-58 x 2G1	58×2	9.72
BAY51-D-18 x 2G2	18×2	7.00	BAY51-D-36 x 2G2	36×2	9.63	BAY51-D-58 x 2G2	58×2	10.90
BAY51-D-18 x 2X	18×2	5.52	BAY51-D-36 x 2X	36×2	8.13	BAY51-D-58 x 2X	58×2	9.40
BAY51-D-18 x 2L	18×2	5.64	BAY51-D-36 x 2L	36×2	8.25	BAY51-D-58 x 2L	58×2	9.52
			BAY51-D-36 x 2G1J	36×2	12.35	BAY51-D-58 x 2G1J	58×2	13.60
			BAY51-D-36 x 2G2J	36×2	13.35	BAY51-D-58 x 2G2J	58×2	14.85
			BAY51-D-36 x 2XJ	36×2	12.05	BAY51-D-58 x 2XJ	58×2	13.30
			BAY51-D-36 x 2LJ	36×2	12.15	BAY51-D-58 x 2LJ	58×2	13.40

Note: 1. Products above include all the mounting accessories listed in Mounting Accessories & Spare Parts Table (see P2/31).
2. The light fittings are supplied without wire guard and external reflector. Please specify when ordering.

Light Fittings for Fluorescent Lamp
BAY51-D Series Explosion-proof Light Fittings

Photometric data

BAY51-D-18x2□、BAY51-D-14x2□

Lamp power (W)	Rated luminous flux (Lamp tube)	Luminaire efficiency
T8 18 x 2	2600lm	65%

(with external reflector)

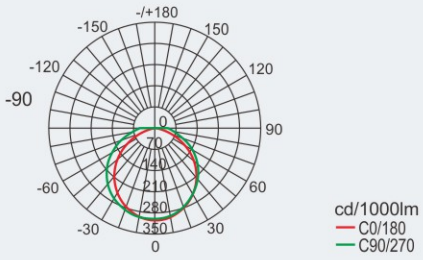

BAY51-D-18x2□、BAY51-D-14x2□

Lamp power (W)	Rated luminous flux (Lamp tube)	Luminaire efficiency
T8 18 x 2	2600lm	65%

(without external reflector)

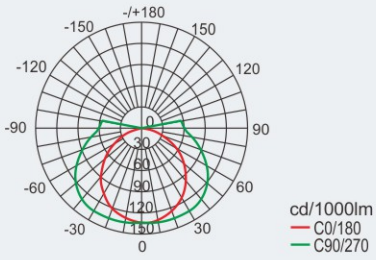

BAY51-D-36x2□□、BAY51-D-28x2□

Lamp power (W)	Rated luminous flux (Lamp tube)	Luminaire efficiency
T8 36 x 2	6500lm	65%

(with external reflector)

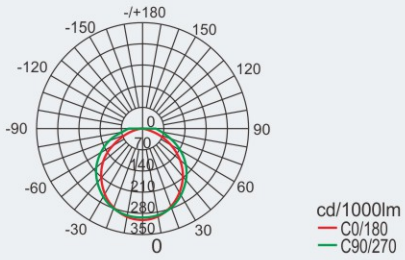

BAY51-D-36x2□□、BAY51-D-28x2□

Lamp power (W)	Rated luminous flux (Lamp tube)	Luminaire efficiency
T8 36 x 2	6500lm	65%

(without external reflector)

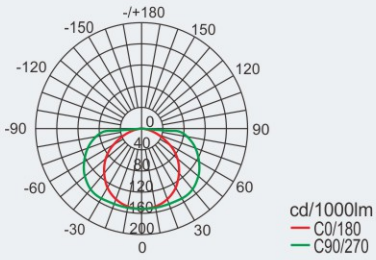

BAY51-D-58x2□□、BAY51-D-35x2□

Lamp power (W)	Rated luminous flux (Lamp tube)	Luminaire efficiency
T8 58 x 2	10000lm	65%

(with external reflector)

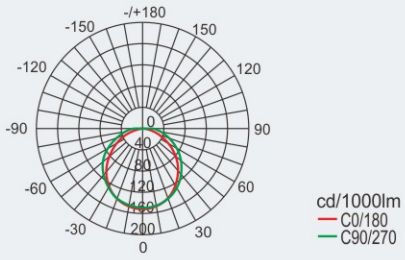

BAY51-D-58x2□□、BAY51-D-35x2□

Lamp power (W)	Rated luminous flux (Lamp tube)	Luminaire efficiency
T8 58 x 2	10000lm	65%

(without external reflector)

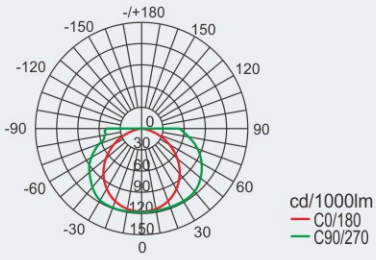

We can provide lighting design and data by professional lighting software DIALUX based upon simulated site situation on request.

Technical data

Explosion-proof light fittings BAY51-D-□□×□□□

Explosion protection	
Global (IECEx)	IECEx CQM 16.0023X
Gas and dust	Ex db IIB T6 Gb Ex db IIB+H_2 T6 Gb Ex tb IIIC T80℃ Db IP66
Europe (ATEX)	TÜV CY 21 ATEX 0206465X
Gas and dust	Ⓔx II 2 G Ex db IIB T6 Gb Ⓔx II 2 G Ex db IIB+H_2 T6 Gb Ⓔx II 2 D Ex tb IIIC T80℃ Db
Certificates	IECEx; ATEX; CU-TR
Conformity to standards	EN 60079-0, EN 60079-1, EN 60079-31, IEC 60079-0, IEC 60079-1, IEC 60079-31
Material	
Enclosure	Copper-free Aluminium Alloy, powder coated surface, yellow (RAL1021)
Glass tube	Toughened glass, stands 4J impact
Ballast	Electronic ballast
LED driver	Wide voltage input, CC-CV (constant current - constant voltage) output, with function of distributed current, constant current, surge-proof and anti-electromagnetic interference, and protection against overcurrent, open circuit, and short circuit.
Wire guard (optional)	Powder coated carbon steel (white) or stainless steel
External reflector (optional)	Powder coated pure aluminium
Exposed fastener	Stainless steel
Lamp	
Lamp specification	LED module (supplied with the light fittings)
Lamp power (W)	LED: 9Wx2, 18Wx2, 28Wx2
Colour rendering index (Ra)	LED: ⩾80
LED Colour temperature (CCT)	5000K Note: nature white is available in general. Warm white or cool white is optional, please specify when ordering.
Rated voltage	LED: 100-275V AC 50/60Hz
Earthing protection	M5 (internal & external earth bolts)
Degree of protection	IP66
Ambient temperature	Ex db IIB+H_2 T6 Gb for Tamb: -20℃~+55℃ Ex db IIB T6 Gb and Ex tb IIIC T80℃ Db IP66 for Tamb: -60℃~+55℃ Ⓔx II 2 G Ex db IIB+H_2 T6 Gb for Tamb: -20℃~+55℃ Ⓔx II 2 G Ex db IIB T6 Gb and Ⓔx II 2 D Ex tb IIIC T80℃ Db for Tamb: -60℃~+55℃
Terminal	3 x 1.5~4mm^2 (L+N+PE)
Cable entries	2 x M25 x 1.5 plugs
Cable gland(optional)	DQM-II (Ex d) or DQM-III (Ex d) is recommended. Please see P7/22~31
Emergency data	
Emergency unit	Special emergency controller and battery pile, with protection against overcharge and overdischarge
Emergency power (W)	18W x 30%, 28W x 30%
Emergency starting time	0.3s
Charging time	24h
Emergency lighting time	120min (180min is optional)

Selection table

Type / Ordering code	Lamp power(W)	Weight (kg)	Type / Ordering code	Lamp power(W)	Weight (kg)	Type / Ordering code	Lamp power(W)	Weight (kg)
BAY51-D-LED 9 x 2G1	9×2	5.75	BAY51-D-LED 18 x 2G1	18×2	8.35	BAY51-D-LED 28 x 2G1	28×2	9.62
BAY51-D-LED 9 x 2G2	9×2	6.90	BAY51-D-LED 18 x 2G2	18×2	9.53	BAY51-D-LED 28 x 2G2	28×2	10.80
BAY51-D-LED 9 x 2X	9×2	5.42	BAY51-D-LED 18 x 2X	18×2	8.03	BAY51-D-LED 28 x 2X	28×2	9.30
BAY51-D-LED 9 x 2L	9×2	5.54	BAY51-D-LED 18 x 2L	18×2	8.15	BAY51-D-LED 28 x 2L	28×2	9.42
			BAY51-D-LED 18 x 2G1J	18×2	12.50	BAY51-D-LED 28 x 2G1J	28×2	13.72
			BAY51-D-LED 18 x 2G2J	18×2	13.23	BAY51-D-LED 28 x 2G2J	28×2	14.50
			BAY51-D-LED 18 x 2XJ	18×2	11.73	BAY51-D-LED 28 x 2XJ	28×2	13.40
			BAY51-D-LED 18 x 2LJ	18×2	11.85	BAY51-D-LED 28 x 2LJ	28×2	13.52

Note: 1. Products above include all the mounting accessories listed in Mounting Accessories & Spare Parts Table (see P2/31).
2. The light fittings are supplied without wire guard and external reflector. Please specify when ordering.

Light Fittings for Fluorescent Lamp
BAY51-D Series Explosion-proof Light Fittings

Photometric data
Note: LED luminous flux is from the standard product of which colour temperature is 5000K

BAY51-D-LED 9x2□

Lamp power (W)	Luminous flux	Wattage
LED 9 x 2	1999lm	19W

(with external reflector)

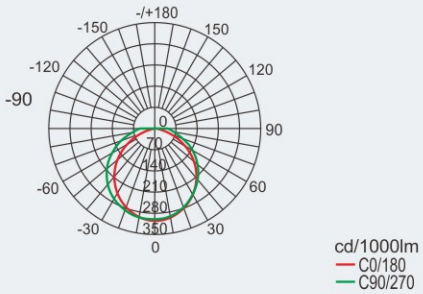

BAY51-D-LED 9x2□

Lamp power (W)	Luminous flux	Wattage
LED 9 x 2	1999lm	19W

(without external reflector)

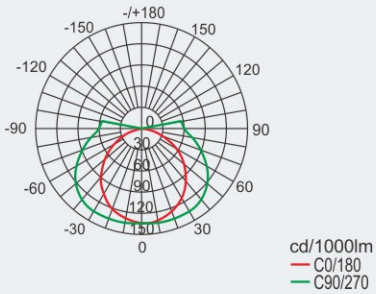

BAY51-D-LED 18x2□□

Lamp power (W)	Luminous flux	Wattage
LED 18 x 2	3920lm	36W

(with external reflector)

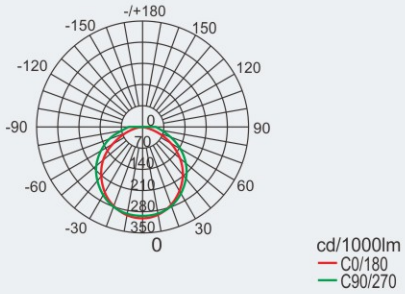

BAY51-D-LED 18x2□□

Lamp power (W)	Luminous flux	Wattage
LED 18 x 2	3920lm	36W

(without external reflector)

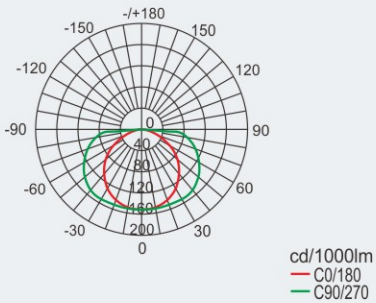

BAY51-D-LED 28x2□□

Lamp power (W)	Luminous flux	Wattage
LED 28 x 2	5900lm	56W

(with external reflector)

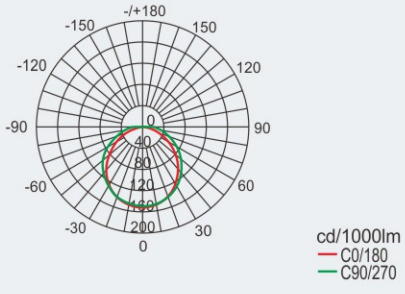

BAY51-D-LED 28x2□□

Lamp power (W)	Luminous flux	Wattage
LED 28 x 2	5900lm	56W

(without external reflector)

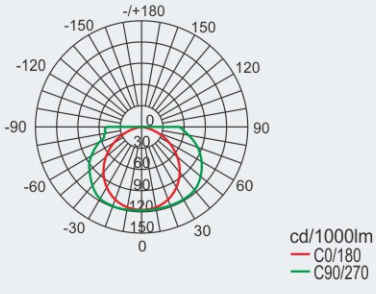

We can provide lighting design and data by professional lighting software DIALUX based upon simulated site situation on request.

Mounting type for light fittings with dual lamp tube (all dimensions in mm) - subject to alteration

Installation reference

X: ceiling type

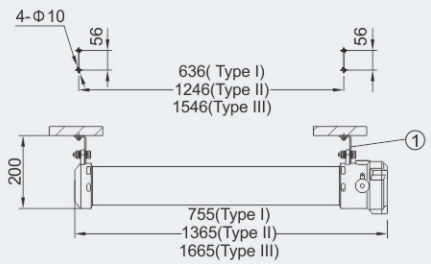

L: pole type (the pole is provided by user)

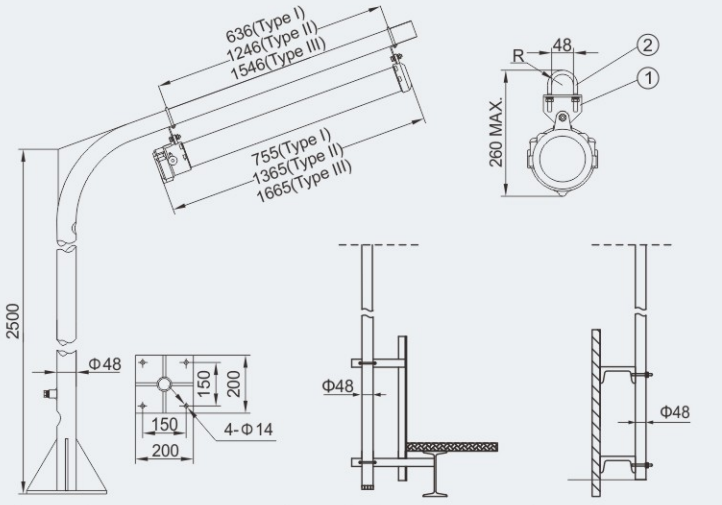

Suitable for ground pole type | Suitable for fence pole type | Suitable for wall pole type

G1: pendant pole type 1

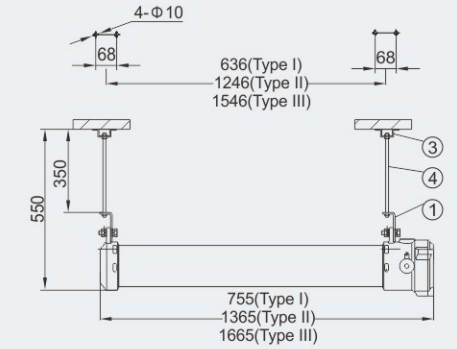

G2: pendant pole type 2

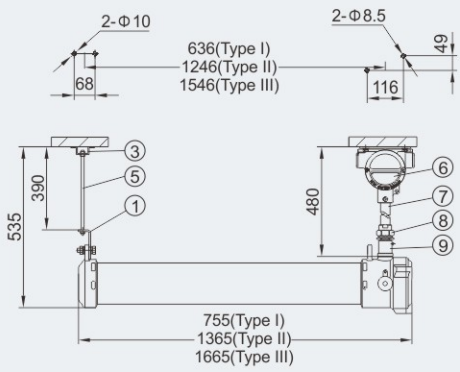

Mounting Accessories & Spare Parts Table (light fittings with dual lamp tube)

Supplied according to the mounting type

Mounting type	Accessories			Ordering code	Weight(kg)
	Name	Qty	Illustration		
X: ceiling type	① Mounting plate	2	Stainless steel	51DX01	0.25
L: pole type	① Mounting plate	2	Stainless steel	51DX01	0.25
	② U type pipe clamp	2	Stainless steel	51L01	0.15
G1: pendant pole type 1	① Mounting plate	2	Stainless steel	51DX01	0.25
	③ Mounting bracket	2	Stainless steel	51S01G1	0.04
	④ M8 screw	2	Stainless steel, length: 350mm	51S01G2	0.12
G2: pendant pole type 2	① Mounting plate	2	Stainless steel	51DX01	0.25
	③ Mounting bracket	1	Stainless steel	51S01G1	0.04
	⑤ M8 screw	1	Stainless steel, length: 390mm	51S01G3	0.15
	⑥ BHD51 Explosion-proof junction box	1	Copper-free Aluminium Alloy (Ex d IIC)	BHD51-F	0.80
	⑦ Straight pipe (M25 x 1.5)	1	Length: 300mm	81G01	0.41
	⑧ BGJ-III Explosion-proof connector	1	M25x1.5(F)/M25x1.5(M) Stainless steel	81D03	0.26
	⑨ Explosion-proof connector	1	M25x1.5(F)/M25x1.5(M) Stainless steel	51G201	0.22

Note: Accessories not in the table shall be supplied by user.

Light Fittings for Fluorescent Lamp
HRY92-LED Series Explosion-proof Light Fittings



- Explosion Protection to
  -CENELEC
  -IEC
  -NEC
- Can be used in
  Zone 1 and Zone 2
  Zone 21 and Zone 22
  Class I, Zone 1 and Zone 2
  Class I, Division 1, Groups B, C, D
- Two enclosure types: Type I and Type II
  Available lamp and power
  Type I: 20W, 40W
  Type II: 60W, 40W with emergency, 60W with emergency
- The glass tube stands 4J impact.
- Enclosure in Copper-free Aluminium Alloy, powder coated surface, yellow (RAL1021).
- Built-in LED driver, wide voltage input, CC-CV (constant current - constant voltage) output, power factor ≥0.95.
- Emergency functions are available on request.

Catalogue number logic

HRY92-LED □ □ □

- J: Emergency lighting (optional)
- Mounting
  - G1: pendant pole type 1
  - G2: pendant pole type 2
  - L: pole type
  - X: ceiling type
- Lamp power (W)
- Explosion-proof light fittings

Zones 1&2; 21&22

Technical data

Explosion-proof light fittings HRY92-LED □□□

Explosion protection	
Global (IECEx)	IECEx CQM 24.0040X
Gas and dust	Ex db IIB T6 Gb Ex db IIB+H_2 T6 Gb Ex tb IIIC T80℃ Db
Europe (ATEX)	ATEX (applied for)
Gas and dust	Ⓔx II 2 G Ex db IIB T6 Gb Ⓔx II 2 G Ex db IIB+H_2 T6 Gb Ⓔx II 2 D Ex tb IIIC T80℃ Db
Certificates	IECEx; ATEX
Conformity to standards	EN 60079-0, EN 60079-1, EN 60079-31, IEC 60079-0, IEC 60079-1, IEC 60079-31
Material	
Enclosure	Copper-free Aluminium Alloy, powder coated surface, yellow (RAL1021)
Glass tube	Toughened glass, stands 4J impact
LED driver	Wide voltage input, CC-CV (constant current - constant voltage) output, with function of distributed current, constant current, surge-proof and anti-electromagnetic interference, and protection against overcurrent, open circuit, and short circuit.
Wire guard (optional)	Powder coated carbon steel (white) or stainless steel
External reflector (optional)	Powder coated pure aluminium
Exposed fastener	Stainless steel
Lamp	
Lamp specification	LED SMT (supplied with the light fittings)
Lamp power (W)	20W, 40W, 60W
Colour rendering index (Ra)	⩾80
LED Colour temperature (CCT)	5000K Note: nature white is available in general. Warm white or cool white is optional, please specify when ordering.
Rated voltage	100-277V AC 50/60Hz
Earthing protection	M5 (internal & external earth bolts)
Degree of protection	IP66
Ambient temperature	IIB/IIIC for Tamb: -60℃~+55℃ IIB+H_2 for Tamb: -20℃~+55℃
Terminal	3 x 1.5~4mm^2 (L+N+PE)
Cable entries	2 x M25 x 1.5 plugs
Cable gland(optional)	DQM-II (Ex d) or DQM-III (Ex d) is recommended. Please see P7/22~31
Emergency data	
Emergency unit	Special emergency controller and battery pile, with protection against overcharge and overdischarge
Emergency power (W)	40W x 30%, 60W x 30%
Emergency starting time	0.3s
Charging time	24h
Emergency lighting time	120min (180min is optional)

Selection table

Type / Ordering code	Lamp power(W)	Weight (kg)	Type / Ordering code	Lamp power(W)	Weight (kg)	Type / Ordering code	Lamp power(W)	Weight (kg)
HRY92-LED 20G1	20	5.75	HRY92-LED 40G1	40	5.80	HRY92-LED 60G1	60	8.35
HRY92-LED 20G2	20	6.90	HRY92-LED 40G2	40	6.95	HRY92-LED 60G2	60	9.53
HRY92-LED 20GX	20	5.42	HRY92-LED 40GX	40	5.47	HRY92-LED 60GX	60	8.03
HRY92-LED 20GL	20	5.54	HRY92-LED 40GL	40	5.59	HRY92-LED 60GL	60	8.15
			HRY92-LED 40G1J	40	6.60	HRY92-LED 60G1J	60	9.15
			HRY92-LED 40G2J	40	7.75	HRY92-LED 60G2J	60	10.33
			HRY92-LED 40GXJ	40	6.27	HRY92-LED 60GXJ	60	8.83
			HRY92-LED 40GLJ	40	6.39	HRY92-LED 60GLJ	60	8.95

Note: 1. Products above include all the mounting accessories listed in Mounting Accessories & Spare Parts Table (see P2/35).
2. The light fittings are supplied without wire guard and external reflector. Please specify when ordering.

Light Fittings for Fluorescent Lamp
HRY92-LED Series Explosion-proof Light Fittings

Photometric data Note: LED luminous flux is from the standard product of which colour temperature is 5000K

HRY92-LED 20□□ (without external reflector)

Lamp power (W)	Luminous flux	Wattage
LED 20	2600lm	21W

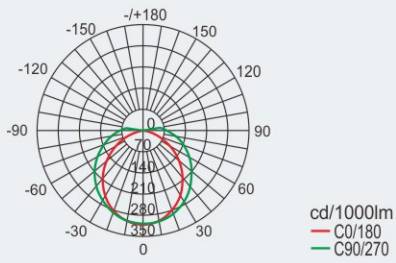

HRY92-LED 40□□ (without external reflector)

Lamp power (W)	Luminous flux	Wattage
LED 40	5300lm	41W

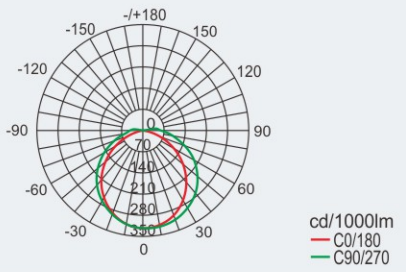

HRY92-LED 60□□ (without external reflector)

Lamp power (W)	Luminous flux	Wattage
LED 60	7500lm	58W

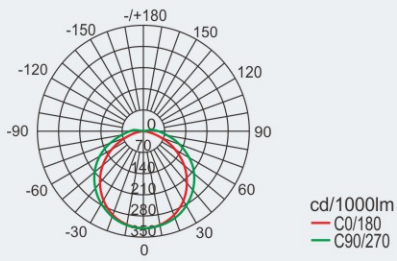

We can provide lighting design and data by professional lighting software DIALUX based upon simulated site situation on request.

Dimension drawings (all dimensions in mm) - subject to alteration

Without external reflector

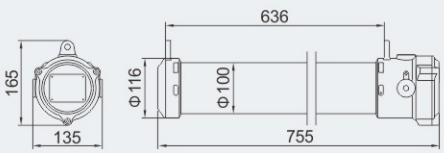

HRY92-LED20□
HRY92-LED40□

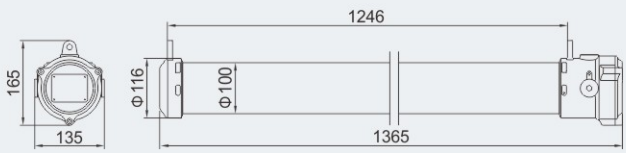

HRY92-LED40□J
HRY92-LED60□
HRY92-LED60□J

With external reflector

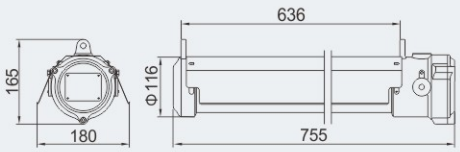

HRY92-LED20□
HRY92-LED40□



HRY92-LED40□J
HRY92-LED60□
HRY92-LED60□J

Mounting type for light fittings with dual lamp tube (all dimensions in mm) - subject to alteration

Installation reference

X: ceiling type

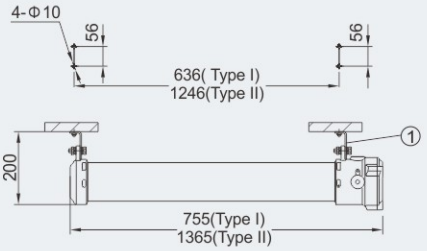

L: pole type (the pole is provided by user)

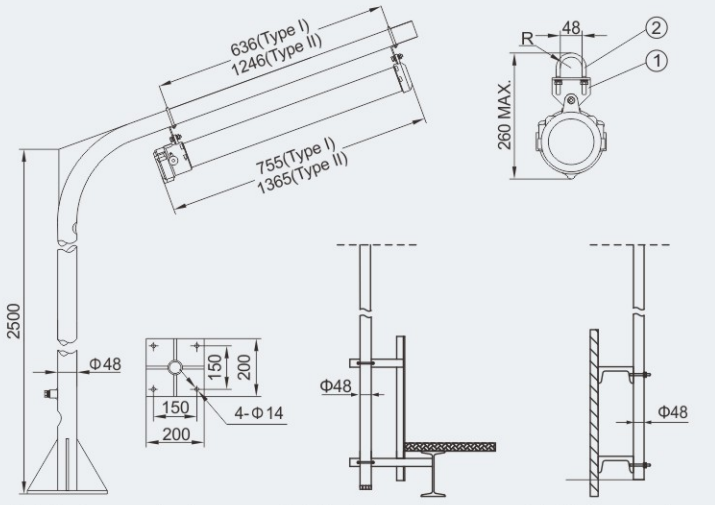

Suitable for ground pole type | Suitable for fence pole type | Suitable for wall pole type

G1: pendant pole type 1

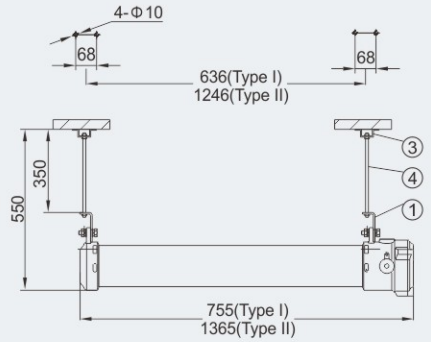

G2: pendant pole type 2

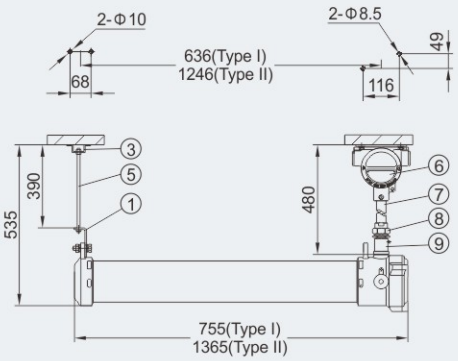

Mounting Accessories & Spare Parts Table (light fittings with dual lamp tube)

Supplied according to the mounting type

Mounting type	Accessories			Ordering code	Weight(kg)
	Name	Qty	Illustration		
X: ceiling type	① Mounting plate	2	Stainless steel	51DX01	0.25
L: pole type	① Mounting plate	2	Stainless steel	51DX01	0.25
	② U type pipe clamp	2	Stainless steel	51L01	0.15
G1: pendant pole type 1	① Mounting plate	2	Stainless steel	51DX01	0.25
	③ Mounting bracket	2	Stainless steel	51S01G1	0.04
	④ M8 screw	2	Stainless steel, length: 350mm	51S01G2	0.12
G2: pendant pole type 2	① Mounting plate	2	Stainless steel	51DX01	0.25
	③ Mounting bracket	1	Stainless steel	51S01G1	0.04
	⑤ M8 screw	1	Stainless steel, length: 390mm	51S01G3	0.15
	⑥ BHD51 Explosion-proof junction box	1	Copper-free Aluminium Alloy (Ex d IIC)	BHD51-F	0.80
	⑦ Straight pipe (M25 x 1.5)	1	Length: 300mm	81G01	0.41
	⑧ BGJ-III Explosion-proof connector	1	M25x1.5(F)/M25x1.5(M) Stainless steel	81D03	0.26
	⑨ Explosion-proof connector	1	M25x1.5(F)/M25x1.5(M) Stainless steel	51G201	0.22

Note: Accessories not in the table shall be supplied by user.

Light Fittings for Fluorescent Lamp
HRY97 Series Explosion-proof LED Light Fittings



- Explosion Protection to
  -CENELEC
  -IEC
  -NEC
- Can be used in
  Zone 1 and Zone 2
  Zone 21 and Zone 22
  Class I, Zone 1 and Zone 2
  Class I, Division 1, Groups B, C, D
- Three enclosure types: Type I, Type II and Type III
  Available lamp and power
  Type I: 20W
  Type II: 40W, 20W with emergency, 40W with emergency
  Type III: 60W, 60W with emergency
- Enclosure in Copper-free Aluminium Alloy, powder coated surface, yellow (RAL1021).
- Built-in LED driver, wide voltage input, CC-CV (constant current - constant voltage) output, power factor ≥0.95.
- The lamps can be equipped with emergency device. There are two options for emergency duration: 90min and 180min. Standard configuration is 90min.

Catalogue number logic

HRY97 - □ □ □

- J: Emergency lighting (optional)
- Mounting
  - X: ceiling type
  - B: wall type
  - G: pendant pole type
  - W: bend pole type
  - F: flange type
  - H: fence type
  - QT: Derrick-specific type
- Lamp power (W)
- Explosion-proof LED light fittings

Dimension drawings (all dimensions in mm) - subject to alteration

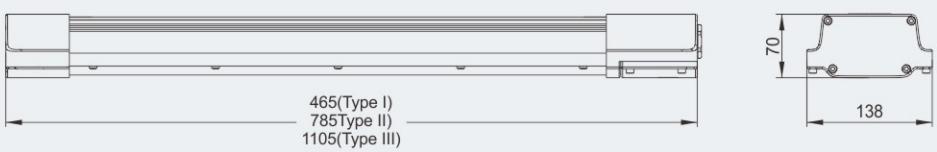

Zones 1&2; 21&22

Technical data

Explosion-proof LED light fittings HRY97-□□□

Explosion protection	
Global (IECEx)	IECEx CQM 24.0001X
Gas and dust	Ex db eb mb IIC T5/T4 Gb[1)] Ex tb IIIC T70℃/T90℃ Db[1)]
Europe (ATEX)	TÜV CY 25 ATEX 0207222 X
Gas and dust	Ⓔx II 2 G Ex db eb mb IIC T5/T4 Gb[1)] Ⓔx II 2 D Ex tb IIIC T70℃/T90℃ Db[1)]
	[1)] See Selection Table
Certificates	IECEx; ATEX
Conformity to standards	EN 60079-0, EN 60079-1, EN 60079-7, EN 60079-18, EN 60079-31, IEC 60079-0, IEC 60079-1, IEC 60079-7, IEC 60079-18, IEC 60079-31
Material	
Enclosure	Copper-free Aluminium Alloy, powder coated surface, yellow (RAL1021)
Diffuser	Polycarbonate, stands 4J impact
LED driver	Wide voltage input, CC-CV (constant current - constant voltage) output, with function of distributed current, constant current, surge-proof and anti-electromagnetic interference, and protection against overcurrent, open circuit, and short circuit.
Exposed fastener	Stainless steel
Lamp	
Lamp specification	LED module (supplied with the light fittings)
Lamp power (W)	20W, 40W, 60W
Colour rendering index (Ra)	⩾80
LED Colour temperature (CCT)	5000K Note: nature white is available in general. Warm white or cool white is optional, please specify when ordering.
Rated voltage	100-277V AC 50/60Hz 130~250V DC
Earthing protection	M4 (internal & external earth bolts)
Degree of protection	IP66
Ambient temperature	-40℃~+60℃(+58℃)(+40℃)[1)] [1)] See Selection Table
Terminal	3 x 1.5~4mm^2 (L+N+PE)
Cable entries	2 x M25 x 1.5 plugs
Emergency data	
Emergency unit	Special emergency controller and battery pack, with protection against overcharge and overdischarge
Emergency power (W)	20W x 70%, 40W x 35%, 60W x 23%
Emergency starting time	0.3s
Charging time	24h
Emergency lighting time	90min (180min is optional)
Battery	Ni-CD (Ni-MH is optional)

Configuration table for lighting fixtures with emergency features

Model	Lamp power	Emergency lighting time	Battery type	Enclosure type
HRY97-20□J	20W	90min	Ni-CD	Type II
HRY97-40□J	40W	90min	Ni-CD	Type II
HRY97-60□J	60W	90min	Ni-CD	Type III
HRY97-20□J	20W	180min	Ni-CD	Type III
HRY97-40□J	40W	180min	Ni-CD	Type III
HRY97-60□J	60W	180min	Ni-CD	Type III
HRY97-20□J	20W	90min	Ni-MH	Type II
HRY97-40□J	40W	90min	Ni-MH	Type II
HRY97-60□J	60W	90min	Ni-MH	Type III
HRY97-20□J	20W	180min	Ni-MH	Type II
HRY97-40□J	40W	180min	Ni-MH	Type II
HRY97-60□J	60W	180min	Ni-MH	Type III

Light Fittings for Fluorescent Lamp
HRY97 Series Explosion-proof LED Light Fittings

Selection table

Rated power(W)	Temperature classification					
	For non-emergency type				For emergency type	
	-40℃≤Ta≤+40℃		-40℃≤Ta≤+60℃		-40℃≤Ta≤+58℃	
	Gas	Dust	Gas	Dust	Gas	Dust
20, 40, 60	T5	T70℃	T4	T70℃	T4	T90℃

Selection table

Type / Ordering code	Lamp power(W)	Weight (kg)	Type / Ordering code	Lamp power(W)	Weight (kg)	Type / Ordering code	Lamp power(W)	Weight (kg)
HRY97-20X	20	2.90	HRY97-40X	40	4.70	HRY97-60X	60	5.50
HRY97-20G	20	3.90	HRY97-40G	40	5.70	HRY97-60G	60	6.50
HRY97-20B	20	3.30	HRY97-40B	40	5.10	HRY97-60B	60	5.90
HRY97-20W	20	3.00	HRY97-40W	40	4.80	HRY97-60W	60	5.60
HRY97-20H	20	3.00	HRY97-40H	40	4.80	HRY97-60H	60	5.60
HRY97-20F	20	3.00	HRY97-40F	40	4.80	HRY97-60F	60	5.60
HRY97-20QT	20	3.40	HRY97-40QT	40	5.20	HRY97-60QT	60	6.00
HRY97-20XJ	20	5.70	HRY97-40XJ	40	5.90	HRY97-60XJ	60	6.70
HRY97-20GJ	20	6.70	HRY97-40GJ	40	6.90	HRY97-60GJ	60	7.70
HRY97-20BJ	20	6.10	HRY97-40BJ	40	6.30	HRY97-60BJ	60	7.10
HRY97-20WJ	20	5.80	HRY97-40WJ	40	6.10	HRY97-60WJ	60	6.80
HRY97-20HJ	20	5.80	HRY97-40HJ	40	6.10	HRY97-60HJ	60	6.80
HRY97-20FJ	20	5.80	HRY97-40FJ	40	6.10	HRY97-60FJ	60	6.80
HRY97-20QTJ	20	4.60	HRY97-40QTJ	40	6.40	HRY97-60QTJ	60	7.20

Note: 1. Products above include all the mounting accessories listed in Mounting Accessories & Spare Parts Table (see P2/39).

Photometric data Note: LED luminous flux is from the standard product of which colour temperature is 5000K

HRY97-20□□

Lamp power (W)	Luminous flux	Wattage
LED 20	2500lm	21W

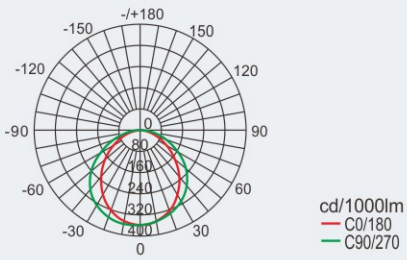

HRY97-40□□

Lamp power (W)	Luminous flux	Wattage
LED 40	5300lm	43W

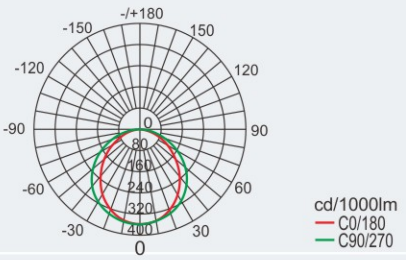

HRY97-60□□

Lamp power (W)	Luminous flux	Wattage
LED 60	7000lm	58.6W

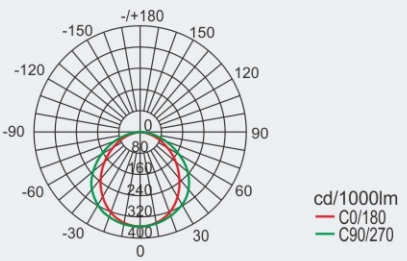

We can provide lighting design and data by professional lighting software DIALUX based upon simulated site situation on request.

Mounting type (all dimensions in mm) - subject to alteration

Installation reference

X: ceiling type

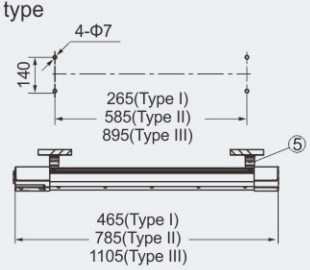

B: wall type

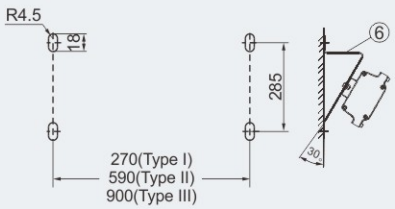

G: pendant pole type

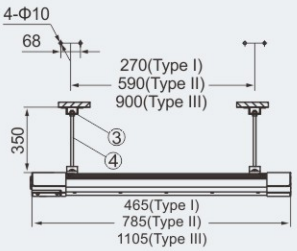

QT: derrick-specific type

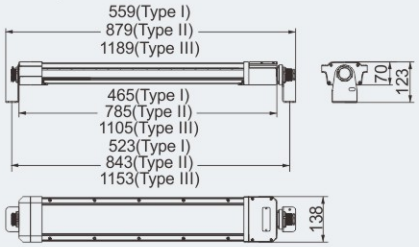

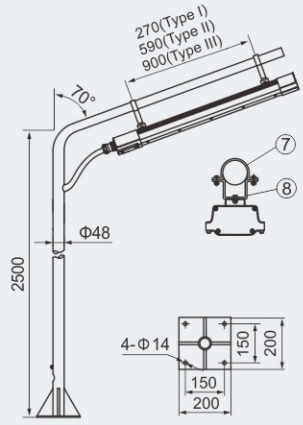

F: flange type

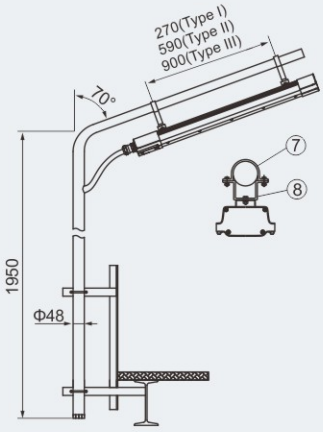

H: fence type

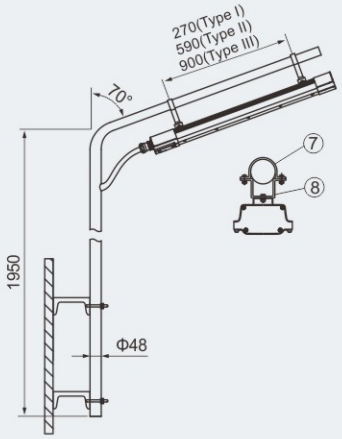

W: bend pole type

Mounting Accessories & Spare Parts Table

Supplied according to the mounting type

Mounting type	Accessories			Ordering code	Weight (kg)
	Name	Qty	Illustration		
G: pendant pole type	③.Mounting bracket	2	Stainless steel, see P2/6	51S01G1	0.04
	④.M8 Screw	2	Stainless steel, length: 350mm	51S01G2	0.12
X: ceiling type	⑤.Mounting bracket	2	Stainless steel	5136015	0.14
B: wall type	⑥.Wall bracket	2	Stainless steel, welded sheet steel	5236B02	0.10
F: flange type	⑦.G1 1/2" Pipe clamp	2	Stainless steel, see P2/7	5136014	0.04
	⑧.Mounting bracket	2	Stainless steel, see P2/7	5136012	0.04
H: fence type	⑦.G1 1/2" Pipe clamp	2	Stainless steel, see P2/7	5136014	0.04
	⑧.Mounting bracket	2	Stainless steel, see P2/7	5136012	0.04
W: bend pole type	⑦.G1 1/2" Pipe clamp	2	Stainless steel, see P2/7	5136014	0.04
	⑧.Mounting bracket	2	Stainless steel, see P2/7	5136012	0.04

Note: Accessories not in the table shall be supplied by user.

Light Fittings for Fluorescent Lamp
BnY81 Series Explosion-proof Light Fittings for Fluorescent Lamp



- Explosion protection to
  - -CENELEC
  - -IEC
  - -NEC
- Can be used in
  - Zone 2
  - Zone 21 and Zone 22
  - Class I, Zone 2
  - Class I, Division 2, Groups A, B, C, D
- Two enclosure types: Type I and Type II
- Applicable lamp power:
  - Fluorescent lamps: 18W x 1, 36W x 1
    18W x 2, 36W x 2
  - LED lamps: 9W (10W) x 1, 18W(19W) x 1, 28W(25W) x 1
    9W(10W) x 2, 18W(19W) x 2, 28W(25W) x 2
- Built-in electronic ballast, wide voltage input, rapid starting, stable performance, power factor ≥0.95.
- LED light fittings: Built-in LED driver, wide voltage input, CC-CV (constant current - constant voltage) output, power factor ≥0.95.
- End of lamp life (EOL) rectification effect protection.

Catalogue number logic

BnY81-□ □ x □ □

- Mounting
  - L: pole type
  - X: ceiling type
  - G: pendant pole type
  - D: pendant chain type
  - B: wall type
- Lamp number
- Lamp power (W)
- LED: Only for LED lamp
- Explosion-proof light fittings for fluorescent lamp

Dimension drawings (all dimensions in mm) - subject to alteration

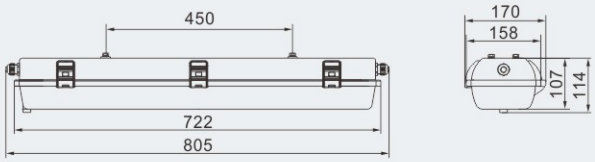

BnY81-18 x 1□; BnY81-18 x 2□;
BnY81-LED 9 x 1□; BnY81-LED 9 x 2□

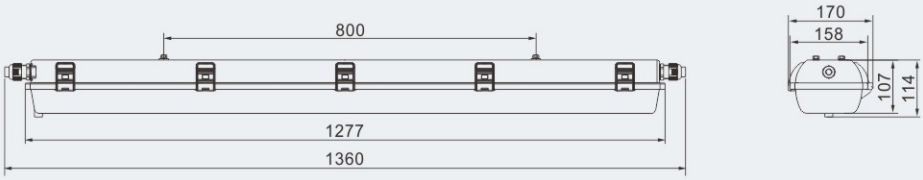

BnY81-36 x 1□; BnY81-36 x 2□
BnY81-LED 18 x 1□; BnY81-LED 18 x 2□; BnY81-LED 28 x 1□; BnY81-LED 28 x 2□

Zones 2; 21&22

Technical data

Explosion-proof light fittings for fluorescent lamp BnY81-□ × □□

Explosion protection	
Global (IECEx)	IECEx CQM 12.0046X
Gas and dust	Ex nA IIC T4 Gc Ex t IIIC T80℃ Db IP66
Europe (ATEX)	LCIE 12 ATEX 1009X (gas); LCIE 12 ATEX 3019X (dust)
Gas and dust	Ⓔx II 3 G Ex nA IIC T4 Gc Ⓔx II 2 D Ex t IIIC T80℃ Db IP66
Certificates	IECEx; ATEX
Conformity to standards	EN 60079-0, EN 60079-15, EN 60079-31 IEC 60079-0, IEC 60079-15, IEC 60079-31
Material	
Enclosure	Polycarbonate, stands 7J impact, corrosion-proof
Diffuser	Polycarbonate, high light transmission, stands 7J impact, corrosion-proof
Ballast	Electronic ballast
Exposed fastener	Stainless steel
Lamp	
Lamp specification	T8 tube (supplied with the light fittings)
Lamp power (W)	18W×1 / 18W×2 36W×1 / 36W×2
Rated voltage	100~300V AC 50/60Hz
Degree of protection	IP66
Ambient temperature	-20℃~+55℃
Terminal	3 x 1.5~4mm² (L+N+PE)
Mounting	Ceiling type, pendant pole type, pendant chain type, wall type, pole type
Cable entries	2 x Φ26: 2 x M25 x 1.5 cable glands (DQM-I Ex e, plastic).
Available cable outer diameter	Φ9~Φ16(mm);

Selection table

Type / Ordering code	Lamp power(W)	Weight (kg)	Type / Ordering code	Lamp power(W)	Weight (kg)
BnY81-18 x 1X	18 x 1	2.25	BnY81-36 x 1X	36 x 1	3.55
BnY81-18 x 1G	18 x 1	2.45	BnY81-36 x 1G	36 x 1	3.75
BnY81-18 x 1D	18 x 1	2.60	BnY81-36 x 1D	36 x 1	3.90
BnY81-18 x 1B	18 x 1	2.60	BnY81-36 x 1B	36 x 1	3.90
BnY81-18 x 1L	18 x 1	2.30	BnY81-36 x 1L	36 x 1	3.60
BnY81-18 x 2X	18 x 2	2.50	BnY81-36 x 2X	36 x 2	3.70
BnY81-18 x 2G	18 x 2	2.70	BnY81-36 x 2G	36 x 2	4.10
BnY81-18 x 2D	18 x 2	2.85	BnY81-36 x 2D	36 x 2	4.25
BnY81-18 x 2B	18 x 2	2.85	BnY81-36 x 2B	36 x 2	4.25
BnY81-18 x 2L	18 x 2	2.55	BnY81-36 x 2L	36 x 2	3.95

Note: 1. Products above include all the mounting accessories listed in Mounting Accessories & Spare Parts Table (see P2/45).

Light Fittings for Fluorescent Lamp
BnY81 Series Explosion-proof Light Fittings for Fluorescent Lamp

Photometric data

BnY81-18x1□

Lamp power (W)	Rated luminous flux (Lamp tube)	Luminaire efficiency
18 x 1	1300lm	70%

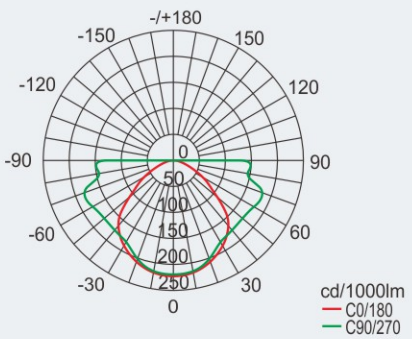

BnY81-18x2□□

Lamp power (W)	Rated luminous flux (Lamp tube)	Luminaire efficiency
18 x 2	2600lm	65%

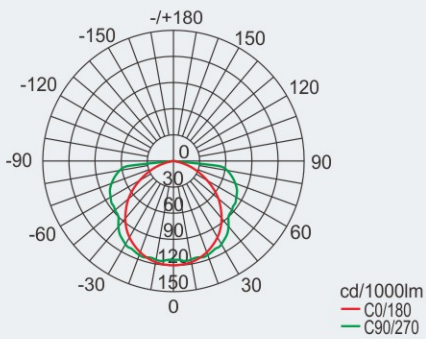

BnY81-36x1□

Lamp power (W)	Rated luminous flux (Lamp tube)	Luminaire efficiency
36 x 1	3250lm	65%

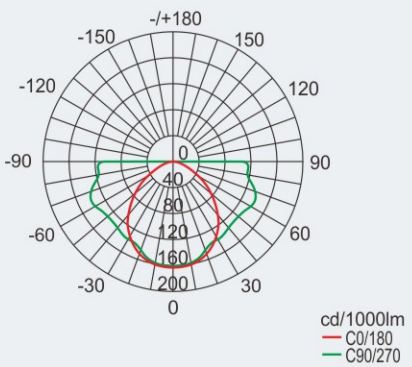

BnY81-36x2□□

Lamp power (W)	Rated luminous flux (Lamp tube)	Luminaire efficiency
36 x 2	6500lm	65%

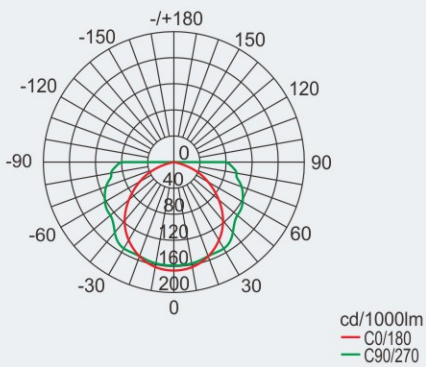

We can provide lighting design and data by professional lighting software DIALUX based upon simulated site situation on request.

Technical data

Explosion-proof light fittings for fluorescent lamp BnY81-LED□ × □□

Explosion protection	
Global (IECEx)	IECEx CQM 12.0046X
Gas and dust	Ex nA IIC T4 Gc Ex t IIIC T80℃ Db IP66
Europe (ATEX)	LCIE 12 ATEX 1009X (gas); LCIE 12 ATEX 3019X (dust)
Gas and dust	Ⓔx II 3 G Ex nA IIC T4 Gc Ⓔx II 2 D Ex t IIIC T80℃ Db IP66
Certificates	IECEx; ATEX
Conformity to standards	EN 60079-0, EN 60079-15, EN 60079-31 IEC 60079-0, IEC 60079-15, IEC 60079-31
Material	
Enclosure	Polycarbonate, stands 7J impact, corrosion-proof
Diffuser	Polycarbonate, high light transmission, stands 7J impact, corrosion-proof
Exposed fastener	Stainless steel
LED driver	Wide voltage input, CC-CV (constant current - constant voltage) output, power factor ≥0.95, with function of distributed current, constant current, surge-proof and anti-electromagnetic interference, and protection against overcurrent, open circuit, and short circuit.
Lamp	
Lamp specification	LED module (supplied with the light fittings)
Lamp power (W)	9W×1, 9W×2, 18W×1, 18W×2, 28W×1, 28W×2
Colour rendering index (Ra)	⩾80
Colour temperature (CCT)	5000K Note: nature white is available in general. Warm white or cool white is optional, please specify when ordering.
Rated voltage	110~264V AC 50/60Hz
Degree of protection	IP66
Ambient temperature	-20℃~+55℃
Terminal	3 x 1.5~4mm^2 (L+N+PE)
Mounting	Ceiling type, pendant pole type, pendant chain type, wall type, pole type
Cable entries	2 x Φ26: 2 x M25 x 1.5 cable glands (DQM-I Ex e, plastic).
Available cable outer diameter	Φ9~Φ16(mm)

Selection table

Type / Ordering code	Lamp power(W)	Weight (kg)	Type / Ordering code	Lamp power(W)	Weight (kg)	Type / Ordering code	Lamp power(W)	Weight (kg)
BnY81-LED 9 x 1X	9 x 1	2.15	BnY81-LED 18 x 1X	18 x 1	3.60	BnY81-LED 28 x 1X	28 x 1	3.80
BnY81-LED 9 x 1G	9 x 1	2.25	BnY81-LED 18 x 1G	18 x 1	3.80	BnY81-LED 28 x 1G	28 x 1	4.00
BnY81-LED 9 x 1D	9 x 1	2.40	BnY81-LED 18 x 1D	18 x 1	3.95	BnY81-LED 28 x 1D	28 x 1	4.20
BnY81-LED 9 x 1B	9 x 1	2.40	BnY81-LED 18 x 1B	18 x 1	3.95	BnY81-LED 28 x 1B	28 x 1	4.20
BnY81-LED 9 x 1L	9 x 1	2.20	BnY81-LED 18 x 1L	18 x 1	3.65	BnY81-LED 28 x 1L	28 x 1	3.90
BnY81-LED 9 x 2X	9 x 2	2.35	BnY81-LED 18 x 2X	18 x 2	3.95	BnY81-LED 28 x 2X	28 x 2	4.95
BnY81-LED 9 x 2G	9 x 2	2.55	BnY81-LED 18 x 2G	18 x 2	4.15	BnY81-LED 28 x 2G	28 x 2	5.15
BnY81-LED 9 x 2D	9 x 2	2.70	BnY81-LED 18 x 2D	18 x 2	4.30	BnY81-LED 28 x 2D	28 x 2	5.25
BnY81-LED 9 x 2B	9 x 2	2.70	BnY81-LED 18 x 2B	18 x 2	4.30	BnY81-LED 28 x 2B	28 x 2	5.30
BnY81-LED 9 x 2L	9 x 2	2.40	BnY81-LED 18 x 2L	18 x 2	4.00	BnY81-LED 28 x 2L	28 x 2	5.00

Note: 1. Products above include all the mounting accessories listed in Mounting Accessories & Spare Parts Table (see P2/45).

Light Fittings for Fluorescent Lamp
BnY81 Series Explosion-proof Light Fittings for Fluorescent Lamp

Photometric data
Note: LED luminous flux is from the standard product of which colour temperature is 5000K

BnY81-LED 9x1□

Lamp power (W)	Luminous flux	Wattage
9 x 1	920lm	9W

Rated luminous flux (Lamp tube) 9Wx1: 1080lm

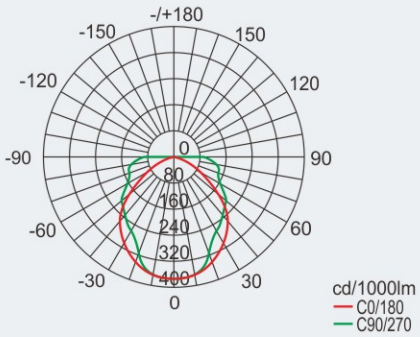

BnY81-LED 9x2□

Lamp power (W)	Luminous flux	Wattage
9 x 2	1900lm	18.5W

Rated luminous flux (Lamp tube) 9Wx2: 2160lm

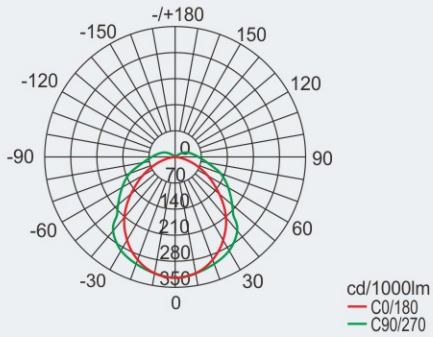

BnY81-LED 18x1□

Lamp power (W)	Luminous flux	Wattage
18 x 1	1890lm	18W

Rated luminous flux (Lamp tube) 18Wx1: 2160lm

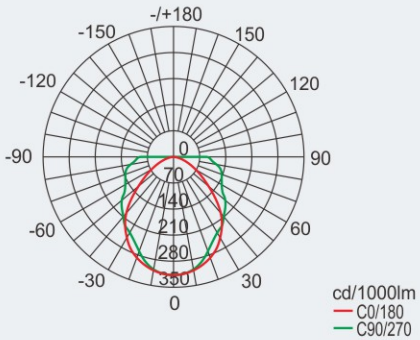

BnY81-LED 18x2□

Lamp power (W)	Luminous flux	Wattage
18 x 2	3835lm	36.5W

Rated luminous flux (Lamp tube) 18Wx2: 4320lm

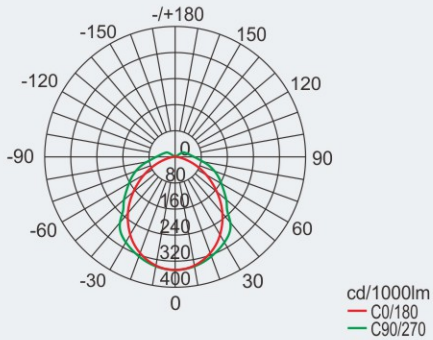

BnY81-LED 28x1□

Lamp power (W)	Luminous flux	Wattage
28 x 1	2885lm	28W

Rated luminous flux (Lamp tube) 28Wx1: 3360lm

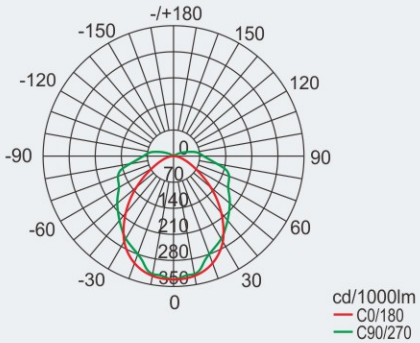

BnY81-LED 28x2□

Lamp power (W)	Luminous flux	Wattage
28 x 2	5825lm	56W

Rated luminous flux (Lamp tube) 28Wx2: 6720lm

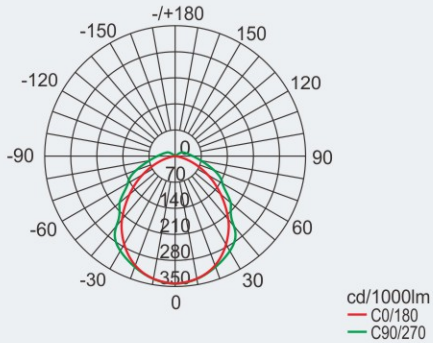

We can provide lighting design and data by professional lighting software DIALUX based upon simulated site situation on request.

Mounting type (all dimensions in mm) - subject to alteration

Installation reference

D: pendant chain type

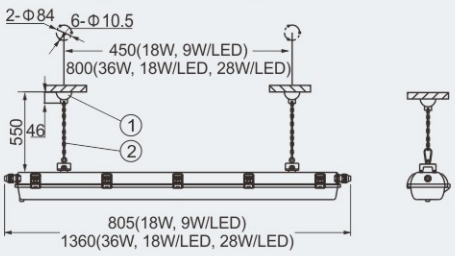

G: pendant pole type

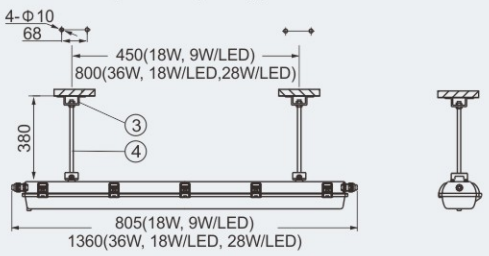

X:ceiling type

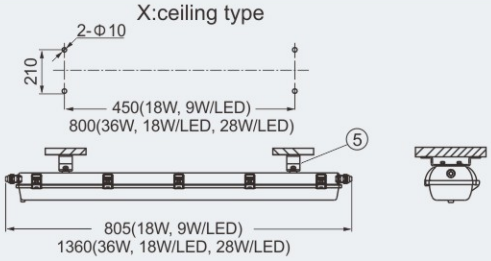

B:wall type

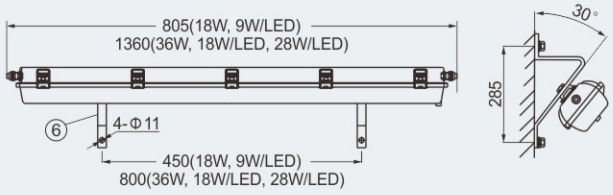

L: pole type (the pole is provided by user)

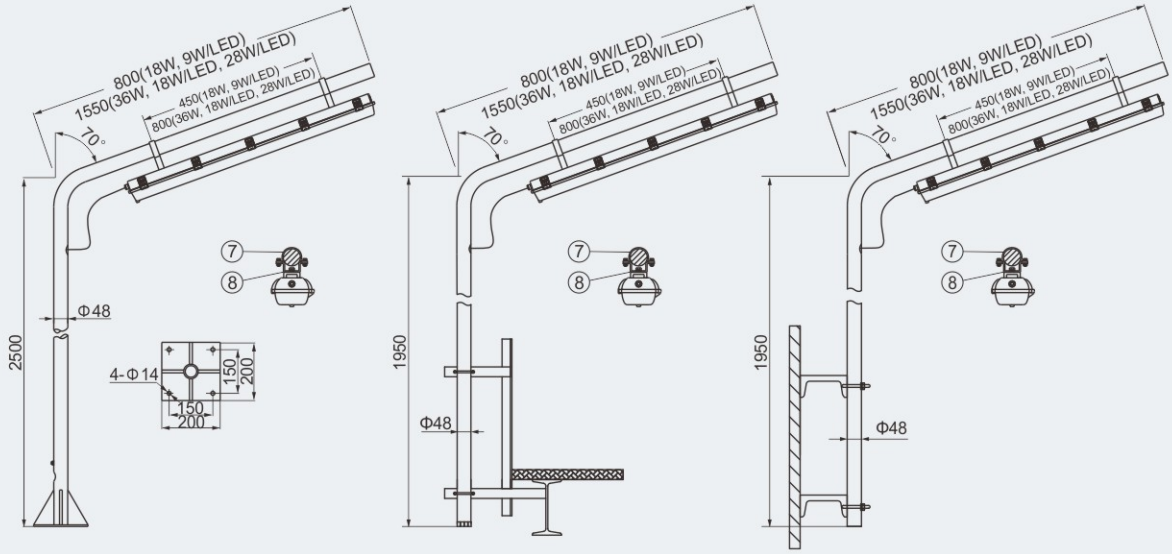

Suitable for ground pole type | Suitable for fence pole type | Suitable for wall pole type

Mounting Accessories & Spare Parts Table

Supplied according to the mounting type

Mounting type	Accessories			Ordering code	Weight (kg)
	Name	Qty	Illustration		
D: pendant chain type	①.Sucker	2	See P2/6	5136017	0.15
	②.Chain	2	Length: 450mm	5136016	0.08
G: pendant pole type	③.Mounting bracket	2	Stainless steel, see P2/6	51S01G1	0.04
	④.M8 Screw	2	Stainless steel, length: 350mm	51S01G2	0.12
X: ceiling type	⑤.Mounting bracket	2	Stainless steel, see P2/7	5136015	0.20
B: wall type	⑥.Wall bracket	2	Stainless steel, welded sheet steel	5236B02	0.25
L: pole type	⑦.G1 1/2" Pipe clamp	2	Stainless steel, see P2/7	5136014	0.04
	⑧.Mounting bracket	2	Stainless steel, see P2/7	5136012	0.04

Note: Accessories not in the table shall be supplied by user.

Light Fittings for Fluorescent Lamp
BnY81-LED Series Explosion-proof Light Fittings (ec type)



- Explosion protection to
  - -CENELEC
  - -IEC
  - -NEC
- Can be used in
  - Zone 2
  - Zone 21 and Zone 22
  - Class I, Zone 2
  - Class I, Division 2, Groups A, B, C, D
- Two enclosure types: Type I and Type II
- Applicable lamp power：
  - LED lamp tube: 9W x 2, 14W x 2, 28W x 2
  - LED SMT: 20W, 40W, 60W
- LED light fittings: Built-in LED driver, wide voltage input, CC-CV (constant current - constant voltage) output, power factor ≥0.95.
- Emergency functions are available on request.

Catalogue number logic

BnY81 - LED □ x □ □ □

- J: Emergency lighting (optional)
- Mounting
  - L: pole type
  - X: ceiling type
  - B: wall type
  - D: pendant chain type
  - G: pendant pole type
- Number of light sources (No annotation are required for LED SMT)
- Light source power (W)
- LED: LED light source
- Explosion-proof light fittings for fluorescent lamp

Dimension drawings (all dimensions in mm) - subject to alteration

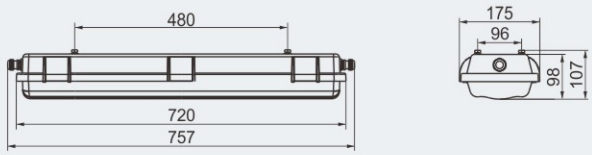

Type I: BnY81-LED 9 x 2□; BnY81-LED 9 x 2□J; BnY81-LED 14 x 2□; BnY81-LED 14 x 2□J; BnY81-LED 20□; BnY81-LED 20□J; BnY81-LED 40□

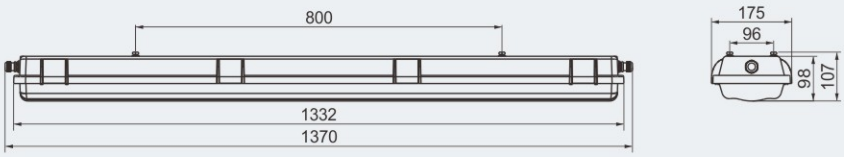

Type II: BnY81-LED 28 x 2□, BnY81-LED 28 x 2□J BnY81-LED 40□J, BnY81-LED 60□, BnY81-LED 60□J

Zones 2; 21&22

Technical data

Explosion-proof light fittings BnY81-LED □ × □□□

Explosion protection	
Global (IECEx)	IECEx CNE 24.0009X
Gas and dust	Ex ec mb IIC T5/T4 Gc[1)] Ex db ec mb IIC T5/T4 Gc[1)] Ex tb IIIC T80℃ Db[1)]
Europe (ATEX)	ATEX (applied for)
Gas and dust	Ⓔx II 3 G Ex ec mb IIC T5/T4 Gc[1)] Ⓔx II 3 G Ex db ec mb IIC T5/T4 Gc[1)] Ⓔx II 2 D Ex tb IIIC T80℃ Db[1)]
	[1)] See Selection Table
Certificates	IECEx; ATEX; CU-TR
Conformity to standards	EN 60079-0, EN 60079-1, EN 60079-7, EN 60079-18, EN 60079-31 IEC 60079-0, IEC 60079-1, IEC 60079-7, IEC 60079-18, IEC 60079-31
Material	
Enclosure	GRP, stands 7J impact, corrosion-proof
Diffuser	Polycarbonate, high light transmission, stands 7J impact
LED driver	Wide voltage input, CC-CV (constant current - constant voltage) output, power factor ≥0.95, with function of distributed current, constant current, surge-proof and anti-electromagnetic interference, and protection against overcurrent, open circuit, and short circuit.
Exposed fastener	Stainless steel
Lamp	
Lamp specification	LED lamp tube, LED SMT
Lamp power (W)	LED lamp tube: 9W x 2, 14W x 2, 28W x 2 LED SMT: 20W, 40W, 60W
Rated voltage	100~277V AC 50/60Hz; 130~250V DC
Degree of protection	IP66
Ambient temperature	-40℃~+60℃(+58℃)(+40℃)
Terminal	3 x 1.5~4mm^2 (L+N+PE)
Mounting	Ceiling type, pendant pole type, pendant chain type, wall type, pole type
Cable entries	3 x Φ26: 2 x M25 x 1.5 cable glands (DQM-I Ex e, plastic)+1 x M25 x 1.5 plug.
Available cable outer diameter	Φ9~Φ16(mm);
Emergency data	
Emergency unit	Special emergency controller and battery pack, with protection against overcharge and overdischarge
Emergency power (W)	9W x 2 x 77%, 14W x 2 x 50%, 28W x 2 x 25% 20W x 70%, 40W x 35%, 60W x 23%
Emergency starting time	0.3s
Charging time	24h
Emergency lighting time	120min (180min is optional)

Selection table

Rated power(W)	Temperature classification							
	For non-emergency type				For emergency type			
	-40℃≤Ta≤+40℃		-40℃≤Ta≤+60℃		-40℃≤Ta≤+40℃		-40℃≤Ta≤+58℃	
	Gas	Dust	Gas	Dust	Gas	Dust	Gas	Dust
9 x 2, 14 x 2, 28 x 2,	T5	T80℃	T4	T80℃	T5	T80℃	T4	T80℃
20, 40, 60	T5	T80℃	T4	T80℃	T5	T80℃	T4	T80℃

Light Fittings for Fluorescent Lamp
BnY81-LED Series Explosion-proof Light Fittings (ec type)

Selection table

Type / Ordering code	Lamp power(W)	Weight (kg)	Type / Ordering code	Lamp power(W)	Weight (kg)	Type / Ordering code	Lamp power(W)	Weight (kg)
BnY81-LED 9 x 2X	9 x 2	3.60	BnY81-LED 14 x 2X	14 x 2	3.60	BnY81-LED 28 x 2X	28 x 2	6.00
BnY81-LED 9 x 2G	9 x 2	4.00	BnY81-LED 14 x 2G	14 x 2	4.00	BnY81-LED 28 x 2G	28 x 2	6.40
BnY81-LED 9 x 2D	9 x 2	3.50	BnY81-LED 14 x 2D	14 x 2	3.40	BnY81-LED 28 x 2D	28 x 2	5.90
BnY81-LED 9 x 2B	9 x 2	4.00	BnY81-LED 14 x 2B	14 x 2	4.00	BnY81-LED 28 x 2B	28 x 2	6.50
BnY81-LED 9 x 2L	9 x 2	3.80	BnY81-LED 14 x 2L	14 x 2	3.80	BnY81-LED 28 x 2L	28 x 2	6.30
BnY81-LED 9 x 2XJ	9 x 2	5.50	BnY81-LED 14 x 2XJ	14 x 2	5.50	BnY81-LED 28 x 2XJ	28 x 2	7.60
BnY81-LED 9 x 2GJ	9 x 2	5.50	BnY81-LED 14 x 2GJ	14 x 2	5.80	BnY81-LED 28 x 2GJ	28 x 2	8.00
BnY81-LED 9 x 2DJ	9 x 2	5.30	BnY81-LED 14 x 2DJ	14 x 2	5.30	BnY81-LED 28 x 2DJ	28 x 2	7.40
BnY81-LED 9 x 2BJ	9 x 2	5.90	BnY81-LED 14 x 2BJ	14 x 2	5.90	BnY81-LED 28 x 2BJ	28 x 2	8.00
BnY81-LED 9 x 2LJ	9 x 2	5.60	BnY81-LED 14 x 2LJ	14 x 2	5.60	BnY81-LED 28 x 2LJ	28 x 2	7.80
BnY81-LED 20X	20	3.50	BnY81-LED 40X	40	4.10	BnY81-LED 60X	60	6.20
BnY81-LED 20G	20	3.90	BnY81-LED 40G	40	4.50	BnY81-LED 60G	60	6.50
BnY81-LED 20D	20	3.30	BnY81-LED 40D	40	3.90	BnY81-LED 60D	60	6.00
BnY81-LED 20B	20	4.00	BnY81-LED 40B	40	4.50	BnY81-LED 60B	60	6.60
BnY81-LED 20L	20	3.70	BnY81-LED 40L	40	4.30	BnY81-LED 60L	60	6.30
BnY81-LED 20XJ	20	5.30	BnY81-LED 40XJ	40	7.80	BnY81-LED 60XJ	60	7.80
BnY81-LED 20GJ	20	5.70	BnY81-LED 40GJ	40	8.10	BnY81-LED 60GJ	60	8.10
BnY81-LED 20DJ	20	5.20	BnY81-LED 40DJ	40	7.60	BnY81-LED 60DJ	60	7.60
BnY81-LED 20BJ	20	5.80	BnY81-LED 40BJ	40	8.20	BnY81-LED 60BJ	60	8.20
BnY81-LED 20LJ	20	5.50	BnY81-LED 40LJ	40	7.90	BnY81-LED 60LJ	60	7.90

Note: 1. Products above include all the mounting accessories listed in Mounting Accessories & Spare Parts Table (see P2/49).

Photometric data

BnY81-LED 9x2□

Lamp power (W)	9 x 2
Rated luminous flux	2300lm
Wattage	17.5W

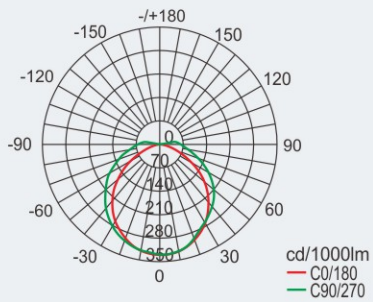

BnY81-LED 14x2□

Lamp power (W)	14 x 2
Rated luminous flux	3100lm
Wattage	28.5W

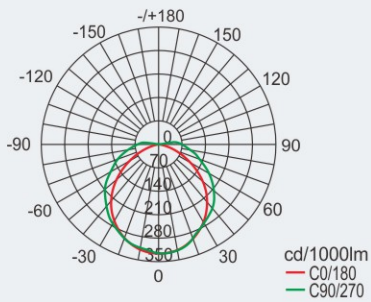

BnY81-LED 28x2□

Lamp power (W)	28 x 2
Rated luminous flux	6600lm
Wattage	58W

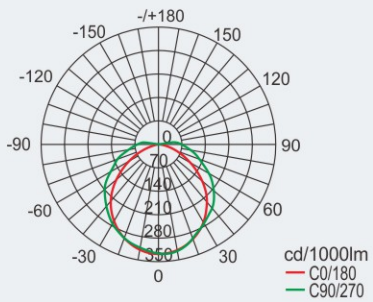

BnY81-LED 20□

Lamp power (W)	20
Rated luminous flux	2900lm
Wattage	22W

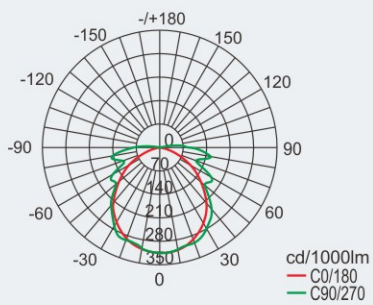

BnY81-LED 40□

Lamp power (W)	40
Rated luminous flux	5200lm
Wattage	43W

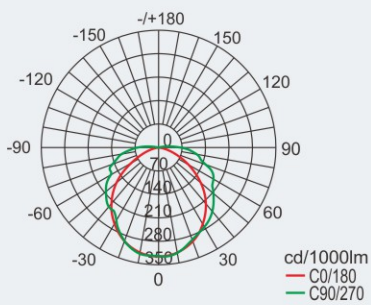

BnY81-LED 60□

Lamp power (W)	60
Rated luminous flux	7000lm
Wattage	61W

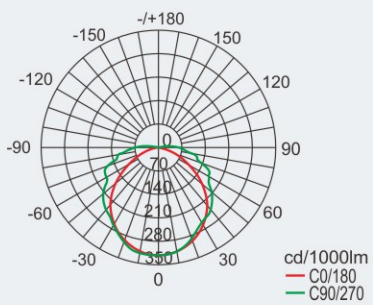

We can provide lighting design and data by professional lighting software DIALUX based upon simulated site situation on request.

Mounting type (all dimensions in mm) - subject to alteration

Installation reference

D: pendant chain type

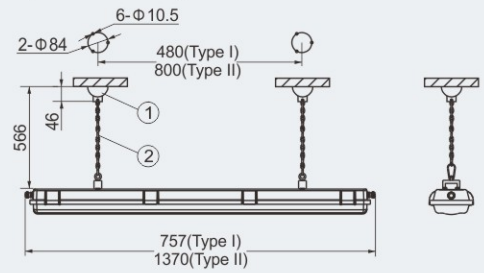

G: pendant pole type

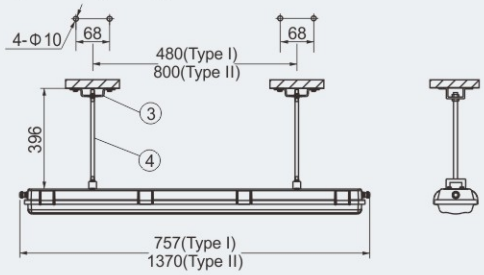

X:ceiling type

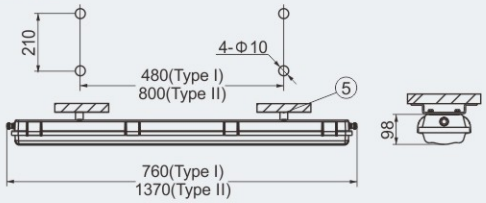

B:wall type

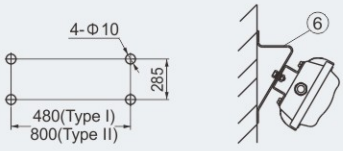

L: pole type (the pole is provided by user)

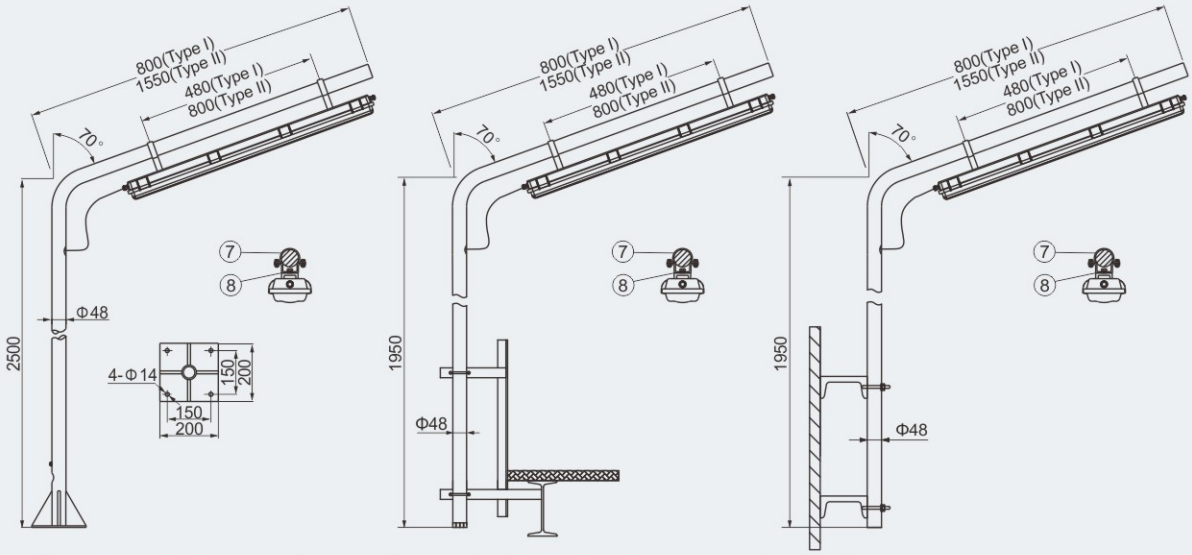

Suitable for ground pole type | Suitable for fence pole type | Suitable for wall pole type

Mounting Accessories & Spare Parts Table

Supplied according to the mounting type

Mounting type	Accessories			Ordering code	Weight (kg)
	Name	Qty	Illustration		
D: pendant chain type	①.Sucker	2	See P2/6	5136017	0.15
	②.Chain	2	Length: 450mm	5136016	0.08
G: pendant pole type	③.Mounting bracket	2	Stainless steel, see P2/6	51S01G1	0.04
	④.M8 Screw	2	Stainless steel, length: 350mm	51S01G2	0.12
X: ceiling type	⑤.Mounting bracket	2	Stainless steel, see P2/7	5136015	0.20
B: wall type	⑥.Wall bracket	2	Stainless steel, welded sheet steel	5236B02	0.25
L: pole type	⑦.G1 1/2" Pipe clamp	2	Stainless steel, see P2/7	5136014	0.04
	⑧.Mounting bracket	2	Stainless steel, see P2/7	5136012	0.04

Note: Accessories not in the table shall be supplied by user.

Light Fittings for Fluorescent Lamp
HRY51-G/C LED Series Explosion-proof Light Fittings


With LED tubes

With LED SMT

- Explosion protection to
  -CENELEC
  -IEC
  -NEC
- Can be used in
  Zone1 and Zone 2
  Zone 21 and Zone 22
  Class I, Zone 1 and Zone 2
  Class I, Division 2, Groups A, B, C, D
- Clear polycarbonate transparent cover, high light transmittance, resistance to high energy impact and thermal fusion.
- Enclosure is formed of stainless steel.
- Built-in electronic ballast, power factor ≥0.95.
- LED driver, wide voltage input, CC-CV (constant current - constant voltage) output, power factor ≥0.95.
- Emergency functions are available on request.

Catalogue number logic

With LED tubes:

HRY51-G/C LED □ x □ □ □

- J: Emergency lighting(optional)
- Mounting
  - x: ceiling type
  - g: pendant pole type
  - b: wall type
  - W: bend pole type
  - f: flange type
  - h: fence type
  - L: pendant chain type
- Lamp number
- Lamp power (W)
- Explosion-proof light fittings for fluorescent lamp

With LED SMT :

HRY51-G/C LED □ □ □

- J: Emergency lighting(optional)
- Mounting
  - x: ceiling type
  - g: pendant pole type
  - b: wall type
  - W: bend pole type
  - f: flange type
  - h: fence type
  - L: pendant chain type
- Lamp power (W)
- Explosion-proof light fittings for fluorescent lamp

Zones 1&2; 21&22

Technical data

Explosion-proof light fittings with LED tubes HRY51-G/C LED □×□□□

Explosion protection	
Global (IECEx)	IECEx CML 20. 0167X
Gas and dust	Ex db eb IIC T□ Gb[1)] Ex db eb q IIC T□ Gb[1)] Ex tb IIIC T80℃ Db IP66/IP67
Europe (ATEX)	CML 20 ATEX 1296X
Gas and dust	Ⓔx II 2 G Ex db eb IIC T□ Gb[1)] Ⓔx II 2 G Ex db eb q IIC T□ Gb[1)] Ⓔx II 2 D Ex tb IIIC T80℃ Db IP66/IP67
	[1)] See ambient temerature
Certificates	IECEx; ATEX; CU-TR; INMETRO
Conformity to standards	EN 60079-0, EN 60079-1, EN 60079-5, EN 60079-7, EN 60079-31 IEC 60079-0, IEC 60079-1, IEC 60079-5, IEC 60079-7, IEC 60079-31
Material	
Enclosure	Stainless steel
Diffuser	Polycarbonate, stands 4J impact
Ballast	Electronic ballast, power factor ≥0.95
LED driver	Wide voltage input, CC-CV (constant current - constant voltage) output, power factor ≥0.95
Exposed fastener	Stainless steel
Lamp	
Lamp specification	LED tubes (supplied with the light fittings)
Lamp power (W)	9Wx2, 18Wx2, 14Wx2, 28Wx2
Colour rendering index (Ra)	⩾80
LED Colour temperature (CCT)	5000K Note: nature white is available in general. Warm white or cool white is optional, please specify when ordering.
Rated voltage	9Wx2, 18Wx2: 170~264V AC 50/60Hz 14Wx2, 28Wx2: 100~277V AC 50/60Hz, 200~250V DC
Degree of protection	IP66/IP67

Ambient temperature

Rated Power (W)	Ex-mark	Ambient temperature
9×2□ 18×2□	Ⓔx II 2 G Ex db eb IIC T6 Gb Ⓔx II 2 D Ex tb IIIC T80℃ Db	-40℃~+57℃
	Ⓔx II 2 G Ex db eb IIC T5 Gb Ⓔx II 2 D Ex tb IIIC T80℃ Db	-40℃~+58℃
14×2□ 28×2□	Ⓔx II 2 G Ex db eb q IIC T6 Gb Ⓔx II 2 D Ex tb IIIC T80℃ Db	-40℃~+53℃
	Ⓔx II 2 G Ex db eb q IIC T5 Gb Ⓔx II 2 D Ex tb IIIC T80℃ Db	-40℃~+58℃
14×2□J 28×2□J	Ⓔx II 2 G Ex db eb q IIC T6 Gb Ⓔx II 2 D Ex tb IIIC T80℃ Db	-40℃~+48℃
	Ⓔx II 2 G Ex db eb q IIC T5 Gb Ⓔx II 2 D Ex tb IIIC T80℃ Db	-40℃~+53℃

Terminal	3 x 1.5~4mm² (L+N+PE)
Cable entries	4 x Φ21: 4 x M20 x 1.5 cable glands (DQM-I Ex e, plastic)
Available cable outer diameter	Φ9~Φ16 (mm)
Emergency data	
Emergency unit	Special emergency controller and battery pile, with protection against over-charge and overdischarge
Emergency power (W)	14W x 30%, 28W x 30%
Emergency starting time	0.3s
Charging time	24h
Emergency lighting time	120min (180min is optional)

Light Fittings for Fluorescent Lamp
HRY51-G/C LED Series Explosion-proof Light Fittings

Technical data

Explosion-proof light fittings with LED SMT HRY51-G/C LED □□□

Explosion protection	
Global (IECEx)	IECEx (applied for)
Gas and dust	Ex db eb mb IIC T6/T5/T4 Gb Ex tb IIIC T80℃/T95℃/T130℃ Db
Europe (ATEX)	ATEX (applied for)
Gas and dust	Ⓔx II 2 G Ex db eb mb IIC T6/T5/T4 Gb Ⓔx II 2 G Ex tb IIIC T80℃/T95℃/T130℃ Db
Certificates	IECEx; ATEX
Conformity to standards	EN 60079-0, EN 60079-1, EN 60079-7, EN 60079-18, EN 60079-31 IEC 60079-0, IEC 60079-1, IEC 60079-7, IEC 60079-18, IEC 60079-31
Material	
Enclosure	Stainless steel
Diffuser	Polycarbonate, stands 4J impact
Ballast	Electronic ballast, power factor ≥0.95
LED driver	Wide voltage input, CC-CV (constant current - constant voltage) output, power factor ≥0.95
Exposed fastener	Stainless steel
Lamp	
Lamp specification	LED SMT (supplied with the light fittings)
Lamp power (W)	20W, 40W, 60W, 80W
Colour rendering index (Ra)	⩾80
LED Colour temperature (CCT)	5000K Note: nature white is available in general. Warm white or cool white is optional, please specify when ordering.
Rated voltage	100-277V AC 50/60Hz 130~250V DC
Degree of protection	IP66/IP67
Ambient temperature	-40℃~+60℃(+40℃)
Terminal	3 x 1.5~4mm^2 (L+N+PE)
Cable entries	4 x Φ21: 4 x M20 x 1.5 cable glands (DQM-I Ex e, plastic)
Available cable outer diameter	Φ9~Φ16 (mm)
Emergency data	
Emergency unit	Special emergency controller and battery pile, with protection against over-charge and overdischarge
Emergency power (W)	20W x 70%, 40W x 35%, 60W x 23%
Emergency starting time	0.3s
Charging time	24h
Emergency lighting time	90min (180min is optional)

Selection table

Rated power(W)	Temperature classification			
	-40℃⩽Ta⩽+40℃		-40℃⩽Ta⩽+60℃	
	Gas	Dust	Gas	Dust
20	T6	T80℃	T5	T95℃
40	T5	T95℃	T4	T130℃
60, 80	/	/	T4	T130℃

Light Fittings for Fluorescent Lamp
HRY51-G/C LED Series Explosion-proof Light Fittings

Selection table for explosion-proof light fittings with LED tubes

Type / Ordering code	Lamp power(W)	Weight (kg)	Type / Ordering code	Lamp power(W)	Weight (kg)	Type / Ordering code	Lamp power(W)	Weight (kg)
HRY51-G/C LED 9 x 2x	9×2	7.20	HRY51-G/C LED 14 x 2x	14×2	8.50	HRY51-G/C LED 14 x 2xJ	14×2	8.80
HRY51-G/C LED 9 x 2g	9×2	7.35	HRY51-G/C LED 14 x 2g	14×2	8.65	HRY51-G/C LED 14 x 2gJ	14×2	8.95
HRY51-G/C LED 9 x 2b	9×2	7.55	HRY51-G/C LED 14 x 2b	14×2	8.85	HRY51-G/C LED 14 x 2bJ	14×2	9.15
HRY51-G/C LED 9 x 2W	9×2	7.20	HRY51-G/C LED 14 x 2W	14×2	8.50	HRY51-G/C LED 14 x 2WJ	14×2	8.80
HRY51-G/C LED 9 x 2h	9×2	7.20	HRY51-G/C LED 14 x 2h	14×2	8.50	HRY51-G/C LED 14 x 2hJ	14×2	8.80
HRY51-G/C LED 9 x 2f	9×2	7.20	HRY51-G/C LED 14 x 2f	14×2	8.50	HRY51-G/C LED 14 x 2fJ	14×2	8.80
HRY51-G/C LED 9 x 2L	9×2	7.50	HRY51-G/C LED 14 x 2L	14×2	8.80	HRY51-G/C LED 14 x 2LJ	14×2	9.10
HRY51-G/C LED 18 x 2x	18×2	11.20	HRY51-G/C LED 28 x 2x	28×2	12.50	HRY51-G/C LED 28 x 2xJ	28×2	12.80
HRY51-G/C LED 18 x 2g	18×2	11.35	HRY51-G/C LED 28 x 2g	28×2	12.65	HRY51-G/C LED 28 x 2gJ	28×2	12.95
HRY51-G/C LED 18x 2b	18×2	11.55	HRY51-G/C LED 28x 2b	28×2	12.85	HRY51-G/C LED 28x 2bJ	28×2	13.15
HRY51-G/C LED 18 x 2W	18×2	11.20	HRY51-G/C LED 28 x 2W	28×2	12.50	HRY51-G/C LED 28 x 2WJ	28×2	12.80
HRY51-G/C LED 18 x 2h	18×2	11.20	HRY51-G/C LED 28 x 2h	28×2	12.50	HRY51-G/C LED 28 x 2hJ	28×2	12.80
HRY51-G/C LED 18 x 2f	18×2	11.20	HRY51-G/C LED 28 x 2f	28×2	12.50	HRY51-G/C LED 28 x 2fJ	28×2	12.80
HRY51-G/C LED 18 x 2L	18×2	11.50	HRY51-G/C LED 28 x 2L	28×2	12.80	HRY51-G/C LED 28 x 2LJ	28×2	13.10

Note: 1. Products above include all the mounting accessories listed in Mounting Accessories & Spare Parts Table (see P2/55).

Selection table for explosion-proof light fittings with SMD LED

Type / Ordering code	Lamp power(W)	Weight (kg)	Type / Ordering code	Lamp power(W)	Weight (kg)	Type / Ordering code	Lamp power(W)	Weight (kg)
HRY51-G/C LED 20x	20	4.55	HRY51-G/C LED 40x	40	7.10	HRY51-G/C LED 60x	60	7.40
HRY51-G/C LED 20g	20	4.70	HRY51-G/C LED 40g	40	7.30	HRY51-G/C LED 60g	60	7.60
HRY51-G/C LED 20b	20	4.90	HRY51-G/C LED 40b	40	7.50	HRY51-G/C LED 60b	60	7.80
HRY51-G/C LED 20W	20	4.55	HRY51-G/C LED 40W	40	7.10	HRY51-G/C LED 60W	60	7.40
HRY51-G/C LED 20h	20	4.55	HRY51-G/C LED 40h	40	7.10	HRY51-G/C LED 60h	60	7.40
HRY51-G/C LED 20f	20	4.55	HRY51-G/C LED 40f	40	7.10	HRY51-G/C LED 60f	60	7.40
HRY51-G/C LED 20L	20	4.85	HRY51-G/C LED 40L	40	7.50	HRY51-G/C LED 60LJ	60	7.70
HRY51-G/C LED 20xJ	20	5.90	HRY51-G/C LED 40xJ	40	8.40	HRY51-G/C LED 60xJ	60	8.40
HRY51-G/C LED 20gJ	20	6.00	HRY51-G/C LED 40gJ	40	8.60	HRY51-G/C LED 60gJ	60	8.50
HRY51-G/C LED 20bJ	20	6.20	HRY51-G/C LED 40bJ	40	8.80	HRY51-G/C LED 60bJ	60	8.70
HRY51-G/C LED 20WJ	20	5.90	HRY51-G/C LED 40WJ	40	8.50	HRY51-G/C LED 60WJ	60	8.40
HRY51-G/C LED 20hJ	20	5.90	HRY51-G/C LED 40hJ	40	8.50	HRY51-G/C LED 60hJ	60	8.40
HRY51-G/C LED 20fJ	20	5.90	HRY51-G/C LED 40fJ	40	8.50	HRY51-G/C LED 60fJ	60	8.40
HRY51-G/C LED 20LJ	20	6.20	HRY51-G/C LED 40LJ	40	8.50	HRY51-G/C LED 60LJ	60	8.70
HRY51-G/C LED 80x	80	8.10						
HRY51-G/C LED 80g	80	8.20						
HRY51-G/C LED 80b	80	8.40						
HRY51-G/C LED 80W	80	8.10						
HRY51-G/C LED 80h	80	8.10						
HRY51-G/C LED 80f	80	8.10						
HRY51-G/C LED 80L	80	8.40						

Note: 1. Products above include all the mounting accessories listed in Mounting Accessories & Spare Parts Table (see P2/55).

Light Fittings for Fluorescent Lamp
HRY51-G/C LED Series Explosion-proof Light Fittings

Photometric data Note: LED luminous flux is from the standard product of which colour temperature is 5000K

HRY51-G/C LED □ x □□□

Lamp power (W)	Luminous flux	Wattage
9 x 2	1850lm	18.5W
14 x 2	2805lm	28W

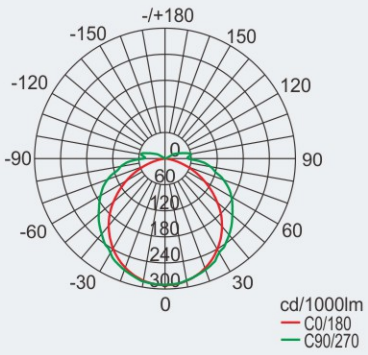

HRY51-G/C LED □ x □□□

Lamp power (W)	Luminous flux	Wattage
18 x 2	3835lm	36.5W
28 x 2	5770lm	56W

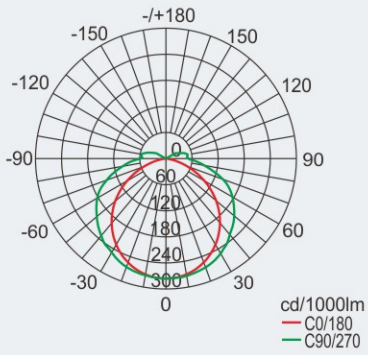

HRY51-G/C LED 20□□

Lamp power	20W
Luminous flux	2500lm
Wattage	22W

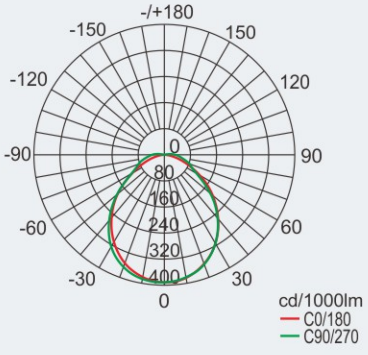

HRY51-G/C LED 40□□

Lamp power	40W
Luminous flux	5100lm
Wattage	43W

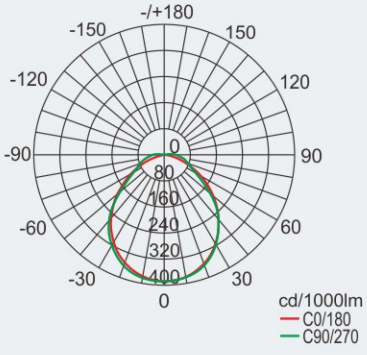

HRY51-G/C LED □□□

Lamp power	60W	80W
Luminous flux	7000lm	9900lm
Wattage	58W	86W

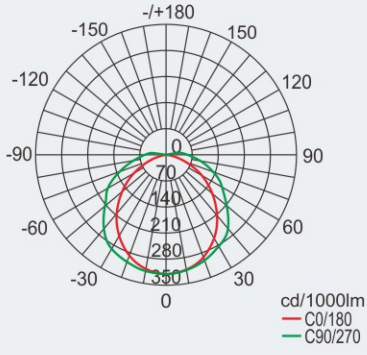

We can provide lighting design and data by professional lighting software DIALUX based upon simulated site situation on request.

Dimension drawings (all dimensions in mm) - subject to alteration

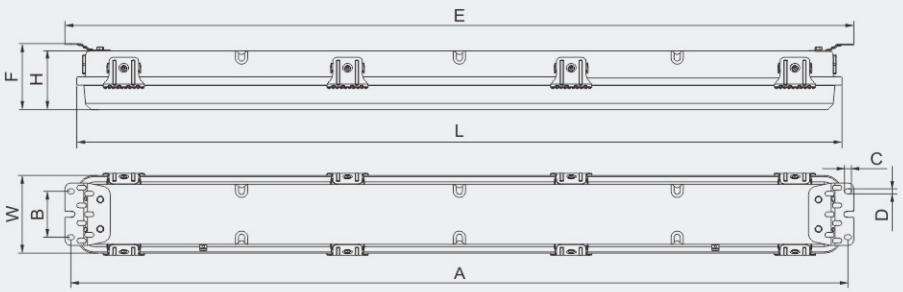

Enclosure type	Rated power (W)	L	W	H	A	B	C	D	E	F
Type I	9×2, 14×2, 20	692	150	100	705	78	12	8.5	732	113
Type II	18×2, 28×2, 40, 60, 80	1300	132	100	1320	78	12	8.5	1340	113

Mounting type (all dimensions in mm) - subject to alteration

Installation reference

L: pendant chain type

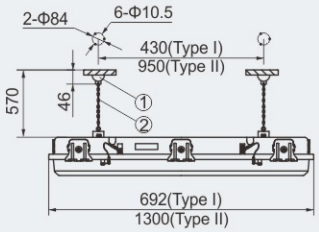

g: pendant pole type

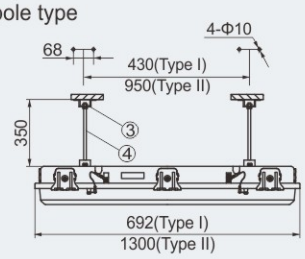

x: ceiling type

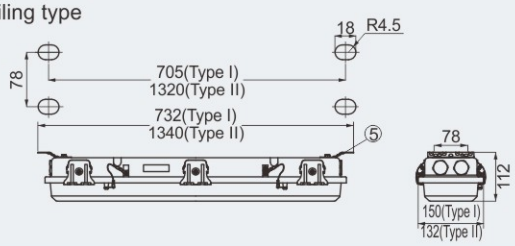

b: wall type

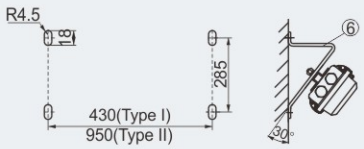

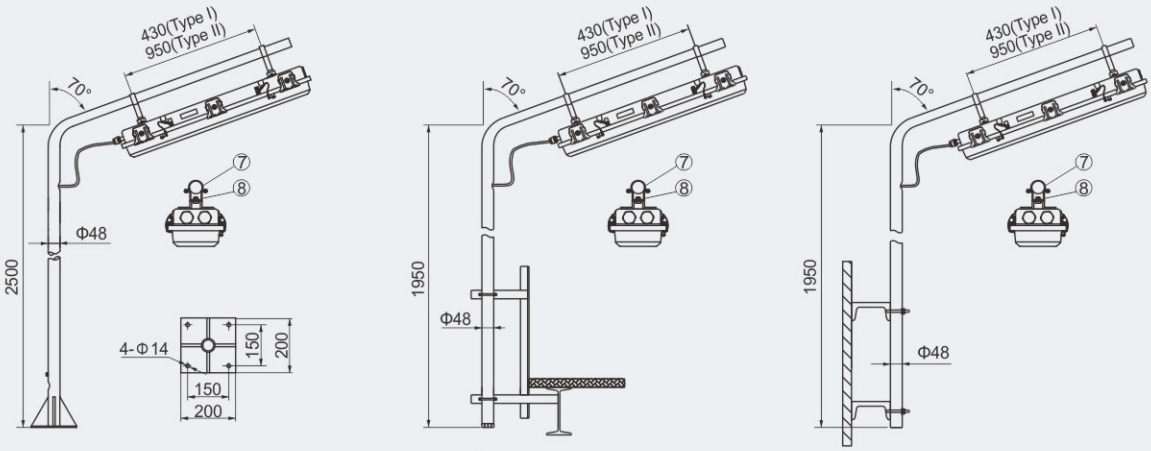

f: flange type

h: fence type

W: bend pole type

Mounting Accessories & Spare Parts Table

Supplied according to the mounting type

Mounting type	Accessories			Ordering code	Weight (kg)
	Name	Qty	Illustration		
L: pendant chain type	①.Sucker	2	See P2/6	5136017	0.15
	②.Chain	2	Length: 450mm	5136016	0.08
g: pendant pole type	③.Mounting bracket	2	Stainless steel, see P2/6	51S01G1	0.04
	④.M8 Screw	2	Stainless steel, length: 350mm	51S01G2	0.12
x: ceiling type	⑤.Mounting bracket	2	Stainless steel	5136015	0.20
b: wall type	⑥.Wall bracket	2	Stainless steel, welded sheet steel	5236B02	0.25
f: flange type	⑦.G1 1/2" Pipe clamp	2	Stainless steel, see P2/7	5136014	0.04
	⑧.Mounting bracket	2	Stainless steel, see P2/7	5136012	0.04
h: fence type	⑦.G1 1/2" Pipe clamp	2	Stainless steel, see P2/7	5136014	0.04
	⑧.Mounting bracket	2	Stainless steel, see P2/7	5136012	0.04
W: bend pole type	⑦.G1 1/2" Pipe clamp	2	Stainless steel, see P2/7	5136014	0.04
	⑧.Mounting bracket	2	Stainless steel, see P2/7	5136012	0.04

Note: Accessories not in the table shall be supplied by user.

LED Light Fittings
HRD91-LED Series Explosion-proof LED Lightings



- Explosion protection to
  -CENELEC
  -IEC
  -NEC
- Can be used in
  Zone 1 and Zone 2
  Zone 21 and Zone 22
  Class I, Zone 1 and Zone 2
  Class I, Division 1, Groups A, B, C, D
- Two enclosure types: 50, 100
- Applicable lamp and power (max.100W)
  LED : 30W, 50W, 70W, 100W
- Isolated LED lamp compartment, CC-CV (constant current - constant voltage) power controller compartment and terminal compartment; Wind-convection heat dissipation structure.
- Low-maintenance costs due to long service life, which is up to 100,000 operating hours.

Catalogue number logic

HRD91 - LED □-□ □

- Mounting
  - D: hook type
  - G: pendant pole type
  - B: wall type
  - X: ceiling type
  - K: bracket type
  - L: pole type
  - H: fence type
- Lamp power (W)
- Enclosure type: 50, 100
- Explosion-proof LED lightings

Selection table

Type / Ordering code	Lamp power(W)
HRD91-LED50-□ □	30, 50
HRD91-LED100-□ □	70, 100

Note: 1. Products above include all the mounting accessories listed in Mounting Accessories & Spare Parts Table (see P2/61).
2. The product is supplied according to “Type/Ordering code” in the table with mounting accessories.

Zones 1&2; 21&22

Technical data

Explosion-proof LED lightings HRD91-LED□-□□

Explosion protection	
Global (IECEx)	IECEx NEP 18.0022X
Gas and dust	Ex db IIC T6/T5/T4 Gb
	Ex tb IIIC T80℃/T85℃/T95℃/T100℃ Db
Europe (ATEX)	TÜV CY 19 ATEX 0206175X
Gas and dust	Ⓔx II 2 G Ex db IIC T6/T5/T4 Gb
	Ⓔx II 2 D Ex tb IIIC T80℃/T85℃/T95℃/T100℃ Db
Certificates	IECEx; ATEX; CU-TR
Conformity to standards	EN 60079-0, EN 60079-1, EN 60079-31
	IEC 60079-0, IEC 60079-1, IEC 60079-31
Material	
Enclosure	Copper-free aluminium alloy, powder coated surface, yellow (RAL1021)
Transparent cover	Toughened glass, stands 4J impact
Exposed fastener	Stainless steel
LED driver	Wide voltage input, CC-CV (constant current - constant voltage) output, power factor ≥0.95, with function of distributed current, constant current, surge-proof and anti-electromagnetic interference, and protection against overcurrent, open circuit, and short circuit
Lamp	
Lamp specification	LED
Lamp power (W)	30W, 50W, 70W, 100W
Colour rendering index (Ra)	⩾80
Colour temperature (CCT)	5700K
	Note: cool white is available in general. Warm white or nature white is optional, please specify when ordering.
Rated voltage	100~277V AC 50/60Hz, 220~240V AC 50/60Hz
	100~250V DC
Earthing protection	M5 (internal & external earth bolts)
Degree of protection	IP66
Ambient temperature	30W, 50W: T6/T80℃ for Tamb: -20℃~+43℃; T5/T95℃ for Tamb: -20℃~+58℃
	70W, 100W: T5/T85℃ for Tamb: -20℃~+43℃; T4/T100℃ for Tamb: -20℃~+58℃
Terminal	3 x 1.5~4mm^2 (L+N+PE)
Mounting	Ceiling type, pole type, pendant pole type, wall type, bracket type, hook type, fence type
Cable entries	M25 x 1.5
Cable gland	See Mounting Accessories & Spare Parts Table
Available cable outer diameter	Φ10~Φ14(mm)

Dimension drawings (all dimensions in mm) - subject to alteration

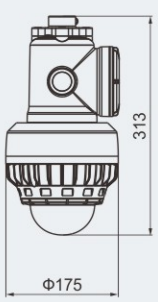

HRD91-LED50

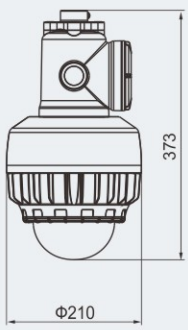

HRD91-LED100

LED Light Fittings
HRD91-LED Series Explosion-proof LED Lightings

Photometric data
Note: LED luminous flux is from the standard product of which colour temperature is 5700K





HRD91-LED50-30-□

Lamp power (W)	Luminous flux	Wattage
30	3600lm	30W

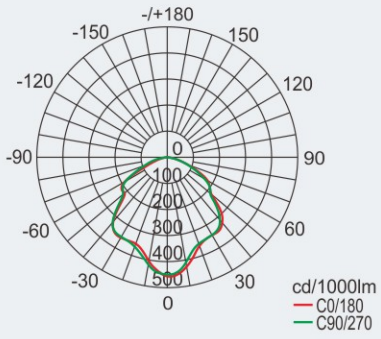

HRD91-LED100-70-□

Lamp power (W)	Luminous flux	Wattage
70	8400lm	70W

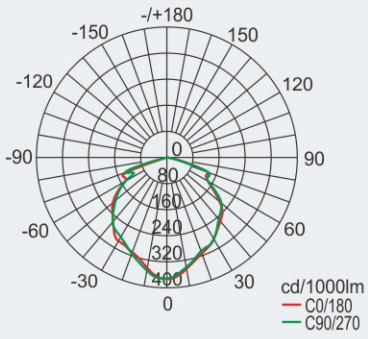

HRD91-LED50-50-□

Lamp power (W)	Luminous flux	Wattage
50	6100lm	50W

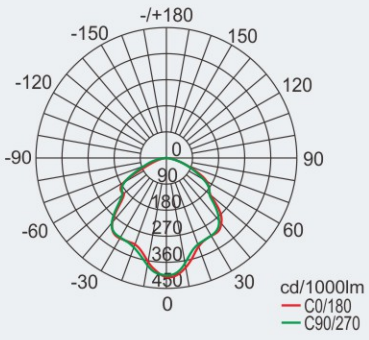

HRD91-LED100-100-□

Lamp power (W)	Luminous flux	Wattage
100	11200lm	100W

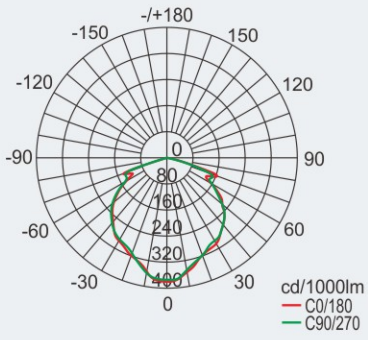

We can provide lighting design and data by professional lighting software DIALUX based upon simulated site situation on request.

Mounting type (all dimensions in mm) - subject to alteration

G: pendant pole type

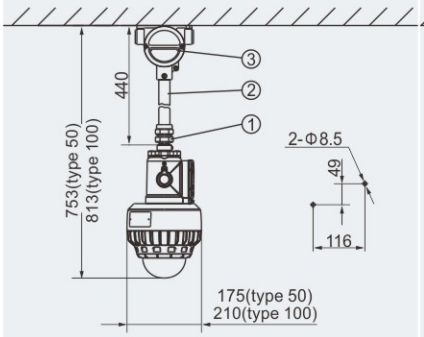

Weight: 3.75kg (type 50)
5.80kg (type 100)
Accessories supplied with the light fittings:
①.BGJ-III Explosion-proof connector G3/4"(M)/ M25×1.5(F), Stainless steel.
②.Straight pipe (M25 x 1.5), length: 300mm.
③.BHD51-F(Ex d IIC, copper-free aluminium alloy), see P3/4.

D: hook type

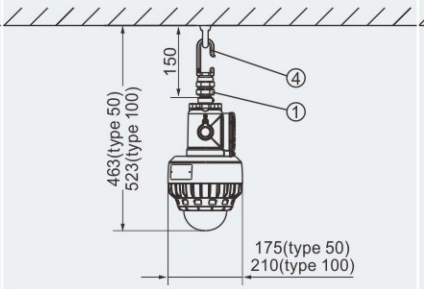

Weight: 2.75kg (type 50)
4.80kg (type 100)
Accessories supplied with the light fittings:
①.BGJ-III explosion-proof connector G3/4" (M)/M25 x 1.5(F), Stainless steel.
④.Hook (Stainless steel).

X: ceiling type

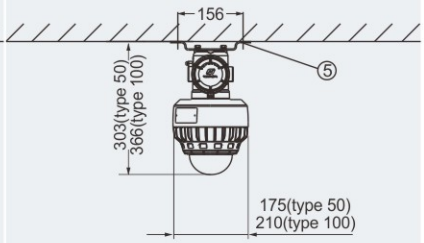

Weight: 3.30kg (type 50)
5.40kg (type 100)
Accessories supplied with the light fittings:
⑤.Mounting feet

B: wall type

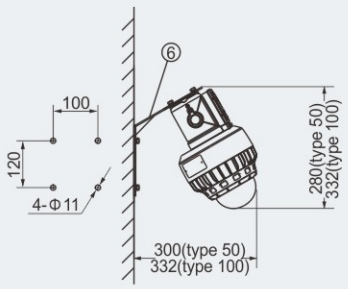

Weight: 3.30kg (type 50)
5.40kg (type 100)
Accessories supplied with the light fittings:
⑥.Wall bracket

K: bracket type

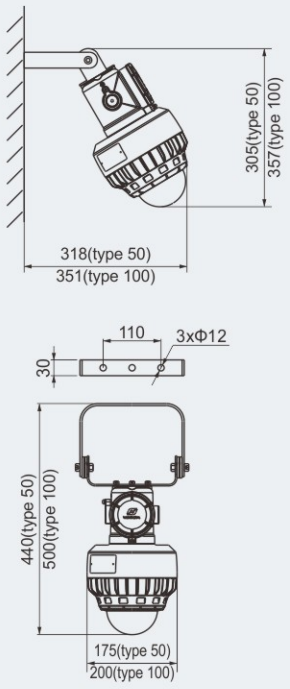

Weight: 4.00kg (type 50)
6.20kg (type 100)
Accessories supplied with the light fittings:
⑦. Mounting bracket, sheet steel, powder coated.

L: pole type

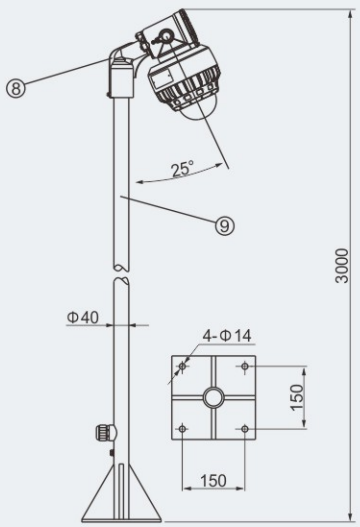

Weight: 2.75kg (type 50)
4.80kg (type 100)
Accessories supplied with the light fittings:
⑧. Pole type connector
⑨. Pole (shall be provided by user)

H: fence type

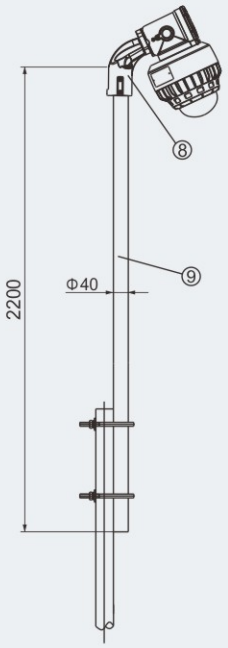

Weight: 2.75kg (type 50)
4.80kg (type 100)
Accessories supplied with the light fittings:
⑧. Pole type connector
⑨. Pole (shall be provided by user)

LED Light Fittings
HRD95 Series Explosion-proof LED Lightings



- Explosion protection to
  -CENELEC
  -IEC
  -NEC
- Can be used in
  Zone 1 and Zone 2
  Zone 21 and Zone 22
  Class I, Zone 1 and Zone 2
  Class I, Division 2, Groups A, B, C, D
- Three enclosure types: 90, 160, 240
- Applicable lamp and power (max.240W)
  LED: 60W, 90W, 120W, 160W, 200W, 240W
- Isolated LED lamp compartment, CC-CV (constant current - constant voltage) power controller compartment and terminal compartment; Wind-convection heat dissipation structure.
- International brand white light LED, reasonable arrangement of multi LED, high lighting efficiency and long service life.
- Two types of light distribution: spotlight and floodlight, which can be selected on request.
- Low-maintenance costs due to long service life, which is up to 100,000 operating hours.

Catalogue number logic

HRD95 - □-□ □

- Mounting
  - K: bracket type
  - G: pendant pole type
  - D: hook type
  - L: pole type
  - B: wall type
  - X: ceiling type
- Lamp power (W)
- Enclosure type: 90, 160, 240
- Explosion-proof LED lightings

Selection table

Type / Ordering code	Lamp power(W)	Weight (kg)	Type / Ordering code	Lamp power(W)	Weight (kg)	Type / Ordering code	Lamp power(W)	Weight (kg)
HRD95-90-60K	60	9.80	HRD95-90-60D	60	9.50	HRD95-160-120B	120	13.50
HRD95-90-90K	90	9.80	HRD95-90-90D	90	9.50	HRD95-160-160B	160	13.50
HRD95-160-120K	120	12.70	HRD95-160-120D	120	11.75	HRD95-240-200B	200	26.60
HRD95-160-160K	160	12.70	HRD95-160-160D	160	11.75	HRD95-240-240B	240	26.60
HRD95-240-200K	200	27.50	HRD95-90-60L	60	9.30	HRD95-90-60X	60	9.20
HRD95-240-240K	240	27.50	HRD95-90-90L	90	9.30	HRD95-90-90X	90	9.20
HRD95-90-60G	60	10.75	HRD95-160-120L	120	12.00	HRD95-160-120X	120	11.75
HRD95-90-90G	90	10.75	HRD95-160-160L	160	12.00	HRD95-160-160X	160	11.75
HRD95-160-120G	120	13.05	HRD95-90-60B	60	11.00	HRD95-240-200X	200	24.80
HRD95-160-160G	160	13.05	HRD95-90-90B	90	11.00	HRD95-240-240X	240	24.80

Note: 1. The product is supplied according to “Type/Ordering code” in the table with mounting accessories.
2. Two types of light distribution: spotlight and floodlight. The light fittings are supplied without lens. Lighting distribution is of floodlight. If required, please specify when ordering.

Zones 1&2; 21&22

Technical data

Explosion-proof LED lightings HRD95-90-□□

Explosion protection	
Global (IECEx)	IECEx CNEX 18.0024 X
Gas and dust	Ex db op is IIC T□[1] Gb Ex tb op is IIIC T□[1] Db IP66
Europe (ATEX)	CNEX 18 ATEX 0020X
Gas and dust	Ⓔx II 2 G Ex db op is IIC T□[1] Gb Ⓔx II 2 D Ex tb op is IIIC T□[1] Db IP66
	[1] See Selection Table
Certificates	IECEx; ATEX; CU-TR
Conformity to standards	EN 60079-0, EN 60079-1, EN 60079-28, EN 60079-31 IEC 60079-0, IEC 60079-1, IEC 60079-28, IEC 60079-31
Material	
Enclosure	Copper-free aluminium alloy, powder coated surface, yellow (RAL1021)
Glass cover	Toughened glass, stands 4J impact
Exposed fastener	Stainless steel
LED driver	Wide voltage input, CC-CV (constant current - constant voltage) output, power factor ≥0.95, with function of distributed current, constant current, surge-proof and anti-electromagnetic interference, and protection against overcurrent, open circuit, and short circuit
Lamp	
Lamp specification	LED module, Multiple LED
Lamp power (W)	60W, 90W
Colour rendering index (Ra)	⩾80
Colour temperature (CCT)	5700K Note: cool white is available in general. Warm white or nature white is optional, please specify when ordering.
Rated voltage	100~277V AC 50/60Hz, 130~250V DC
Earthing protection	M5 (internal & external earth bolts)
Degree of protection	IP66
Ambient temperature	-40℃~+55℃(+40℃)
Terminal	3 x 1.5~4mm^2 (L+N+PE)
Mounting	bracket type, hook type, pole type, pendant pole type, wall type, ceiling type
Cable entries	1 x M25 x 1.5 (hook type, pole type, pendant pole type) 2 x M25 x 1.5 (bracket type) 4 x M25 x 1.5 (wall type, ceiling type)
Cable gland	DQM-II (Ex d) or DQM-III (Ex d) is recommended. Please see P7/22~31

Selection table

Rated power(W)	Temperature classification			
	-40℃⩽Ta⩽+40℃		-40℃⩽Ta⩽+55℃	
	Gas	Dust	Gas	Dust
60	71℃ (T6)	71℃	86℃ (T5)	86℃
90	82℃ (T5)	82℃	97℃ (T4)	97℃

Dimension drawings (all dimensions in mm) - subject to alteration

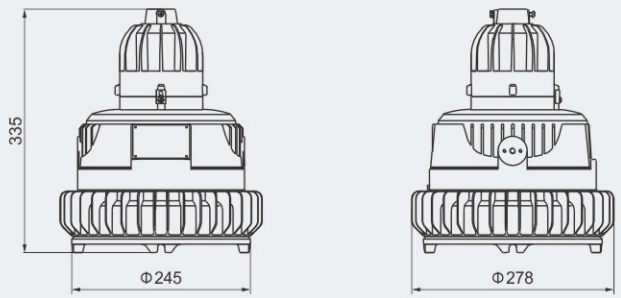

LED Light Fittings
HRD95 Series Explosion-proof LED Lightings

Technical data

Explosion-proof LED lightings HRD95-160-□□

Explosion protection	
Global (IECEx)	IECEx CNEX 18.0024 X
Gas and dust	Ex db op is IIC T□[1] Gb Ex tb op is IIIC T□[1] Db IP66
Europe (ATEX)	CNEX 18 ATEX 0020X
Gas and dust	Ⓔx II 2 G Ex db op is IIC T□[1] Gb Ⓔx II 2 D Ex tb op is IIIC T□[1] Db IP66
	[1] See Selection Table
Certificates	IECEx; ATEX; CU-TR
Conformity to standards	EN 60079-0, EN 60079-1, EN 60079-28, EN 60079-31 IEC 60079-0, IEC 60079-1, IEC 60079-28, IEC 60079-31
Material	
Enclosure	Copper-free aluminium alloy, powder coated surface, yellow (RAL1021)
Glass cover	Toughened glass, stands 4J impact
Exposed fastener	Stainless steel
LED driver	Wide voltage input, CC-CV (constant current - constant voltage) output, power factor ≥0.95, with function of distributed current, constant current, surge-proof and anti-electromagnetic interference, and protection against overcurrent, open circuit, and short circuit
Lamp	
Lamp specification	LED module, Multiple LED
Lamp power (W)	120W, 160W
Colour rendering index (Ra)	⩾80
Colour temperature (CCT)	5700K Note: cool white is available in general. Warm white or nature white is optional, please specify when ordering.
Rated voltage	100~277V AC 50/60Hz, 130~250V DC
Earthing protection	M5 (internal & external earth bolts)
Degree of protection	IP66
Ambient temperature	-40℃~+55℃(+40℃)
Terminal	3 x 1.5~4mm^2 (L+N+PE)
Mounting	bracket type, hook type, pole type, pendant pole type, wall type, ceiling type
Cable entries	1 x M25 x 1.5 (hook type, pole type, pendant pole type) 2 x M25 x 1.5 (bracket type) 4 x M25 x 1.5 (wall type, ceiling type)
Cable gland	DQM-II (Ex d) or DQM-III (Ex d) is recommended. Please see P7/22~31

Selection table

Rated power(W)	Temperature classification			
	-40℃⩽Ta⩽+40℃		-40℃⩽Ta⩽+55℃	
	Gas	Dust	Gas	Dust
120	76℃ (T6)	76℃	91℃ (T5)	91℃
160	93℃ (T4)	93℃	108℃ (T4)	108℃

Dimension drawings (all dimensions in mm) - subject to alteration

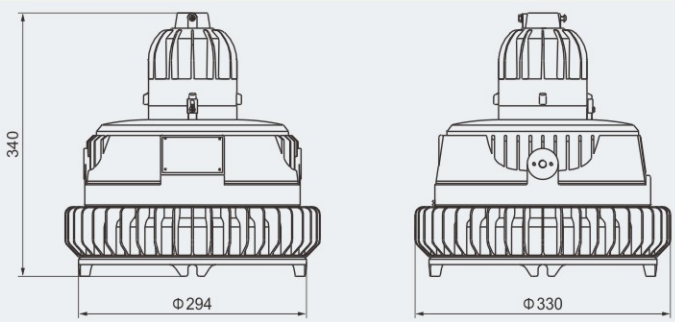

Technical data

Explosion-proof LED lightings HRD95-240-□□

Explosion protection	
Global (IECEx)	IECEx CNEX 18.0024 X
Gas and dust	Ex db op is IIC T□[1] Gb Ex tb op is IIIC T□[1] Db IP66
Europe (ATEX)	CNEX 18 ATEX 0020X
Gas and dust	Ⓔx II 2 G Ex db op is IIC T□[1] Gb Ⓔx II 2 D Ex tb op is IIIC T□[1] Db IP66
	[1] See Selection Table
Certificates	IECEx; ATEX; CU-TR
Conformity to standards	EN 60079-0, EN 60079-1, EN 60079-28, EN 60079-31 IEC 60079-0, IEC 60079-1, IEC 60079-28, IEC 60079-31
Material	
Enclosure	Copper-free aluminium alloy, powder coated surface, yellow (RAL1021)
Glass cover	Toughened glass, stands 4J impact
Exposed fastener	Stainless steel
LED driver	Wide voltage input, CC-CV (constant current - constant voltage) output, power factor ≥0.95, with function of distributed current, constant current, surge-proof and anti-electromagnetic interference, and protection against overcurrent, open circuit, and short circuit
Lamp	
Lamp specification	LED module, Multiple LED
Lamp power (W)	200W, 240W
Colour rendering index (Ra)	⩾80
Colour temperature (CCT)	5700K Note: cool white is available in general. Warm white or nature white is optional, please specify when ordering.
Rated voltage	100~277V AC 50/60Hz, 130~250V DC
Earthing protection	M5 (internal & external earth bolts)
Degree of protection	IP66
Ambient temperature	-40℃~+55℃(+40℃)
Terminal	3 x 1.5~4mm^2 (L+N+PE)
Mounting	bracket type, wall type, ceiling type
Cable entries	2 x M25 x 1.5 (bracket type) 4 x M25 x 1.5 (wall type, ceiling type)
Cable gland	DQM-II (Ex d) or DQM-III (Ex d) is recommended. Please see P7/22~31

Selection table

Rated power(W)	Temperature classification			
	-40℃⩽Ta⩽+40℃		-40℃⩽Ta⩽+55℃	
	Gas	Dust	Gas	Dust
200	81℃ (T5)	81℃	96℃ (T4)	96℃
240	99℃ (T4)	99℃	114℃ (T4)	114℃

Dimension drawings (all dimensions in mm) - subject to alteration

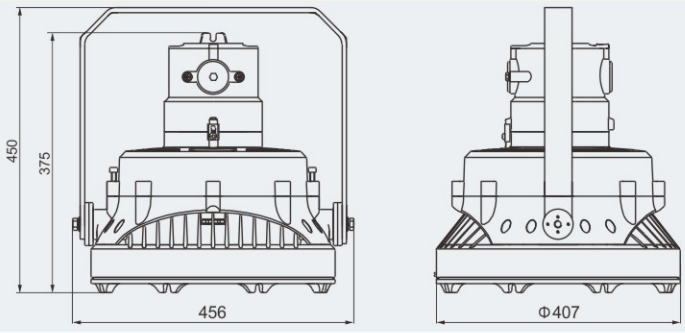

Photometric data

Note: LED luminous flux is from the standard product of which colour temperature is 5700K (cool white).

HRD95-90-□□

Lamp power (W)	Luminous flux	Wattage
60	7200lm	61W
90	10450lm	90W

(Standard products without lens)

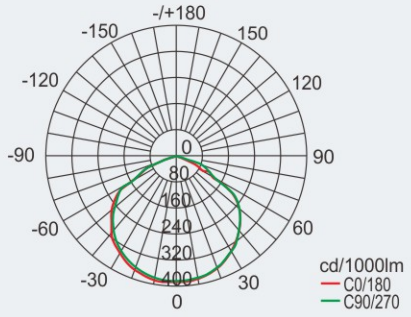

HRD95-90-□□

Lamp power (W)	Luminous flux	Wattage
60	7200lm	61W
90	10450lm	90W

(With 60° lens)

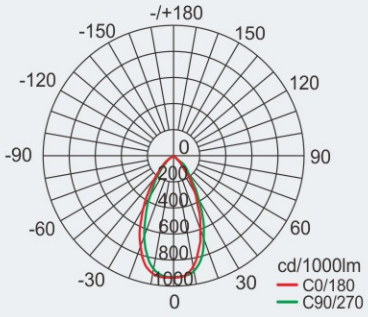

Note: Lens of 40° and 25° can be provided on request.

HRD95-160-□□

Lamp power (W)	Luminous flux	Wattage
120	13200lm	120W
160	19250lm	160W

(Standard products without lens)

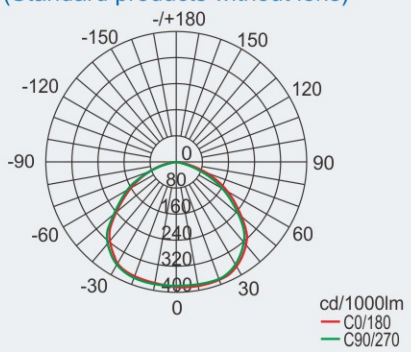

HRD95-160-□□

Lamp power (W)	Luminous flux	Wattage
120	13200lm	120W
160	19250lm	160W

(With 60° lens)

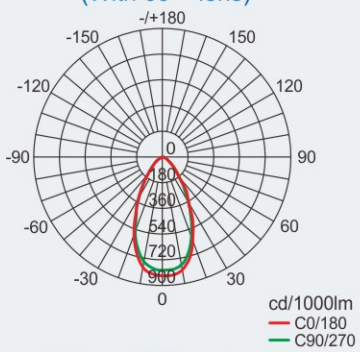

Note: Lens of 40° and 25° can be provided on request.

HRD95-240-□□

Lamp power (W)	Luminous flux	Wattage
200	25000lm	205W
240	28200lm	245W

(Standard products without lens)

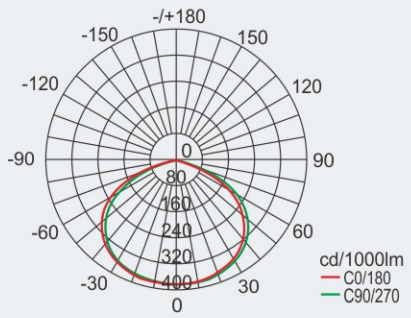

We can provide lighting design and data by professional lighting software DIALUX based upon simulated site situation on request.

Mounting type (all dimensions in mm) - subject to alteration

K: bracket type

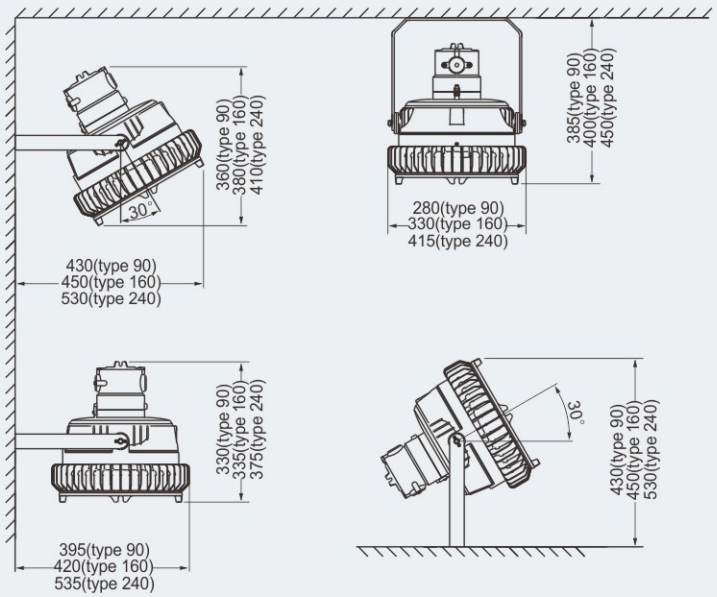

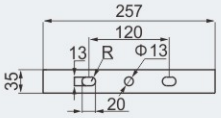

Bracket mounting dimension of type 90, type 160

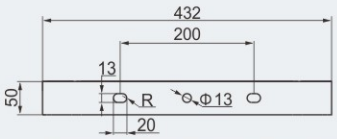

Bracket mounting dimension of type 240

G:pendant pole type

Note: pendant pole type is unavailable to type 240.

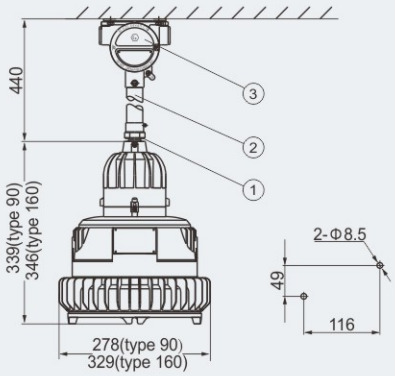

Accessories supplied with the light fittings:
①.BGJ-III explosion-proof connector M25×1.5(M)/M25×1.5(F), Stainless steel.
②.Straight pipe (M25 x 1.5), length: 300mm.
③.BHD51-F(for type 90 and type 160: Copper-free Aluminium Alloy), see P3/4.

D: hook type

Note: hook type is unavailable to type 240.

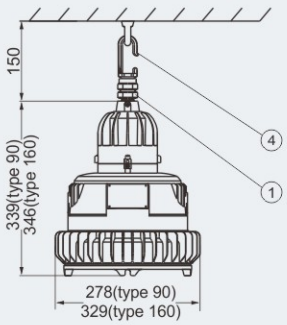

Accessories supplied with the light fittings:
①.BGJ-III explosion-proof connector M25×1.5 (M)/M25×1.5(F), Stainless steel.
④.Hook (Stainless steel).

L: pole type

Note: pole type is unavailable to type 240.

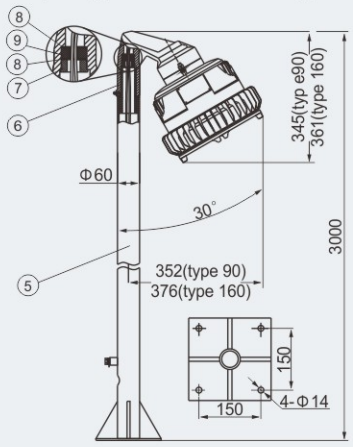

Accessories supplied with thelight fittings:
⑤. Pole (shall be provided by user).
⑥. Outlet sleeve.
⑦. Locking bolt.
⑧. Washer.
⑨. Sealing ring

X: ceilling type

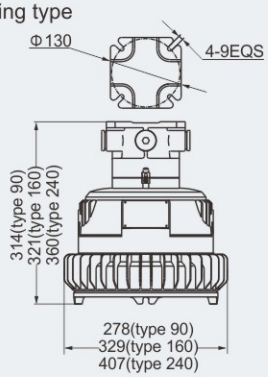

B: wall type

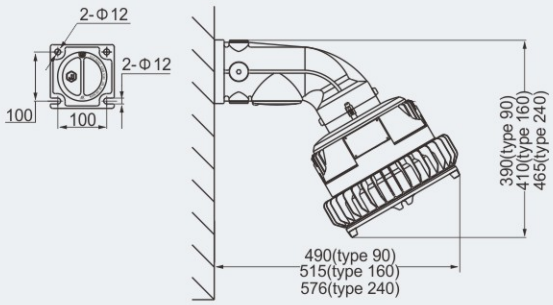

LED Light Fittings
HRD97 Series Explosion-proof LED Lightings



- Explosion protection to
  -CENELEC
  -IEC
  -NEC
- Can be used in
  Zone 1 and Zone 2
  Zone 21 and Zone 22
  Class I, Zone 1 and Zone 2
  Class I, Division 1, Groups A, B, C, D
- Applicable lamp and power (max.20W)
  LED : 10W, 20W
- Isolated LED lamp compartment, CC-CV (constant current - constant voltage) power controller compartment and terminal compartment; Wind-convection heat dissipation structure
- Low-maintenance costs due to long service life, which is up to 100,000 operating hours.

Catalogue number logic

HRD97-□ □

- Mounting
  - K: bracket type
  - X: ceiling type
- Lamp power (W)
- Explosion-proof LED lightings

Selection table

Type / Ordering code	Lamp power(W)
HRD97-10 □	10
HRD97-20 □	20

Note: 1. Products above include all the mounting accessories listed in Mounting Accessories & Spare Parts Table (see P2/69).
2. The product is supplied according to “Type/Ordering code” in the table with mounting accessories.

Zones 1&2; 21&22

Technical data

Explosion-proof LED lightings HRD97-□□

Explosion protection	
Global (IECEx)	IECEx CQM 22.0036X
Gas and dust	Ex db IIC T6 Gb Ex tb IIIC T80℃ Db
Europe (ATEX)	UL 23 ATEX 3016X
Gas and dust	Ⓔx II 2 G Ex db IIC T6 Gb Ⓔx II 2 D Ex tb IIIC T80℃ Db
Certificates	IECEx; ATEX
Conformity to standards	EN 60079-0, EN 60079-1, EN 60079-31 IEC 60079-0, IEC 60079-1, IEC 60079-31
Material	
Enclosure	Copper-free aluminium alloy, powder coated surface, yellow (RAL1021)
Transparent cover	Toughened glass, stands 4J impact
Exposed fastener	Stainless steel
LED driver	Wide voltage input, CC-CV (constant current - constant voltage) output, power factor ≥0.95, with function of distributed current, constant current, surge-proof and anti-electromagnetic interference, and protection against overcurrent, open circuit, and short circuit
Lamp	
Lamp specification	Integrated LED, Multiple LED
Lamp power (W)	10W, 20W
Colour rendering index (Ra)	⩾80
Colour temperature (CCT)	5700K Note: cool white is available in general. Warm white or nature white is optional, please specify when ordering.
Rated voltage	24V AC 50/60Hz, 36V AC 50/60Hz, 100~277V AC 50/60Hz, 24V DC, 36V DC
Earthing protection	M5 (internal & external earth bolts)
Degree of protection	IP66
Ambient temperature	-40℃~+60℃
Terminal	3 x 1.5~4mm^2 (L+N+PE)
Mounting	Bracket type, Ceiling type
Cable entries	M25 x 1.5
Cable gland	See Mounting Accessories & Spare Parts Table
Available cable outer diameter	Φ10~Φ14(mm)

Dimension drawings (all dimensions in mm) - subject to alteration

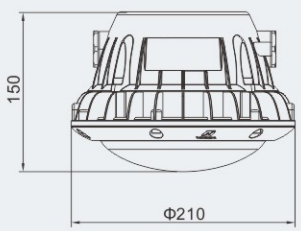

Photometric data

Note: LED luminous flux is from the standard product of which colour temperature is 5700K



HRD97-10□

Lamp power (W)	Luminous flux	Wattage
10	1200lm	10W

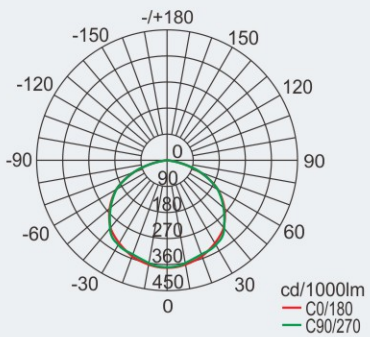

HRD97-20□

Lamp power (W)	Luminous flux	Wattage
20	2500lm	20W

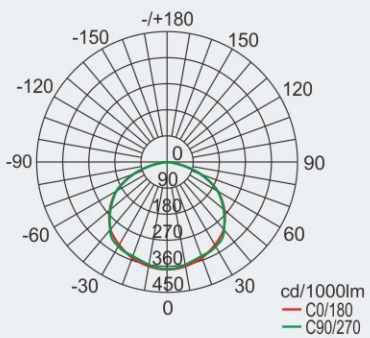

We can provide lighting design and data by professional lighting software DIALUX based upon simulated site situation on request.

Mounting type (all dimensions in mm) - subject to alteration

X: ceiling type

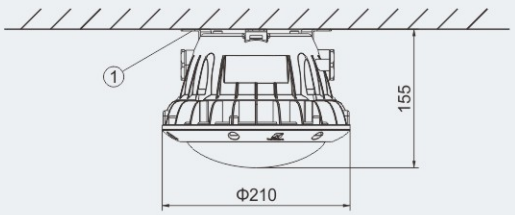

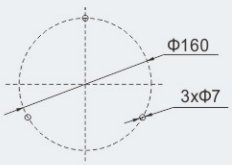

Weight: 3.30kg
Accessories supplied with the light fittings:
①. Mounting feet

K: bracket type

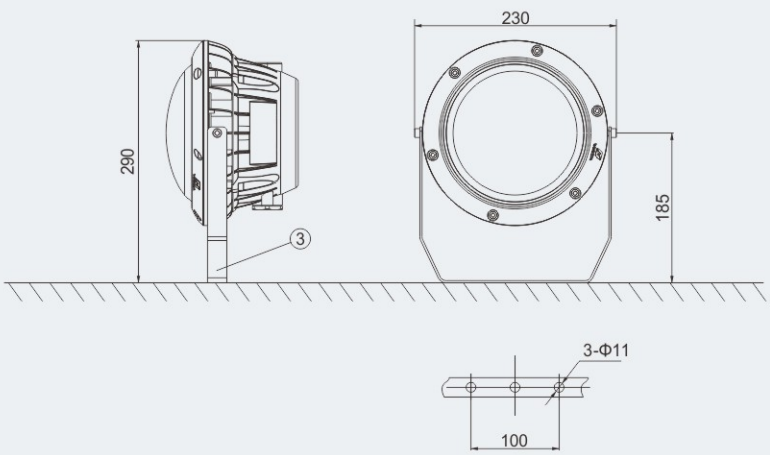

Weight: 3.80kg
Accessories supplied with the light fittings:
③. Wall bracket

LED Light Fittings
HRD99 Series Explosion-proof LED Lightings



- Explosion protection to
  -CENELEC
  -IEC
  -NEC
- Can be used in
  Zone 1 and Zone 2
  Zone 21 and Zone 22
  Class I, Zone 1 and Zone 2
  Class I, Division 1, Groups A, B, C, D
- Applicable lamp and power (max.100W)
  LED : 20W, 30W, 50W, 70W, 80W, 100W,
- Isolated LED lamp compartment, CC-CV (constant current - constant voltage) power controller compartment and terminal compartment; Wind-convection heat dissipation structure.
- Low-maintenance costs due to long service life, which is up to 100,000 operating hours.

Catalogue number logic

HRD99-□ □

- Mounting
  - X: Ceiling type
  - G: Pendant type
  - K: Bracket type
  - L: Pole type
- Lamp power (W)
- Explosion-proof LED lightings

Selection table

Type / Ordering code	Lamp power(W)
HRD99-20 □	20
HRD99-30 □	30
HRD99-50 □	50
HRD99-70 □	70
HRD99-80 □	80
HRD99-100 □	100

Note: 1. Products above include all the mounting accessories listed in Mounting Accessories & Spare Parts Table (see P2/73).
2. The product is supplied according to “Type/Ordering code” in the table with mounting accessories.

Zones 1&2; 21&22

Technical data

Explosion-proof LED lightings HRD99-□□

Explosion protection	
Global (IECEx)	IECEx (applied for)
Gas and dust	Ex db IIB T6/T5 Gb Ex db IIC T6/T5 Gb Ex tb IIIC T80℃/T95℃ Db
Europe (ATEX)	ATEX (applied for)
Gas and dust	Ⓔx II 2 G Ex db IIB T6/T5 Gb Ⓔx II 2 G Ex db IIC T6/T5 Gb Ⓔx II 2 D Ex tb IIIC T80℃/T95℃ Db
Certificates	IECEx; ATEX
Conformity to standards	EN 60079-0, EN 60079-1, EN 60079-31 IEC 60079-0, IEC 60079-1, IEC 60079-31
Material	
Enclosure	Copper-free aluminium alloy, powder coated surface, yellow (RAL1021)
Transparent cover	Polycarbonate, stands 4J impact
Exposed fastener	Stainless steel
LED driver	Wide voltage input, CC-CV (constant current - constant voltage) output, power factor ≥0.95, with function of distributed current, constant current, surge-proof and anti-electromagnetic interference, and protection against overcurrent, open circuit, and short circuit
Lamp	
Lamp specification	Integrated LED, Multiple LED
Lamp power (W)	20W, 30W, 50W, 70W, 80W, 100W
Colour rendering index (Ra)	⩾80
Colour temperature (CCT)	5700K Note: cool white is available in general. Warm white or nature white is optional, please specify when ordering.
Rated voltage	220~240V AC 50/60Hz, 24~48V DC
Earthing protection	M5 (internal & external earth bolts)
Degree of protection	IP66
Ambient temperature	IIB T6 / IIIC T80℃ for Tamb: -40℃~+40℃ IIB T5 / IIIC T95℃ for Tamb: -40℃~+58℃ IIC T6 for Tamb: -20℃~+40℃ IIC T5 for Tamb: -20℃~+58℃
Terminal	3 x 1.5~4mm^2 (L+N+PE)
Mounting	Bracket type, Ceiling type, Pendant type, Pole type
Cable entries	M25 x 1.5
Cable gland	See Mounting Accessories & Spare Parts Table
Available cable outer diameter	Φ10~Φ14(mm)

LED Light Fittings
HRD99 Series Explosion-proof LED Lightings

Dimension drawings (all dimensions in mm) - subject to alteration

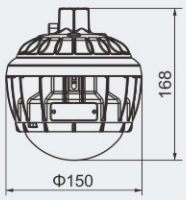

20W, 30W

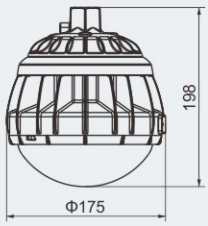

50W, 70W

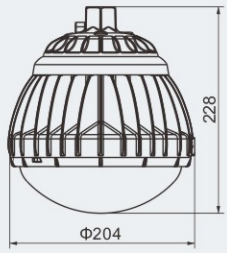

80W, 100W

Photometric data Note: LED luminous flux is from the standard product of which colour temperature is 5700K (cool white).

HRD99-20□

Lamp power (W)	Luminous flux	Wattage
20	2500lm	23W

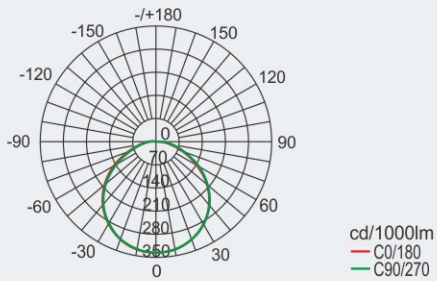

HRD99-30□

Lamp power (W)	Luminous flux	Wattage
30	3300lm	31W

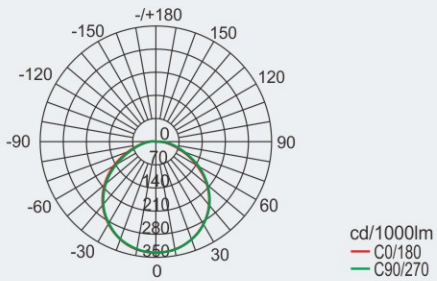

HRD99-50□

Lamp power (W)	Luminous flux	Wattage
50	6500lm	55W

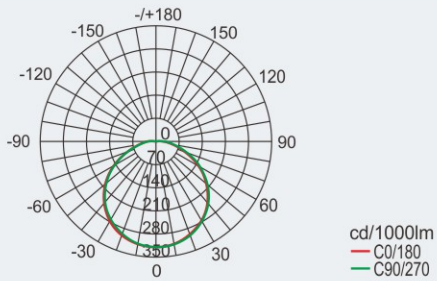

HRD99-70□

Lamp power (W)	Luminous flux	Wattage
70	8300lm	74W

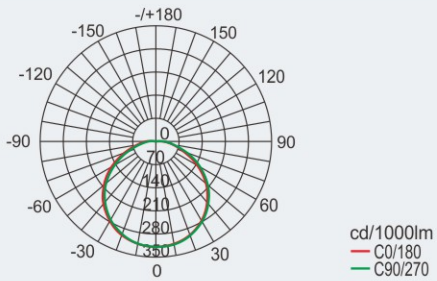

HRD99-80□

Lamp power (W)	Luminous flux	Wattage
80	9400lm	78W

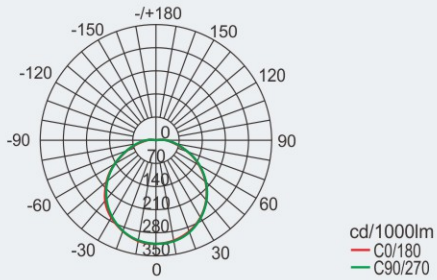

HRD99-100□

Lamp power (W)	Luminous flux	Wattage
100	11700lm	104W

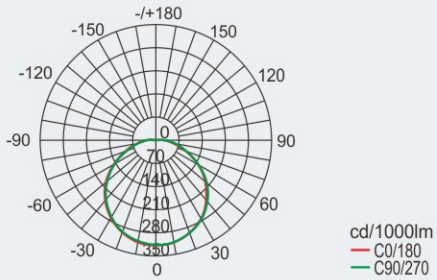

We can provide lighting design and data by professional lighting software DIALUX based upon simulated site situation on request.

Mounting type (all dimensions in mm) - subject to alteration

X: Ceiling type

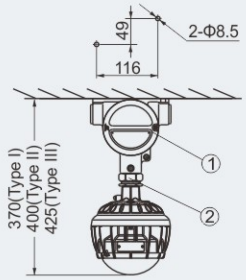

Weight: 2.40kg (20W)(30W)
3.00kg (50W)(70W)
3.80kg (80W)(100W)

Accessories supplied with the light fittings:
①. BHD51-F(Ex d IIC,copper-free aluminium alloy)
②. BGJ-III Explosion-proof connector
M25×1.5(M)/M25×1.5 (M), Stainless steel.

G: Pendant type

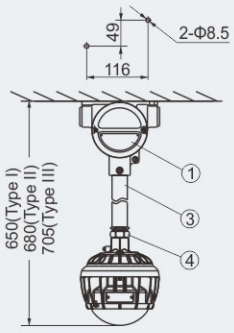

Weight: 2.80kg (20W)(30W)
3.40kg (50W)(70W)
4.20kg (80W)(100W)

Accessories supplied with the light fittings:
①. BHD51-F(Ex d IIC, copper-free aluminium alloy).
③. Straight pipe(M25×1.5), length: 300mm.
④. BGJ-III Explosion-proof connector
M25×1.5(M)/M25×1.5(F), Stainless steel.

K: Bracket type

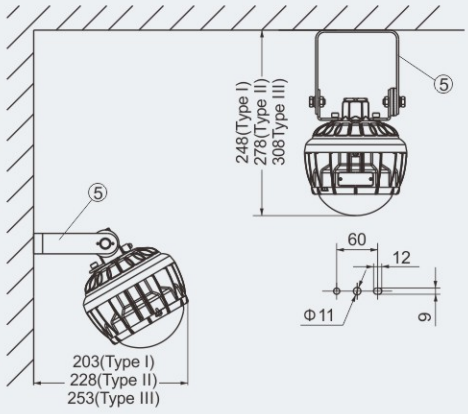

Weight: 1.70kg (20W)(30W)
2.30kg (50W)(70W)
3.00kg (80W)(100W)

Accessories supplied with the light fittings:
⑤. Mounting bracket, sheet steel, powder coated.

L: Pole type

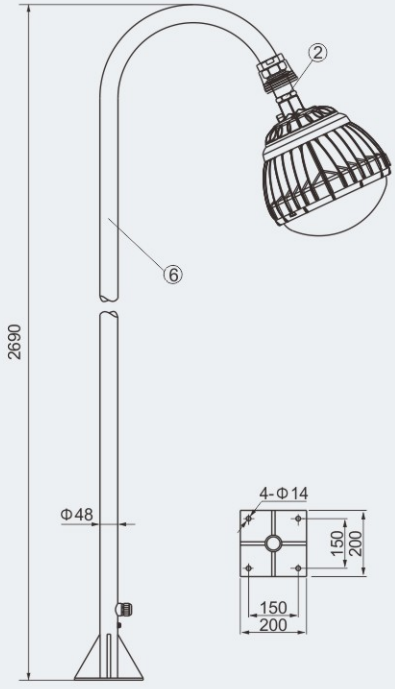

Weight: 1.60kg (20W)(30W)
2.20kg (50W)(70W)
2.90kg (80W)(100W)

Accessories supplied with the light fittings:
②. BGJ-III Explosion-proof connector
M25×1.5(M)/M25×1.5 (M), Stainless steel.
⑥. Pole (shall be provided by user)

LED Light Fittings
HRJ Series Explosion-proof Emergency LED Light Fittings



- Explosion protection to
  -CENELEC
  -IEC
  -NEC
- Can be used in
  Zone 1 and Zone 2
  Zone 21 and Zone 22
  Class I, Zone 1 and Zone 2
  Class I, Division 2, Groups A, B, C, D
- Isolated LED lamp compartment, CC-CV (constant current - constant voltage) power controller compartment and terminal compartment; Wind-convection heat dissipation structure.
- International brand white light LED, reasonable arrangement of multi LED, high lighting efficiency and long service life.
- Emergency device with battery pack, charging automatically; when power supply is cut off, the emergency device starts to work; with overcharge and overdischarge protection.
- Toughened glass cover resistant to temperature changes.
- Low-maintenance costs due to long service life, which is up to 100,000 operating hours.

Catalogue number logic

HRJ - □ / □ □

- Mounting | K: bracket type
- Emergency power (W)
- Lamp power (W)
- Explosion-proof emergency LED light fittings

WAROM

Zones 1&2; 21&22

Technical data

Explosion-proof emergency LED light fittings HRJ-30/20□

Explosion protection	
Global (IECEx)	IECEx CNEX 20.0005X
Gas and dust	Ex db op is IIC T6 Gb Ex tb op is IIIC T80℃ Db
Europe (ATEX)	CNEX 20 ATEX 0004X
Gas and dust	Ⓔx II 2 G Ex db op is IIC T6 Gb Ⓔx II 2 D Ex tb op is IIIC T80℃ Db
Certificates	IECEx; ATEX; CU-TR; INMETRO
Conformity to standards	EN 60079-0, EN 60079-1, EN 60079-28, EN 60079-31 IEC 60079-0, IEC 60079-1, IEC 60079-28, IEC 60079-31
Material	
Enclosure	Copper-free Aluminium Alloy, powder coated surface, yellow (RAL1021)
Glass cover	Toughened glass, stands 4J impact
Exposed fastener	Stainless steel
LED driver	Wide voltage input, CC-CV (constant current - constant voltage) output, with function of distributed current, constant current, surge-proof and anti-electromagnetic interference, and protection against overcurrent, open circuit, and short circuit
Emergency controller	Special emergency controller and battery pack, with protection against over-charge and overdischarge
Lamp	
Lamp specification	LED module, Multiple LED
Lamp power (W)	30W
Emergency power (W)	20W
Colour rendering index (Ra)	⩾80
Colour temperature (CCT)	5700K Note: cool white is available in general. Warm white or nature white is optional, please specify when ordering.
Rated voltage	100~277V AC 50/60Hz
Charging time	24h
Emergency duration	90min(120min is optional)
Earthing protection	M5 (internal & external earth bolts)
Degree of protection	IP66
Ambient temperature	-40℃~+60℃
Terminal	5 x 1.5~4mm^2
Mounting	bracket type
Cable entries	2 x M25 x 1.5
Cable gland	DQM-II (Ex d) or DQM-III (Ex d) is recommended. Please see P7/22~31
Weight	9.95kg

Dimension drawings (all dimensions in mm) - subject to alteration

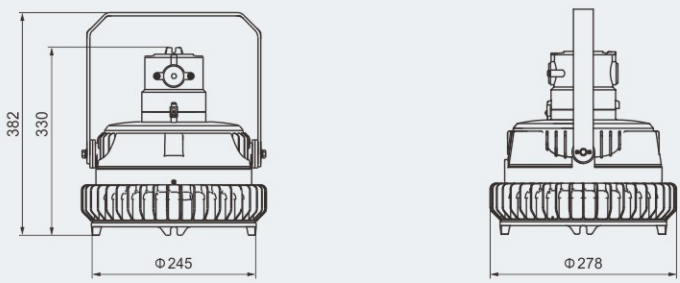

HRJ-30/20□

Technical data

Explosion-proof emergency LED light fittings HRJ-60/40□

Explosion protection	
Global (IECEx)	IECEx CNEX 20.0005X
Gas and dust	Ex db op is IIC T6 Gb Ex tb op is IIIC T80℃ Db
Europe (ATEX)	CNEX 20 ATEX 0004X
Gas and dust	Ⓔx II 2 G Ex db op is IIC T6 Gb Ⓔx II 2 D Ex tb op is IIIC T80℃ Db
Certificates	IECEx; ATEX; CU-TR; INMETRO
Conformity to standards	EN 60079-0, EN 60079-1, EN 60079-28, EN 60079-31 IEC 60079-0, IEC 60079-1, IEC 60079-28, IEC 60079-31
Material	
Enclosure	Copper-free Aluminium Alloy, powder coated surface, yellow (RAL1021)
Glass cover	Toughened glass, stands 4J impact
Exposed fastener	Stainless steel
LED driver	Wide voltage input, CC-CV (constant current - constant voltage) output, with function of distributed current, constant current, surge-proof and anti-electromagnetic interference, and protection against overcurrent, open circuit, and short circuit
Emergency controller	Special emergency controller and battery pack, with protection against over-charge and overdischarge
Lamp	
Lamp specification	LED module, Multiple LED
Lamp power (W)	60W
Emergency power (W)	40W
Colour rendering index (Ra)	⩾80
Colour temperature (CCT)	5700K Note: cool white is available in general. Warm white or nature white is optional, please specify when ordering.
Rated voltage	100~277V AC 50/60Hz
Charging time	24h
Emergency duration	90min(120min is optional)
Earthing protection	M5 (internal & external earth bolts)
Degree of protection	IP66
Ambient temperature	-40℃~+60℃
Terminal	5 x 1.5~4mm^2
Mounting	bracket type
Cable entries	2 x M25 x 1.5
Cable gland	DQM-II (Ex d) or DQM-III (Ex d) is recommended. Please see P7/22~31
Weight	12.85kg

Dimension drawings (all dimensions in mm) - subject to alteration

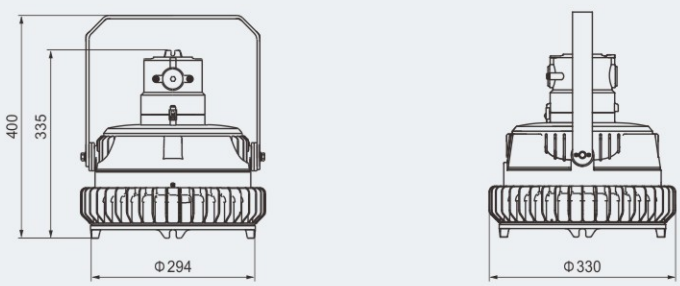

HRJ-60/40□

Photometric data
Note: LED luminous flux is from the standard product of which colour temperature is 5700K (cool white).

HRJ-30/20□

Lamp power (W)	Luminous flux	Wattage
30	3300lm	31.5W

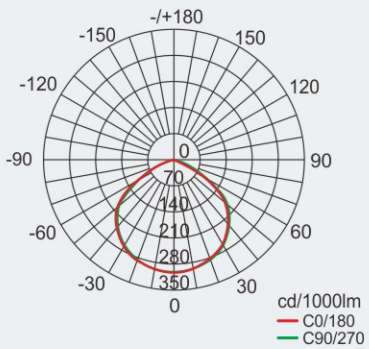

HRJ-60/40□

Lamp power (W)	Luminous flux	Wattage
60	6350lm	60W

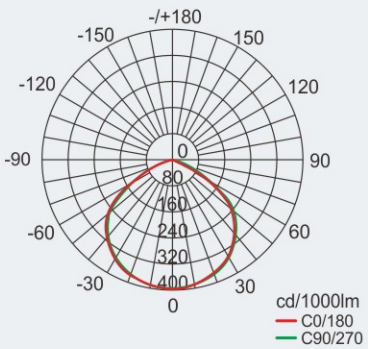

Mounting type
(all dimensions in mm) - subject to alteration

K: bracket type

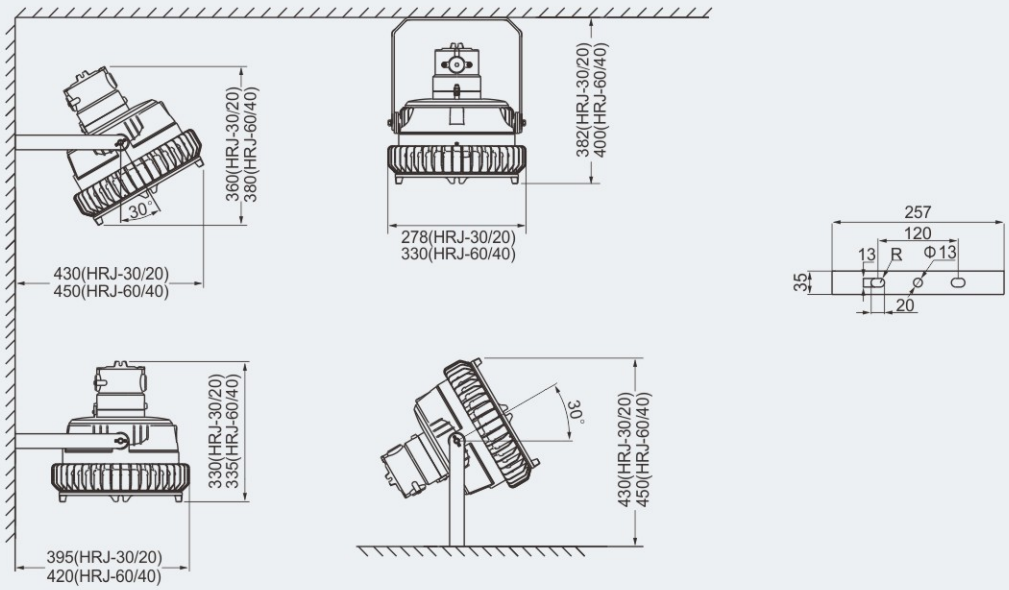

LED Light Fittings
BDD95 Series Explosion-proof LED Lightings



- Explosion protection to
  -CENELEC
  -IEC
  -NEC
- Can be used in
  Zone 1 and Zone 2
  Zone 21 and Zone 22
  Class I, Zone 1 and Zone 2
  Class I, Division 2, Groups A, B, C, D
- Two enclosure types:90, 160
- Applicable lamp and power (max.160W)
  LED: 60W, 90W, 120W, 160W
- Isolated LED lamp compartment, CC-CV (constant current - constant voltage) power controller compartment and terminal compartment; Wind-convection heat dissipation structure.
- New COB technology, large power and white light LED array, power of single LED can reach 20W~40W, high lighting efficiency, long service life.
- Two types of light distribution: spotlight and floodlight, which can be selected on request.
- 160 type lightings adopt light fitting integrated two lamps, the power of whole machine is of 2x120W, 2x160W.
- Low-maintenance costs due to long service life, which is up to 100,000 operating hours.

Catalogue number logic

BDD95 - □-□ □

- Mounting
  - D: hook type
  - K: bracket type
  - L: pole type
- Lamp power (W)
- Enclosure type: 90, 160
- Explosion-proof LED lightings

Selection table

Type / Ordering code	Lamp power(W)	Weight (kg)	Type / Ordering code	Lamp power(W)	Weight (kg)	Type / Ordering code	Lamp power(W)	Weight (kg)
BDD95-90-60K	60	8.50	BDD95-90-60D	60	8.10	BDD95-90-60L	60	8.10
BDD95-90-90K	90	8.50	BDD95-90-90D	90	8.10	BDD95-90-90L	90	8.10
BDD95-160-120K	120	12.20	BDD95-160-120D	120	11.60	BDD95-160-120L	120	11.70
BDD95-160-160K	160	12.20	BDD95-160-160D	160	11.60	BDD95-160-160L	160	11.70

Note: 1. The product is supplied according to “Type/Ordering code” in the table with mounting accessories.
2. Two types of light distribution: spotlight and floodlight. The light fittings are supplied without lens. Lighting distribution is of floodlight. If required, please specify when ordering.

Zones 1&2; 21&22

Technical data

Explosion-proof LED lightings BDD95-90-□□

Explosion protection	
Global (IECEx)	IECEx CQM 15.0047X;
Gas and dust	Ex db eb op is IIC T□[1] Gb Ex tb op is IIIC T□[1] Db
Europe (ATEX)	EPT 15 ATEX 2315X
Gas and dust	Ⓔx II 2 G Ex db eb op is IIC T□[1] Gb Ⓔx II 2 D Ex op is tb IIIC T□[1] Db
	[1] See Selection Table
Certificates	IECEx; ATEX; CU-TR; UL
Conformity to standards	EN 60079-0, EN 60079-1, EN 60079-7, EN 60079-28, EN 60079-31 IEC 60079-0, IEC 60079-1, IEC 60079-7, IEC 60079-28, IEC 60079-31 CSA C22.2 NO.137-M1981; UL 844; UL 8750; UL 1598 CSA C22.2 NO.250.0-08; CSA C22.2 NO.250.13-14
Material	
Enclosure	Copper-free Aluminium Alloy, powder coated surface, yellow (RAL1021)
Glass cover	Toughened glass, stands 4J impact
Exposed fastener	Stainless steel
LED driver	Wide voltage input, CC-CV (constant current - constant voltage) output, power factor ≥0.95, with function of distributed current, constant current, surge-proof and anti-electromagnetic interference, and protection against overcurrent, open circuit, and short circuit
Lamp	
Lamp specification	Integrated LED, Multiple LED
Lamp power (W)	60W, 90W
Colour rendering index (Ra)	⩾80
Colour temperature (CCT)	5700K Note: cool white is available in general. Warm white or nature white is optional, please specify when ordering.
Rated voltage	100~300V AC 50/60Hz, 100~250V DC
Earthing protection	M5 (internal & external earth bolts)
Degree of protection	IP66
Ambient temperature	-40℃~+55℃(+40℃)
Terminal	3 x 1.5~4mm^2 (L+N+PE)
Mounting	bracket type, hook type, pole type
Cable entries	2 x M25 x 1.5 plugs
Cable gland	DQM-I (Ex e) is recommended. Please see P7/19~21.

Selection table

Rated power(W)	Temperature classification			
	-40℃⩽Ta⩽+40℃		-40℃⩽Ta⩽+55℃	
	Gas	Dust	Gas	Dust
60	67℃ (T6)	62℃	82℃ (T6)	77℃
90	87℃ (T5)	82℃	102℃ (T4)	97℃

Dimension drawings (all dimensions in mm) - subject to alteration

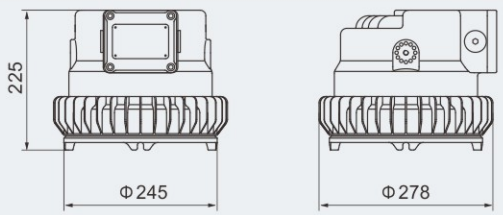

BDD95-90

Technical data

Explosion-proof LED lightings BDD95-160-□□

Explosion protection	
Global (IECEx)	IECEx CQM 15.0047X
Gas and dust	Ex db eb op is IIC T□[1] Gb Ex tb op is IIIC T□[1] Db
Europe (ATEX)	EPT 15 ATEX 2315X
Gas and dust	⟨Ex⟩ II 2 G Ex db eb op is IIC T□[1] Gb ⟨Ex⟩ II 2 D Ex op is tb IIIC T□[1] Db
	[1] See Selection Table
Certificates	IECEx; ATEX; CU-TR; UL
Conformity to standards	EN 60079-0, EN 60079-1, EN 60079-7, EN 60079-28, EN 60079-31 IEC 60079-0, IEC 60079-1, IEC 60079-7, IEC 60079-28, IEC 60079-31 CSA C22.2 NO.137-M1981; UL 844; UL 8750; UL 1598 CSA C22.2 NO.250.0-08; CSA C22.2 NO.250.13-14
Material	
Enclosure	Copper-free Aluminium Alloy, powder coated surface, yellow (RAL1021)
Glass cover	Toughened glass, stands 4J impact
Exposed fastener	Stainless steel
LED driver	Wide voltage input, CC-CV (constant current - constant voltage) output, power factor ≥0.95, with function of distributed current, constant current, surge-proof and anti-electromagnetic interference, and protection against overcurrent, open circuit, and short circuit
Lamp	
Lamp specification	Integrated LED, Multiple LED
Lamp power (W)	120W, 160W
Colour rendering index (Ra)	⩾80
Colour temperature (CCT)	5700K Note: cool white is available in general. Warm white or nature white is optional, please specify when ordering.
Rated voltage	100~300V AC 50/60Hz, 135~250V DC
Earthing protection	M5 (internal & external earth bolts)
Degree of protection	IP66
Ambient temperature	-40℃~+55℃(+40℃)
Terminal	3 x 1.5~4mm^2 (L+N+PE)
Mounting	bracket type, hook type, pole type
Cable entries	2 x M25 x 1.5 plugs
Cable gland	DQM-I (Ex e) is recommended. Please see P7/19~21.

Selection table

Rated power(W)	Temperature classification			
	-40℃⩽Ta⩽+40℃		-40℃⩽Ta⩽+55℃	
	Gas	Dust	Gas	Dust
120	72℃ (T6)	67℃	87℃ (T5)	82℃
160	92℃ (T5)	87℃	107℃ (T4)	102℃

Dimension drawings (all dimensions in mm) - subject to alteration

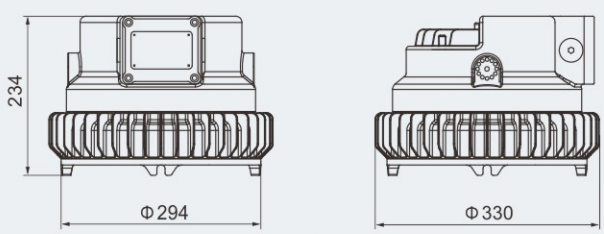

BDD95-160

Photometric data

Note: LED luminous flux is from the standard product of which colour temperature is 5700K (cool white).

BDD95-90-□□

Lamp power (W)	Luminous flux	Wattage
60	7200lm	61W
90	10450lm	90W

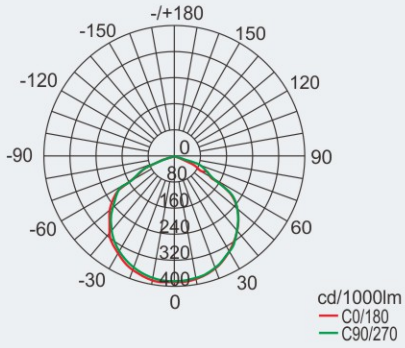

BDD95-90-□□

Lamp power (W)	Luminous flux	Wattage
60	7200lm	61W
90	10450lm	90W

Note: Lens of 45° and 30° can be provided on request.

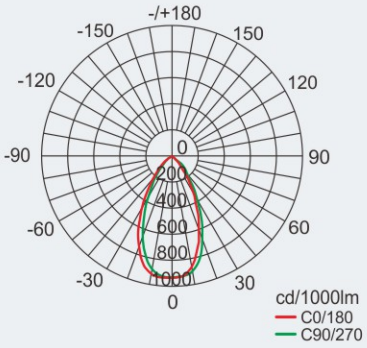

BDD95-160-□□

Lamp power (W)	Luminous flux	Wattage
120	13200lm	120W
160	19250lm	160W

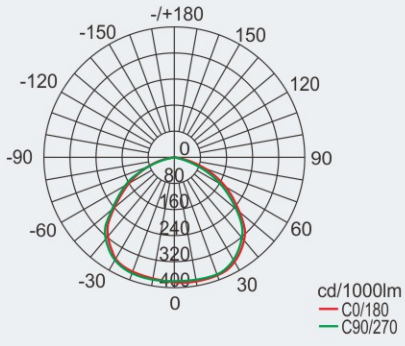

BDD95-160-□□

Lamp power (W)	Luminous flux	Wattage
120	13200lm	120W
160	19250lm	160W

Note: Lens of 45° and 30° can be provided on request.

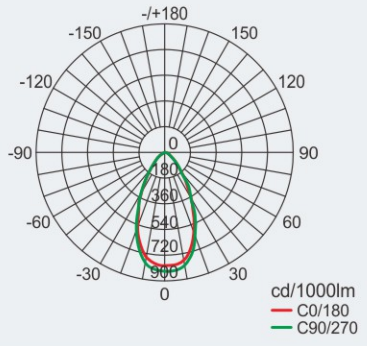

BDD95-160-□□

Note: Measuring parameters of light fitting integrating two lamps

Lamp power (W)	Luminous flux	Wattage
2 x 120	26400lm	240W
2 x 160	38500lm	320W

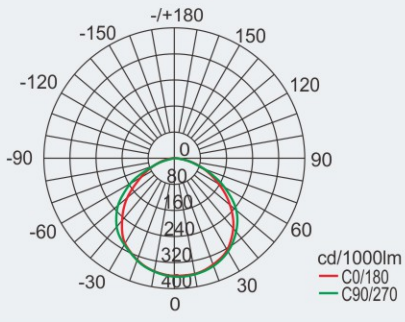

BDD95-160-□□

Note: Measuring parameters of light fitting integrating two lamps

Lamp power (W)	Luminous flux	Wattage
2 x 120	26400lm	240W
2 x 160	38500lm	320W

Note: Lens of 45° and 30° can be provided on request.

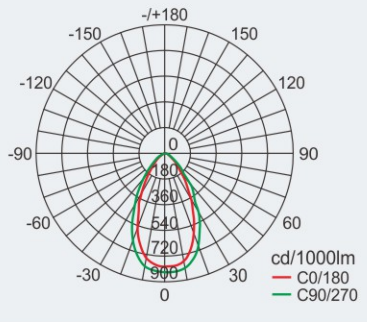

We can provide lighting design and data by professional lighting software DIALUX based upon simulated site situation on request.

Mounting type (all dimensions in mm) - subject to alteration

K: bracket type

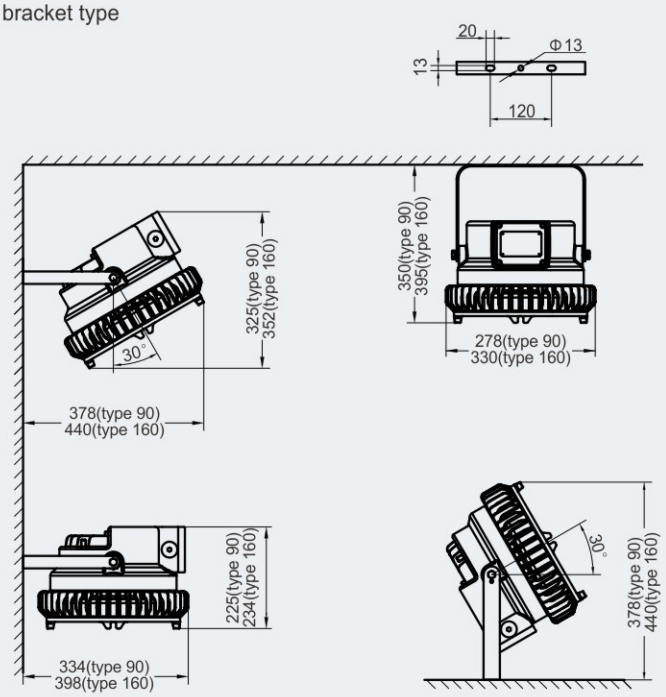

D: hook type

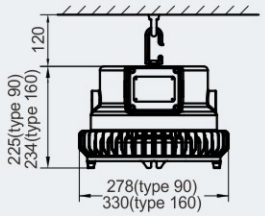

L: pole type (the pole is provided by user)

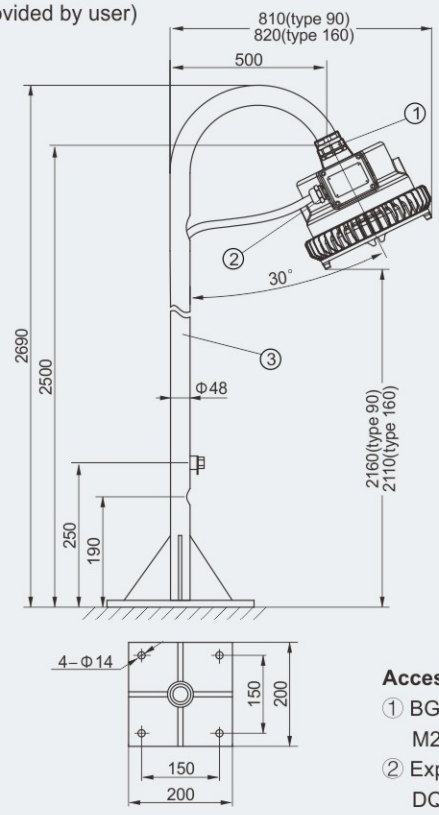

Accessories supplied with the light fittings:

① BGJ-III explosion-proof connector M25x1.5(M) / M25x1.5(M), Stainless steel.

② Explosion-proof cable glands are provided by user. DQM-I (Ex e) is recommended, please see P7/19~21.

③ Pole shall be provided by user.

The description of light fitting integrated two lamps (2x120W, 2x160W)



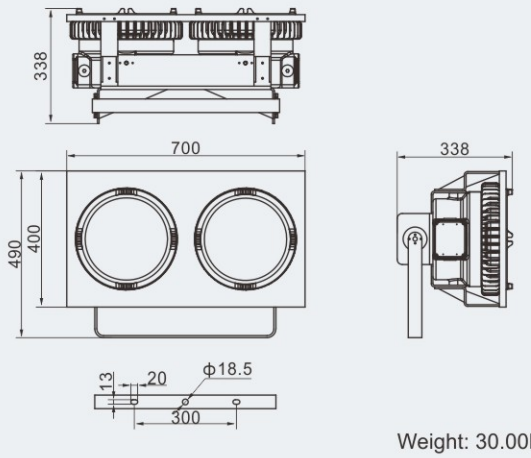

Weight: 30.00kg

Mounting types

Bracket type

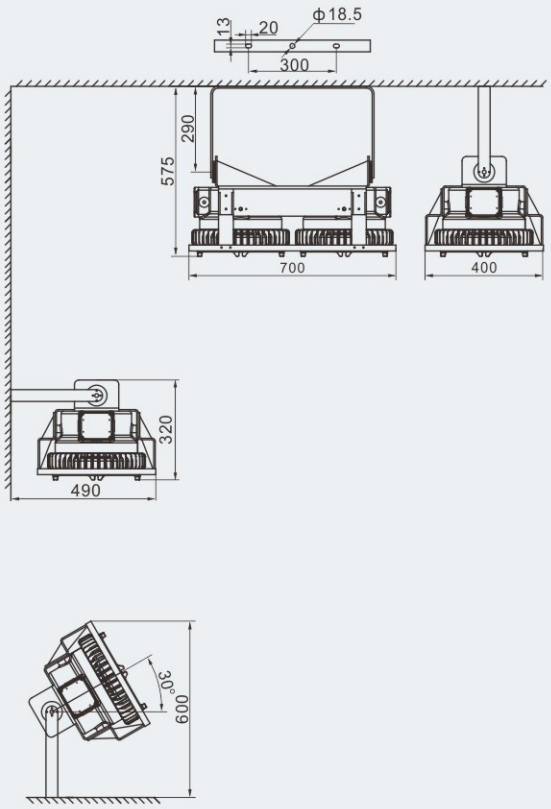

Street lamp type

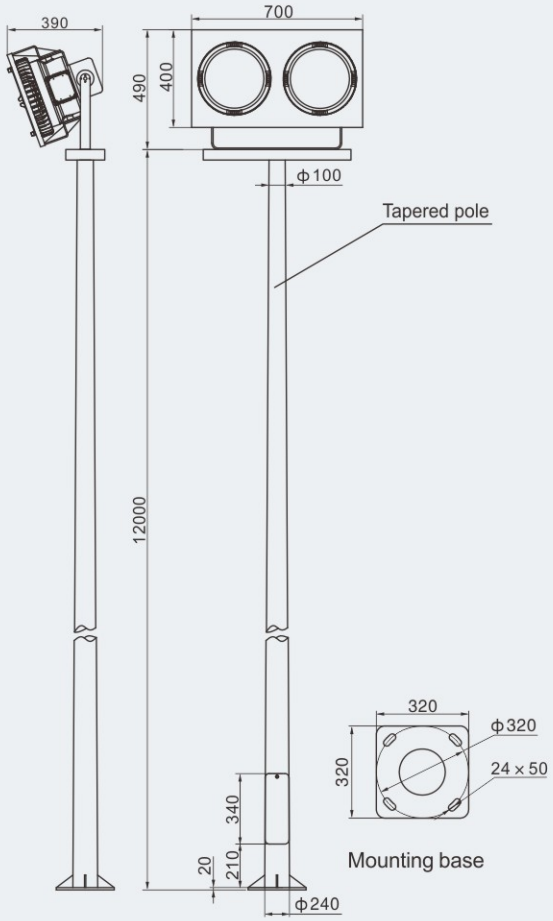

LED Light Fittings
BAT86 Series Explosion-proof LED Floodlights



- Explosion protection to
  -CENELEC
  -IEC
  -NEC
- Can be used in
  Zone 1 and Zone 2
  Zone 21 and Zone 22
  Class I, Zone 1 and Zone 2
  Class I, Division 1, Groups B, C, D
- Three enclosure types:90, 160, 240
- Applicable lamp and power (max.240W)
  LED: 60W, 90W, 120W, 160W, 200W, 240W
- Isolated LED lamp compartment, CC-CV (constant current-constant voltage) power controller compartment and terminal compartment; Wind-convection heat dissipation structure.
- Standard product is of floodlight effect, lens of 60° and 90° can be provided on request to realize spotlight effect.
- 240 type lightings adopt light fitting integrated two lamps, the power of whole machine is of 2x200W, 2x240W
- Low-maintenance costs due to long service life, which is up to 100,000 operating hours.

Catalogue number logic

BAT86 - □-□ □

- Mounting
  - S: street lamp type (only for type 90, type 160)
  - Y: bracket type
  - G: fixed type
- Lamp power (W)
- Enclosure type: 90, 160, 240
- Explosion-proof LED floodlight

Selection table

Type / Ordering code	Lamp power(W)	Weight (kg)	Type / Ordering code	Lamp power(W)	Weight (kg)	Type / Ordering code	Lamp power(W)	Weight (kg)
BAT86-90-60G	60	6.70	BAT86-90-60Y	60	8.50	BAT86-90-60S	60	7.55
BAT86-90-90G	90	6.70	BAT86-90-90Y	90	8.50	BAT86-90-90S	90	7.55
BAT86-160-120G	120	13.00	BAT86-160-120Y	120	14.80	BAT86-160-120S	120	13.85
BAT86-160-160G	160	13.00	BAT86-160-160Y	160	14.80	BAT86-160-160S	160	13.85
BAT86-240-200G	200	28.00	BAT86-240-200Y	200	29.50	BAT86-240-2x200	2x200	78.60
BAT86-240-240G	240	28.00	BAT86-240-240Y	240	29.50	BAT86-240-2x240	2x400	78.60

Note: 1. The product is supplied according to “Type/Ordering code” in the table with mounting accessories.
2. The light fittings are supplied without lens. Lighting distribution is of floodlight. Lens of 60° and 90° can be provided on request. Please specify when ordering.

Zones 1&2; 21&22

Technical data

Explosion-proof LED floodlights BAT86-90-□□

Explosion protection	
Global (IECEx)	IECEx CQM 21.0015X
Gas and dust	Ex db IIB+H_2 T□[1] Gb Ex tb IIIC T□[1] Db
Europe (ATEX)	TÜV CY 21 ATEX 0206545X
Gas and dust	Ⓔx II 2 G Ex db IIB+H_2 T□[1] Gb Ⓔx II 2 D Ex tb IIIC T□[1] Db
	[1] See Ambient temperature
Certificates	IECEx; ATEX; CU-TR; INMETRO
Conformity to standards	EN 60079-0, EN 60079-1, EN 60079-31 IEC 60079-0, IEC 60079-1, IEC 60079-31
Material	
Enclosure	Copper-free Aluminium Alloy, powder coated surface, yellow (RAL1021)
Glass cover	Toughened glass, stands 4J impact
LED driver	Wide voltage input, CC-CV (constant current - constant voltage) output, power factor ≥0.95, with function of distributed current, constant current, surge-proof and anti-electromagnetic interference, and protection against overcurrent, open circuit, and short circuit
Exposed fastener	Stainless steel
Lamp	
Lamp specification	LED module, Multiple LED
Lamp power (W)	60W, 90W (50W and 70W are optional)
Colour rendering index (Ra)	⩾70
Colour temperature (CCT)	5700K Note: cool white is available in general. Warm white or nature white is optional, please specify when ordering.
Rated voltage	100~277V AC 50/60Hz, 130~250V DC
Earthing protection	M5 (internal & external earth bolts)
Degree of protection	IP66
Ambient temperature	T6/T80℃ for Tamb: -60℃~+40℃ T4/T130℃ for Tamb: -60℃~+60℃
Terminal	3 x 1.5~4mm² (L+N+PE)
Mounting	Bracket type, fixed type, street lamp type
Cable entries	2 x M25 x 1.5 plugs
Cable gland	DQM-II (Ex d) or DQM-III (Ex d) is recommended. Please see P7/22~31

Dimension drawings (all dimensions in mm) - subject to alteration

G: fixed type

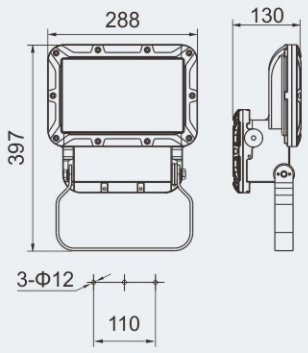

Y: bracket type

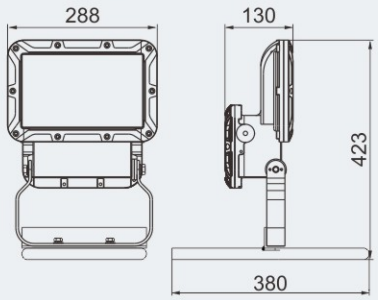

S: street lamp type

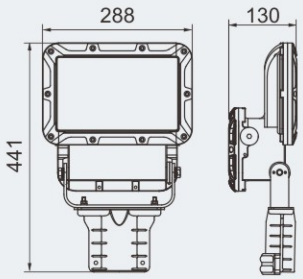

LED Light Fittings
BAT86 Series Explosion-proof LED Floodlights

Technical data

Explosion-proof LED floodlights BAT86-160-□□

Explosion protection	
Global (IECEx)	IECEx CQM 21.0015X
Gas and dust	Ex d IIB T□[1)] Gb Ex tb IIIC T□[1)] Db
Europe (ATEX)	TÜV CY 21 ATEX 0206545X
Gas and dust	Ⓔx II 2 G Ex d IIB T□[1)] Gb Ⓔx II 2 D Ex tb IIIC T□[1)] Db [1)] See Ambient temperature
Certificates	IECEx; ATEX; CU-TR; INMETRO
Conformity to standards	EN 60079-0, EN 60079-1, EN 60079-31 IEC 60079-0, IEC 60079-1, IEC 60079-31
Material	
Enclosure	Copper-free Aluminium Alloy, powder coated surface, yellow (RAL1021)
Glass cover	Toughened glass, stands 4J impact
LED driver	Wide voltage input, CC-CV (constant current - constant voltage) output, power factor ≥0.95, with function of distributed current, constant current, surge-proof and anti-electromagnetic interference, and protection against overcurrent, open circuit, and short circuit
Exposed fastener	Stainless steel
Lamp	
Lamp specification	LED module, Multiple LED
Lamp power (W)	120W, 160W (100W is optional)
Colour rendering index (Ra)	⩾70
Colour temperature (CCT)	5700K Note: cool white is available in general. Warm white or nature white is optional, please specify when ordering.
Rated voltage	100~277V AC 50/60Hz, 130~250V DC
Earthing protection	M5 (internal & external earth bolts)
Degree of protection	IP66
Ambient temperature	120W/160W T6/T80℃ for Tamb: -60℃~+40℃ 120W/160W T5/T95℃ for Tamb: -60℃~+60℃
Terminal	3 x 1.5~4mm^2 (L+N+PE)
Mounting	Bracket type, fixed type, street lamp type
Cable entries	2 x M25 x 1.5 plugs
Cable gland	DQM-II (Ex d) or DQM-III (Ex d) is recommended. Please see P7/22~31

Dimension drawings (all dimensions in mm) - subject to alteration

G: fixed type

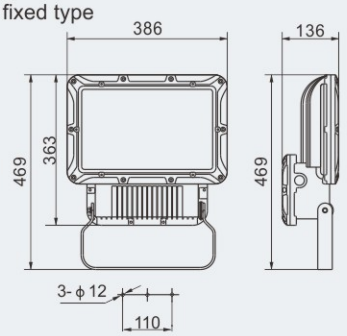

Y: bracket type

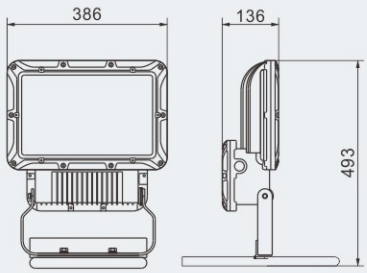

S: street lamp type

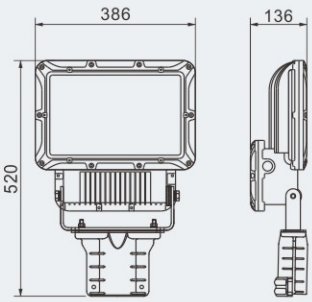

Technical data

Explosion-proof LED floodlights BAT86-240-□□

Explosion protection	
Global (IECEx)	IECEx CQM 21.0015X
Gas and dust	Ex db IIB+H_2 T□[1] Gb Ex tb IIIC T□[1] Db
Europe (ATEX)	TÜV CY 21 ATEX 0206545X
Gas and dust	Ⓔx II 2 G Ex db IIB+H_2 T□[1] Gb Ⓔx II 2 D Ex tb IIIC T□[1] Db [1] See Ambient temperature
Certificates	IECEx; ATEX; CU-TR; INMETRO
Conformity to standards	EN 60079-0, EN 60079-1,EN 60079-28, EN 60079-31 IEC 60079-0, IEC 60079-1,IEC 60079-28, IEC 60079-31
Material	
Enclosure	Copper-free Aluminium Alloy, powder coated surface, yellow (RAL1021)
Glass cover	Toughened glass, stands 4J impact
LED driver	Wide voltage input, CC-CV (constant current - constant voltage) output, power factor ≥0.95, with function of distributed current, constant current, surge-proof and anti-electromagnetic interference, and protection against overcurrent, open circuit, and short circuit
Exposed fastener	Stainless steel
Lamp	
Lamp specification	LED module, Multiple LED
Lamp power (W)	200W, 240W
Colour rendering index (Ra)	⩾80
Colour temperature (CCT)	5700K Note: cool white is available in general. Warm white or nature white is optional, please specify when ordering.
Rated voltage	100~277V AC 50/60Hz, 130~250V DC
Earthing protection	M5 (internal & external earth bolts)
Degree of protection	IP66
Ambient temperature	200W/240W T6/T80℃ for Tamb: -60℃~+40℃ 200W/240W T4/T130℃ for Tamb: -60℃~+60℃
Terminal	3 x 1.5~4mm^2 (L+N+PE)
Mounting	Bracket type, fixed type
Cable entries	2 x M25 x 1.5 plugs
Cable gland	DQM-II (Ex d) or DQM-III (Ex d) is recommended. Please see P7/22~31

Dimension drawings (all dimensions in mm) - subject to alteration

G: fixed type

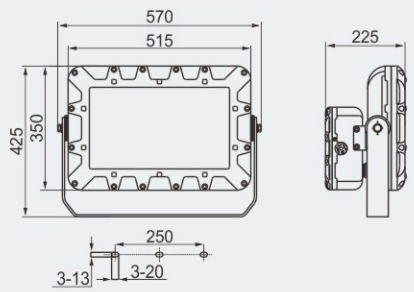

Y: bracket type

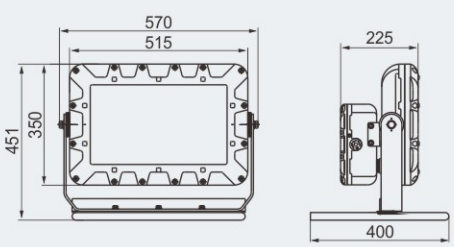

Photometric data

Note: LED luminous flux is from the standard product of which colour temperature is 5700K (cool white).

BAT86-90-□□

Lamp power (W)	Luminous flux	Wattage
60	6500lm	60W
90	9550lm	91W

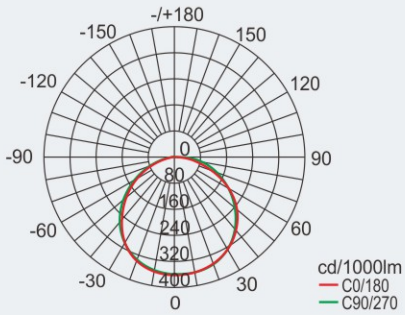

BAT86-90-□□

Lamp power (W)	Luminous flux	Wattage
60	6500lm	60W
90	9550lm	91W

Note: Lens of 40° and 25° can be provided on request.

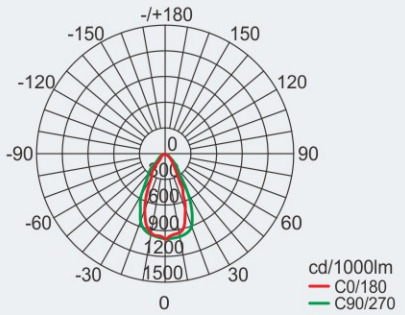

BAT86-160-□□

Lamp power (W)	Luminous flux	Wattage
120	14400lm	120W
160	19800lm	160W

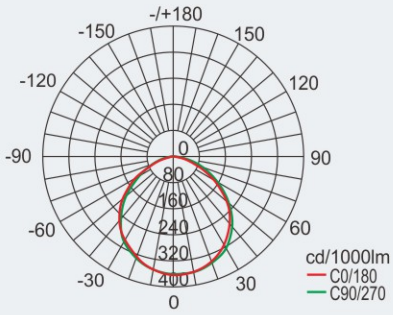

BAT86-160-□□

Lamp power (W)	Luminous flux	Wattage
120	14400lm	120W
160	19800lm	160W

Note: Lens of 40° and 25° can be provided on request.

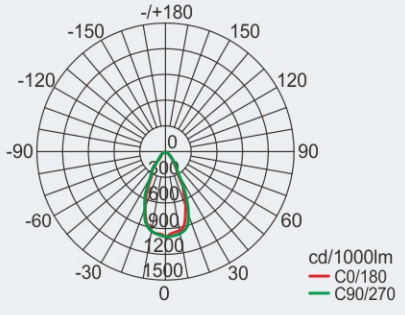

BAT86-240-□□

Lamp power (W)	Luminous flux	Wattage
200	23600lm	205W
240	28400lm	245W

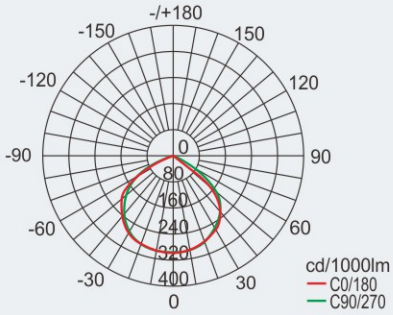

BAT86-240-□□

Note: Measuring parameters of light fitting integrating two lamps

Lamp power (W)	Luminous flux	Wattage
2×200	47200lm	410W
2×240	56800lm	490W

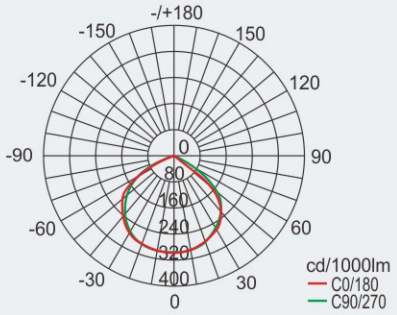

We can provide lighting design and data by professional lighting software DIALUX based upon simulated site situation on request.

Mounting type (all dimensions in mm) - subject to alteration

bracket type

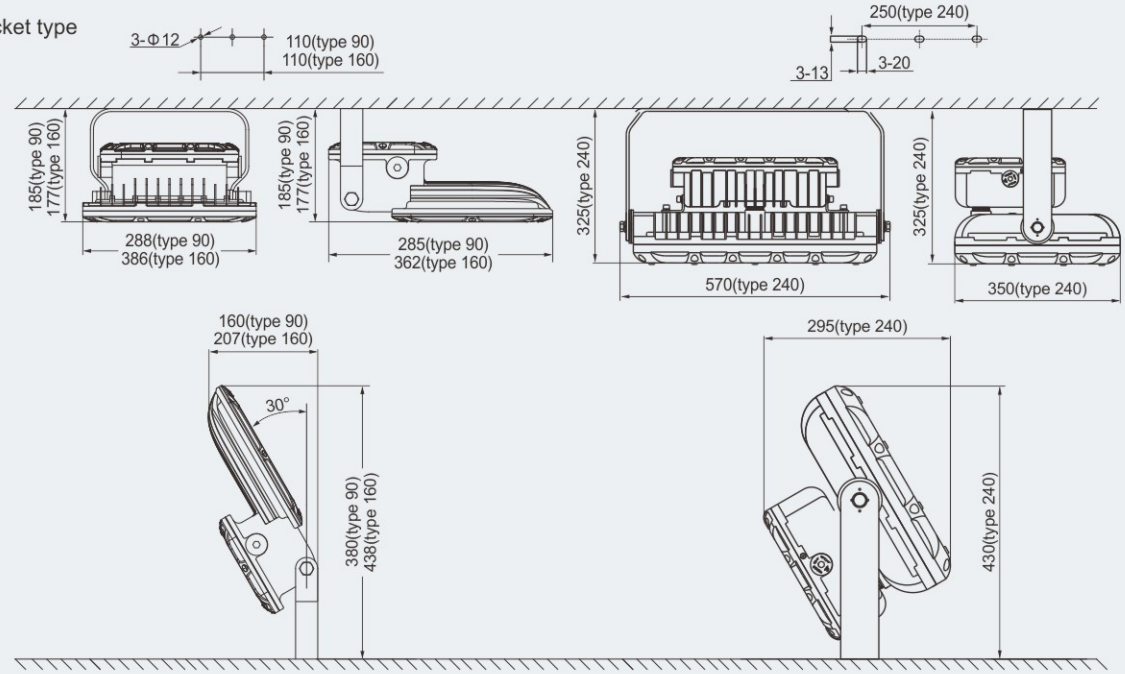

street lamp type

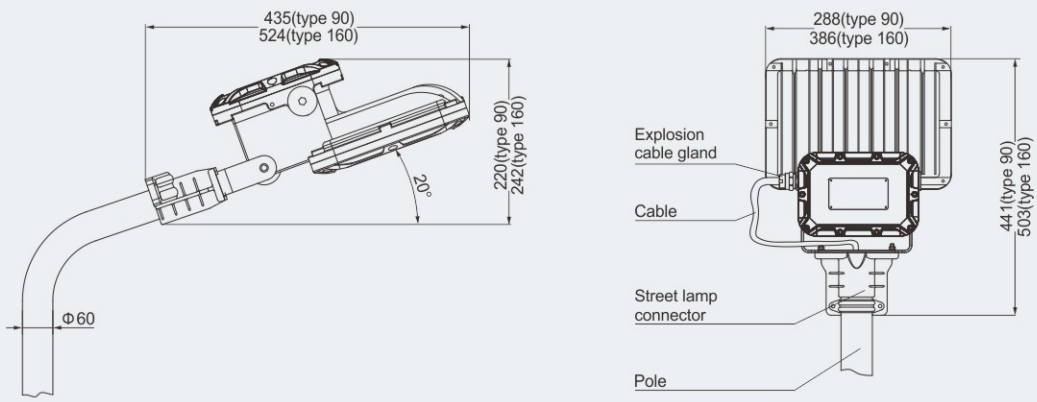

The description of light fitting integrated two lamps (2x200W, 2x240W)



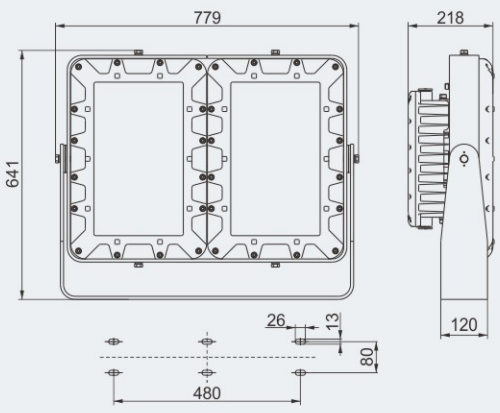

LED Light Fittings
HRND95 Series Explosion-proof LED Lightings



- Explosion protection to
  - CENELEC
  - IEC
  - NEC
- Can be used in
  Zone 2
  Zone 21 and Zone 22
  Class I, Zone 2
  Class I, Division 2, Groups A, B, C, D
- Applicable lamp and power (max.300W)
  LED: 40W, 60W, 80W, 120W, 160W, 200W, 240W, 300W
- International brand white light LED, reasonable arrangement of multi LED, high lighting efficiency and long service life.
- Two types of light distribution: spotlight and floodlight, which can be selected on request.
- Standard luminaries equip with 60° lens, without lens and 30° lens which are optional, please indicate when placing an order.
- Standard luminaries do not equip with external reflector, if need, please specify.
- Low-maintenance costs due to long service life, which is up to 100,000 operating hours.

Catalogue number logic

HRND95 - □

- □ — Lamp power (W)
- HRND95 — Explosion-proof LED Lightings

Selection table for "ec" type

Type/Ordering code	Lamp power (W)	Weight (kg)	Type/Ordering code	Lamp power (W)	Weight (kg)
HRND95-40 (ec)	40	3.50	HRND95-160 (ec)	160	9.50
HRND95-60 (ec)	60	4.00	HRND95-200 (ec)	200	10.00
HRND95-80 (ec)	80	6.00	HRND95-240 (ec)	240	16.50
HRND95-120 (ec)	120	6.50	HRND95-300 (ec)	300	17.00

Note: 1. Standard products with 60° lens, without lens and 30° lens which are optional, please indicate when placing an order.
2. Standard luminaries do not equip with external lampshade if need, please specify.

Selection table for "nR" type

Type/Ordering code	Lamp power (W)	Weight (kg)	Type/Ordering code	Lamp power (W)	Weight (kg)
HRND95-40 (nR)	40	3.50	HRND95-160 (nR)	160	9.50
HRND95-60 (nR)	60	4.00	HRND95-200 (nR)	200	10.00
HRND95-80 (nR)	80	6.00	HRND95-240 (nR)	240	16.50
HRND95-120 (nR)	120	6.50	HRND95-300 (nR)	300	17.00

Note: 1. Standard products with 60° lens, without lens and 30° lens which are optional, please indicate when placing an order.
2. Standard luminaries do not equip with external lampshade if need, please specify.

Zones 2; 21&22

Technical data

Explosion-proof LED Lightings HRND95-□□

Explosion protection	"ec" type	"nR" type
Global (IECEx)	IECEx NEP 24.0037X	IECEx EUT 18.0002X
Gas and dust	Ex ec mc IIC T□[1] Gc	Ex nR IIC T□[2] Gc
	Ex tb IIIC T□[1] Db	Ex tc IIIC T□[2] Dc
Europe (ATEX)	ATEX (applied for)	EPTI 18 ATEX 0346 X
Gas and dust	Ⓔx II 3 G Ex ec mc IIC T□[1] Gc	Ⓔx II 3 G Ex nR IIC T□[2] Gc
	Ⓔx II 2 D Ex tb IIIC T□[1] Db	Ⓔx II 3 D Ex tc IIIC T□[2] Dc
	[1] See Selection Table 1	[2] See Selection Table 2
Certificates	IECEx; ATEX	IECEx; ATEX
Conformity to standards	EN 60079-0, EN 60079-7, EN 60079-18, EN 60079-31 IEC 60079-0, IEC 60079-7, IEC 60079-18, IEC 60079-31	EN 60079-0, EN 60079-15, EN 60079-31 IEC 60079-0, IEC 60079-15, IEC 60079-31
Material		
Enclosure	Copper-free Aluminium Alloy, powder coated surface,	
Glass cover	Toughened glass, stands 4J impact	
LED driver	Wide voltage input, CC-CV (constant current - constant voltage) output, power factor ≥0.95, with function of distributed current, constant current,surge-proof and anti-electromagnetic interference, and protection against overcurrent, open circuit, and short circuit.	
Exposed fastener	Stainless steel	
Lamp		
Lamp specification	LED module, Multiple LED	
Lamp power (W)	40W, 60W, 80W, 120W, 160W, 200W, 240W, 300W	
Colour rendering index (Ra)	⩾80	
Colour temperature (CCT)	5000K Note: nature white is available in general. Warm white is optional, please specify when ordering.	
Rated voltage	110~277V AC 50/60Hz, 130~250V DC	100~277V AC 50/60Hz, 130~250V DC
Degree of protection	IP66	
Ambient temperature	-40℃~+58℃(+40℃)	-40℃~+55℃(+40℃)
Terminal	3 x 1.5~4mm² (L+N+PE)	
Cable entries	1x M20 x 1.5 cable gland (DQM-I Ex e)	

Selection table 1

Rated power(W)	Temperature classification			
	-40℃⩽Ta⩽+40℃		-40℃⩽Ta⩽+58℃	
	Gas	Dust	Gas	Dust
40, 60, 80, 120, 160, 200, 240, 300	T5	T82℃	T4	T100℃

Selection table 2

Rated power(W)	Temperature classification			
	-40℃⩽Ta⩽+40℃		-40℃⩽Ta⩽+55℃	
	Gas	Dust	Gas	Dust
40, 80	T6	T80℃	T6	T80℃
60, 120, 160, 200, 240, 300			T5	T95℃

LED Light Fittings
HRND95 Series Explosion-proof LED Lightings

Photometric data

Note: Standard products without lens, 30° lens and 60° lens which are optional, please indicate when placing an order.

Lamp power (W)	Luminous flux	Wattage
40W	6400lm	40W
60W	8600lm	60W

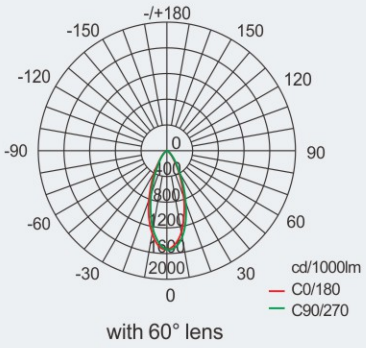

with 60° lens

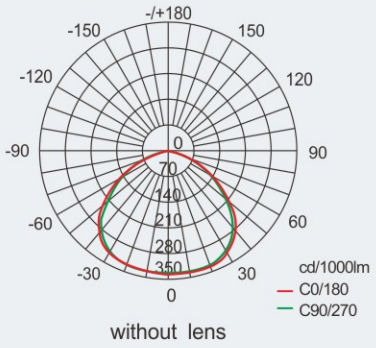

without lens

Lamp power (W)	Luminous flux	Wattage
80W	12000lm	81W
120W	15000lm	122W

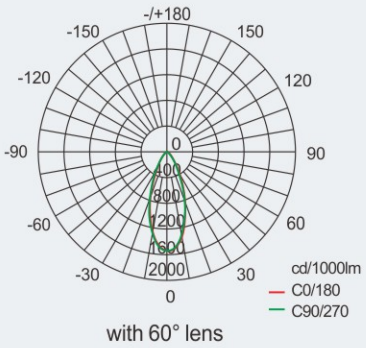

with 60° lens

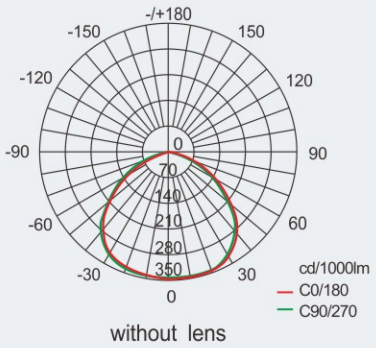

without lens

Lamp power (W)	Luminous flux	Wattage
160W	24000lm	160W
200W	30000lm	198W

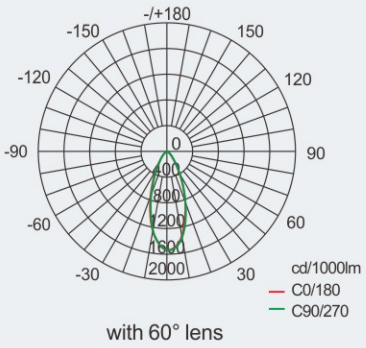

with 60° lens

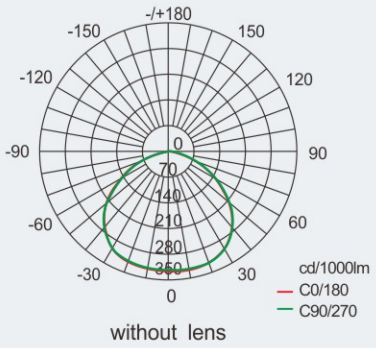

without lens

We can provide lighting design and data by professional lighting software DIALUX based upon simulated site situation on request.

Photometric data

Note: Standard products without lens, 30° lens and 60° lens which are optional, please indicate when placing an order.

Lamp power (W)	Luminous flux	Wattage
240W	37000lm	241W
300W	46000lm	300W

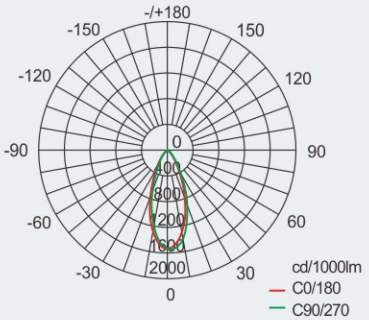

with 60° lens

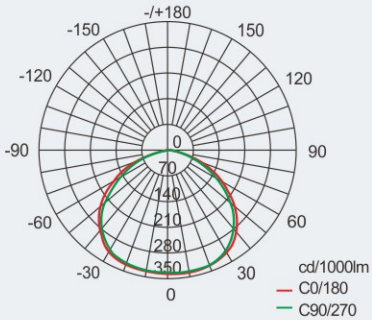

without lens

Dimension drawings

(all dimensions in mm) - subject to alteration

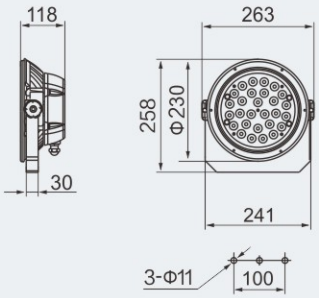

HRND95-40 / HRND95-60

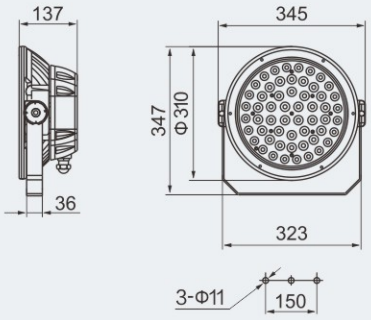

HRND95-80 / HRND95-120

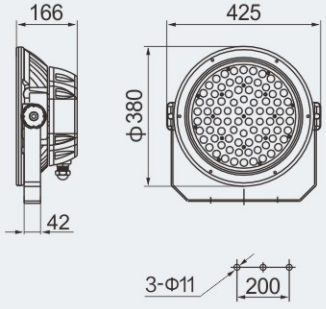

HRND95-160 / HRND95-200

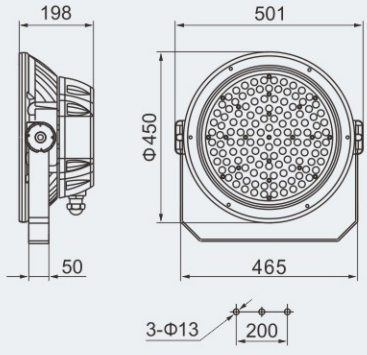

HRND95-240 / HRND95-300

Accessories

Picture	Name	Ordering code	Weight (kg)
	40W/60W Reflector	95001	0.23
	80W/120W Reflector	95002	0.39
	160W/200W Reflector	95003	0.45
	240W/300W Reflector	95004	0.69

LED Light Fittings
HRNT95 Series Explosion-proof LED Floodlights



- Explosion protection to
  - CENELEC
  - IEC
  - NEC
- Can be used in
  Zone 2
  Zone 21 and Zone 22
  Class I, Zone 2
  Class I, Division 2, Groups A, B, C, D
- Applicable lamp and power (max.300W)
  LED: 80W, 120W, 150W, 200W, 240W, 300W
- International brand white light LED, reasonable arrangement of multi LED, high lighting efficiency and long service life.
- Two types of light distribution: spotlight and floodlight, which can be selected on request.
- Standard luminaries equip with 60° lens, 30° lens which is optional, please indicate when placing an order.
- Low-maintenance costs due to long service life, which is up to 100,000 operating hours.

Catalogue number logic

HRNT95 - □

- Lamp power (W)
- Explosion-proof LED Floodlights

Selection table for "ec" type

Type/Ordering code	Lamp power (W)	Weight (kg)	Type/Ordering code	Lamp power (W)	Weight (kg)
HRNT95-80 (ec)	80	5.40	HRNT95-200 (ec)	200	8.00
HRNT95-120 (ec)	120	5.80	HRNT95-240 (ec)	240	8.20
HRNT95-150 (ec)	150	7.50	HRNT95-300 (ec)	300	13.40

Note: 1. Standard products with 60° lens, 30° lens which is optional, please indicate when placing an order.
2. Standard luminaries do not equip with wire guard, if need, please specify.

Selection table for "nR" type

Type/Ordering code	Lamp power (W)	Weight (kg)	Type/Ordering code	Lamp power (W)	Weight (kg)
HRNT95-80 (nR)	80	5.40	HRNT95-240 (nR)	240	8.20
HRNT95-120 (nR)	120	5.80	HRNT95-300 (nR)	300	13.40

Note: 1. Standard products with 60° lens, 30° lens which is optional, please indicate when placing an order.
2. Standard luminaries do not equip with wire guard, if need, please specify.

Zones 2; 21&22

Technical data

Explosion-proof LED floodlights HRNT95-□□

Explosion protection	**"ec" type**	**"nR" type**
Global (IECEx)	IECEx NEP 24.0038X	IECEx EUT 18.0003X
Gas and dust	Ex ec mc IIC T□[1] Gc Ex tb IIIC T□[1] Db	Ex nR IIC T□[2] Gc Ex tc IIIC T□[2] Dc
Europe (ATEX)	ATEx (applied for)	EPTI 18 ATEx 0344X
Gas and dust	Ⓔx II 3 G Ex ec mc IIC T□[1] Gc Ⓔx II 2 D Ex tb IIIC T□[1] Db	Ⓔx II 3 G Ex nR IIC T□[2] Gc Ⓔx II 3 D Ex tc IIIC T□[2] Dc
	[1] See Selection Table 1	[1] See Selection Table 2
Certificates	IECEx; ATEX	IECEx; ATEX
Conformity to standards	EN 60079-0, EN 60079-7, EN 60079-18, EN 60079-31 IEC 60079-0, IEC 60079-7, IEC 60079-18, IEC 60079-31	EN 60079-0, EN 60079-15, EN 60079-31 IEC 60079-0, IEC 60079-15, IEC 60079-31
Material		
Enclosure	Copper-free Aluminium Alloy, powder coated surface,	
Glass cover	Toughened glass, stands 4J impact	
LED driver	Wide voltage input, CC-CV (constant current - constant voltage) output, power factor ≥0.95, with function of distributed current, constant current,surge-proof and anti-electromagnetic interference, and protection against overcurrent, open circuit, and short circuit.	
Exposed fastener	Stainless steel	
Lamp		
Lamp specification	LED module, Multiple LED	
Lamp power (W)	80W, 120W, 150W, 200W, 240W, 300W	80W, 120W, 240W, 300W
Colour rendering index (Ra)	⩾80	
Colour temperature (CCT)	5000K Note: nature white is available in general. Warm white is optional, please specify when ordering.	
Rated voltage	110~277V AC 50/60Hz, 130~250V DC 415V AC 50/60Hz is optional (only for 200W, 300W)	100~277V AC 50/60Hz, 130~250V DC
Degree of protection	IP66	
Ambient temperature	-40℃~+58℃(+40℃)	-40℃~+55℃(+40℃)
Terminal	3 x 1.5~4mm^2 (L+N+PE)	
Cable entries	1x M20 x 1.5 cable gland (DQM-I Ex e)	

Selection table 1

Rated power(W)	Temperature classification			
	-40℃⩽Ta⩽+40℃		-40℃⩽Ta⩽+58℃	
	Gas	Dust	Gas	Dust
80, 120, 150, 200, 240, 300	T5	T82℃	T4	T100℃
200 (415V AC, 50/60Hz)	T5	T88℃	T4	T106℃

Selection table 2

Rated power(W)	Temperature classification			
	-40℃⩽Ta⩽+40℃		-40℃⩽Ta⩽+55℃	
	Gas	Dust	Gas	Dust
80	T6	T80℃	T6	T80℃
120, 240, 300			T5	T95℃

LED Light Fittings
HRNT95 Series Explosion-proof LED Floodlights

Photometric data Note:Standard products with 60° lens, 30° lens which is optional, please indicate when placing an order.

Lamp power (W)	Luminous flux	Wattage
80W	11400lm	80W
120W	17400lm	121W

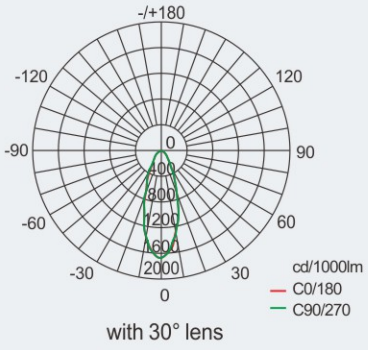

with 30° lens

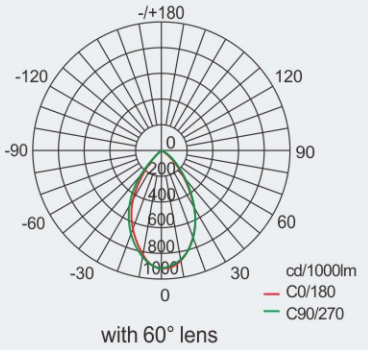

with 60° lens

Lamp power (W)	Luminous flux	Wattage
150W	21000lm	150W
200W	27000lm	200W
240W	33600lm	237W

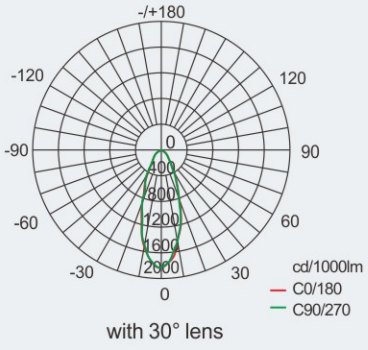

with 30° lens

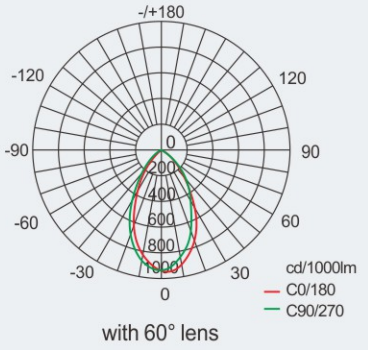

with 60° lens

Lamp power (W)	Luminous flux	Wattage
300W	43000lm	301W

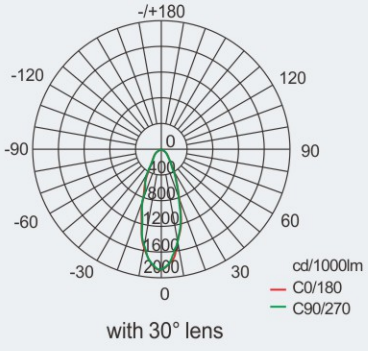

with 30° lens

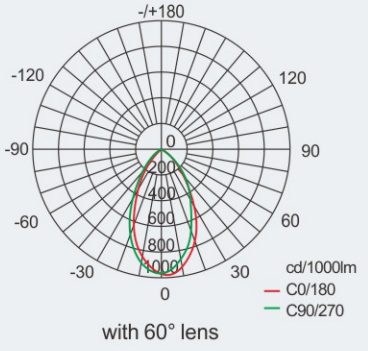

with 60° lens

We can provide lighting design and data by professional lighting software DIALUX based upon simulated site situation on request.

Dimension drawings (all dimensions in mm) - subject to alteration

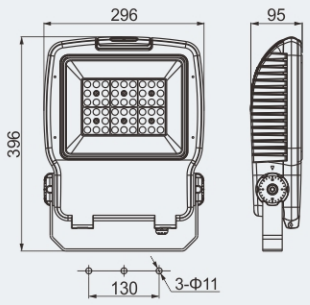

HRNT95-80 / HRNT95-120

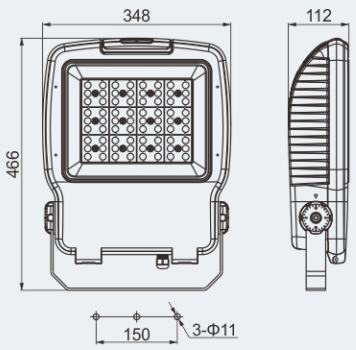

HRNT95-150 / HRNT95-200 / HRNT95-240

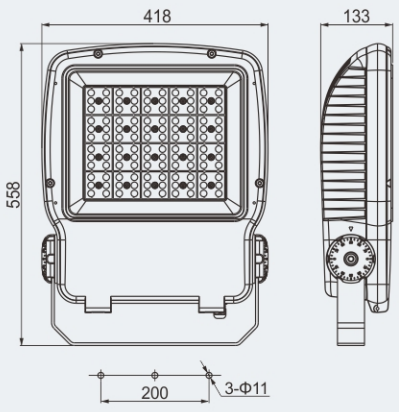

HRNT95-300

Accessories

Picture	Name	Ordering code	Weight (kg)
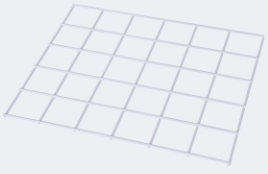	80W/120W Wire guard	95008	0.30
	150W/200W/240W Wire guard	95009	0.40
	300W Wire guard	95010	0.55

LED Light Fittings
HRT97 Series Explosion-proof LED Floodlights

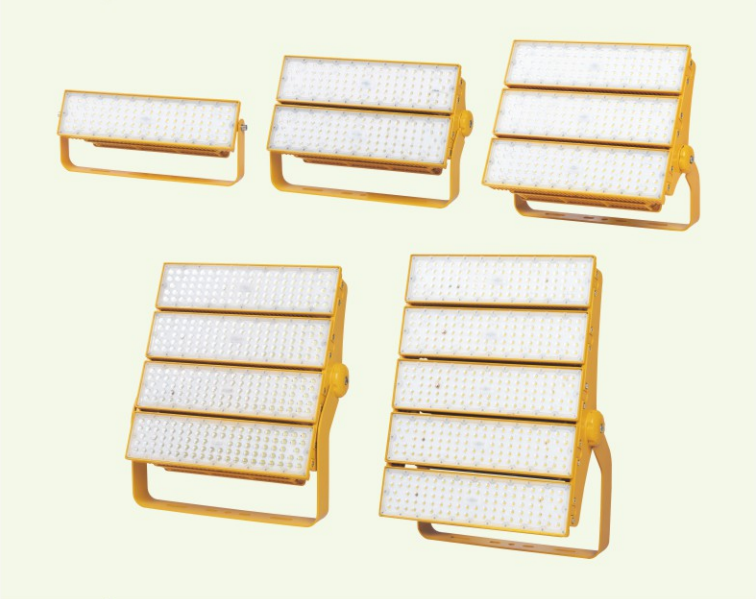

- Explosion protection to
  - CENELEC
  - IEC
  - NEC
- Can be used in
  Zone 2
  Zone 21 and Zone 22
  Class I, Zone 2
  Class I, Division 2, Groups A, B, C, D
- Applicable lamp and power (max.1000W)
  LED: 200W, 400W, 600W, 800W, 1000W
- International brand white light LED, reasonable arrangement of multi LED, high lighting efficiency and long service life.
- Two types of light distribution: spotlight and floodlight, which can be selected on request.
- Standard luminaries equip with 60° lens, 30° lens which is optional, please indicate when placing an order.
- Low-maintenance due to long service life is up to 100,000 operating hours.
  Low-maintenance costs due to long service life, which is up to 100,000 operating hours.

Catalogue number logic

HRT97 - □

- □ — Lamp power (W)
- HRT97 — Explosion-proof LED Floodlights

Selection table

Type/Ordering code	Lamp power (W)	Weight (kg)	Type/Ordering code	Lamp power (W)	Weight (kg)
HRT97-200	200	4.50	HRT97-800	800	19.00
HRT97-400	400	9.60	HRT97-1000	1000	23.40
HRT97-600	600	13.60			

Note: 1. Standard products with 60° lens, 30° lens which is optional, please indicate when placing an order.
2. Standard luminaries do not equip with wire guard, if need, please specify.

Zones 2; 21&22

Technical data

Explosion-proof LED floodlights HRT97-□

Explosion protection	
Global (IECEx)	IECEx (applied for)
Gas and dust	Ex ec mc IIC T4/T3 Gc Ex tb IIIC T130℃/T195℃ Db
Europe (ATEX)	ATEx (applied for)
Gas and dust	Ⓔx II 3 G Ex ec mc IIC T4/T3 Gc Ⓔx II 2 D Ex tb IIIC T130℃/T195℃ Db
Certificates	IECEx; ATEX
Conformity to standards	EN 60079-0, EN 60079-7, EN 60079-18, EN 60079-31 IEC 60079-0, IEC 60079-7, IEC 60079-18, IEC 60079-31
Material	
Enclosure	Copper-free Aluminium Alloy, powder coated surface,
Glass cover	Polycarbonate, stands 4J impact
LED driver	Wide voltage input, CC-CV (constant current - constant voltage) output, power factor ≥0.95, with function of distributed current, constant current,surge-proof and anti-electromagnetic interference, and protection against overcurrent, open circuit, and short circuit.
Exposed fastener	Stainless steel
Lamp	
Lamp specification	LED module, Multiple LED
Lamp power (W)	200W, 400W, 600W, 800W, 1000W
Colour rendering index (Ra)	⩾80
Colour temperature (CCT)	5000K Note: nature white is available in general. Warm white is optional, please specify when ordering.
Rated voltage	100~277V AC 50/60Hz, 150~250V DC
Degree of protection	IP66
Ambient temperature	T4/T130℃ for tamb: -60℃~+40℃ T3/T195℃ for tamb: -60℃~+60℃
Terminal	3 x 1.5~6mm^2 (L+N+PE)
Cable entries	1x M20 x 1.5 cable gland (DQM-I Ex e)(M25 x 1.5 is optional)

Photometric data

Note:Standard products with 60° lens, 30° lens which is optional, please indicate when placing an order.

Lamp power (W)	Luminous flux	Wattage
200W	29000lm	193W

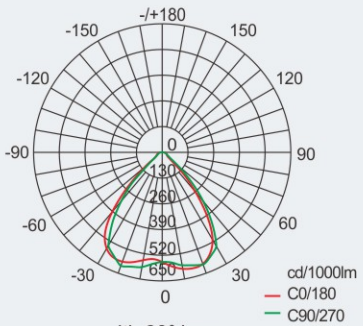

with 60° lens

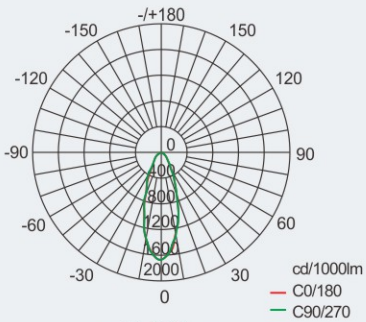

with 30° lens

We can provide lighting design and data by professional lighting software DIALUX based upon simulated site situation on request.

Photometric data

Note:Standard products with 60° lens, 30° lens which is optional, please indicate when placing an order.

Lamp power (W)	Luminous flux	Wattage
400W	58000lm	383W

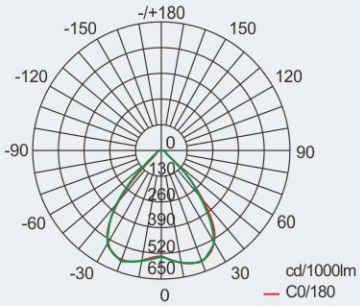

with 60° lens

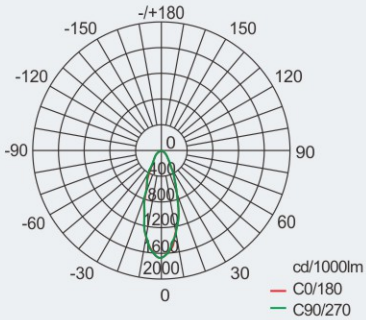

with 30° lens

Lamp power (W)	Luminous flux	Wattage
600W	88000lm	590W

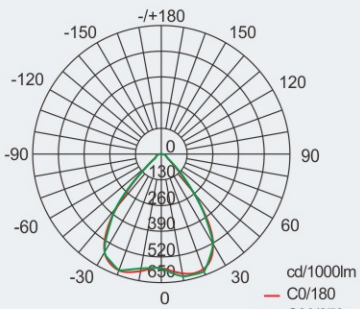

with 60° lens

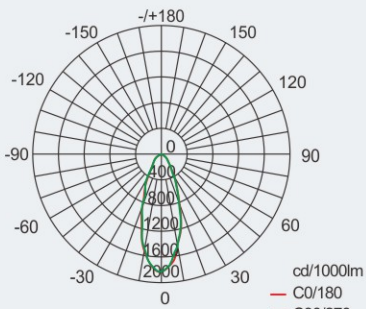

with 30° lens

Lamp power (W)	Luminous flux	Wattage
800W	112000lm	779W

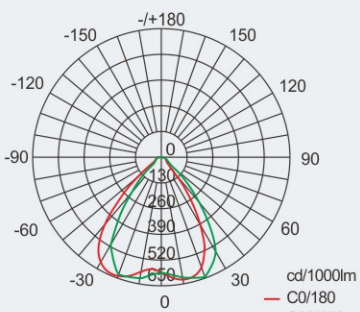

with 60° lens

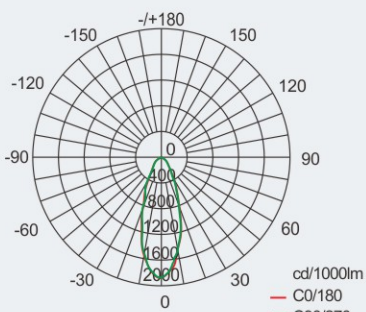

with 30° lens

We can provide lighting design and data by professional lighting software DIALUX based upon simulated site situation on request.

Photometric data

Note:Standard products with 60° lens, 30° lens which is optional, please indicate when placing an order.

Lamp power (W)	Luminous flux	Wattage
1000W	145000lm	979W

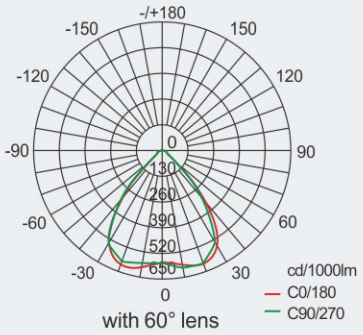

with 60° lens

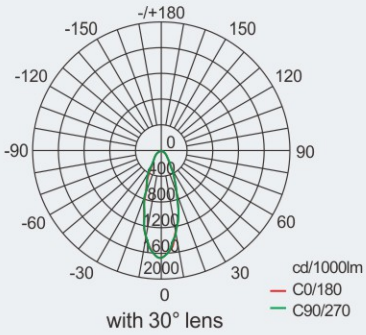

with 30° lens

We can provide lighting design and data by professional lighting software DIALUX based upon simulated site situation on request.

Dimension drawings (all dimensions in mm) - subject to alteration

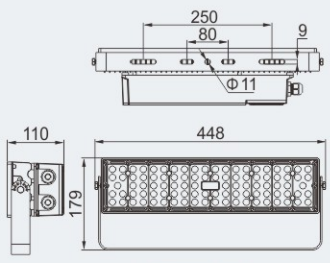

HRT97-200

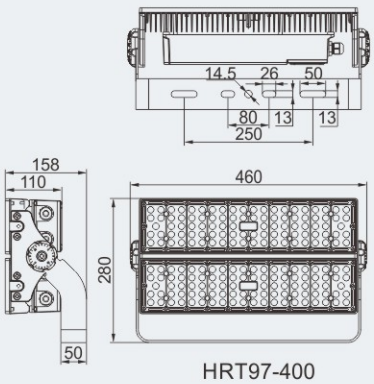

HRT97-400

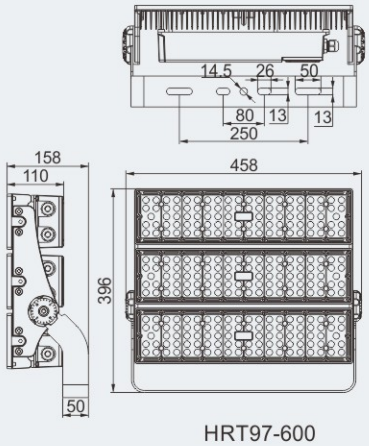

HRT97-600

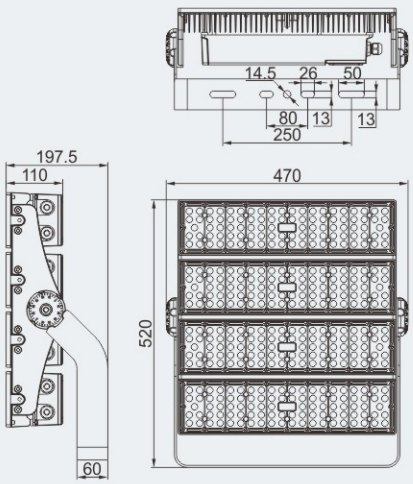

HRT97-800

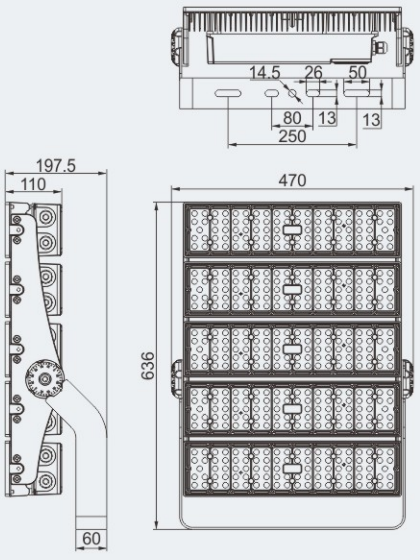

HRT97-1000

LED Light Fittings
HRT99 Series Explosion-proof LED Floodlights



- Explosion protection to
  - CENELEC
  - IEC
  - NEC
- Can be used in
  Zone 1 and Zone 2
  Zone 21 and Zone 22
  Class I, Zone 1 and Zone 2
  Class I, Division 2, Groups A, B, C, D
- Applicable lamp and power (max.240W)
  LED: 80W, 100W, 120W, 160W, 200W, 240W
- International brand white light LED, reasonable arrangement of multi LED, high lighting efficiency and long service life.
- Low-maintenance costs due to long service life, which is up to 100,000 operating hours.

Catalogue number logic

HRT99 - □ □

- Mounting: B: Bracket type / M: Street light type
- Lamp power (W)
- Explosion-proof LED Floodlights

Selection table

Type/Ordering code	Lamp power (W)	Weight (kg)	Type/Ordering code	Lamp power (W)	Weight (kg)
HRT99-80	80	3.90	HRT97-160	160	7.60
HRT99-100	100	3.90	HRT97-200	200	7.60
HRT99-120	120	3.90	HRT97-240	240	7.60

Zones 1&2; 21&22

Technical data

Explosion-proof LED floodlights HRT99-□

Explosion protection	
Global (IECEx)	IECEx (applied for)
Gas and dust	Ex db eb IIC T6/T5 Gb Ex tb IIIC T80℃/T95℃ Db
Europe (ATEX)	ATEx (applied for)
Gas and dust	Ⓔx II 2 G Ex db eb IIC T6/T5 Gb Ⓔx II 2 D Ex tb IIIC T80℃/T95℃ Db
Certificates	IECEx; ATEX
Conformity to standards	EN 60079-0, EN 60079-1, EN 60079-7, EN 60079-31 IEC 60079-0, IEC 60079-1, IEC 60079-7, IEC 60079-31
Material	
Enclosure	Copper-free Aluminium Alloy, powder coated surface,
Glass cover	Toughened glass, stands 4J impact
LED driver	Wide voltage input, CC-CV (constant current - constant voltage) output, power factor ≥0.95, with function of distributed current, constant current,surge-proof and anti-electromagnetic interference, and protection against overcurrent, open circuit, and short circuit.
Exposed fastener	Stainless steel
Lamp	
Lamp specification	LED module, Multiple LED
Lamp power (W)	80W, 100W, 120W, 160W, 200W, 240W
Colour rendering index (Ra)	⩾80
Colour temperature (CCT)	5700K Note: nature white is available in general. Warm white is optional, please specify when ordering.
Rated voltage	220~240V AC 50/60Hz 24~48V DC (80W, 100W, 120W)
Degree of protection	IP66
Ambient temperature	T6/T80℃ for tamb: -40℃~+40℃ T5/T95℃ for tamb: -40℃~+60℃
Terminal	3 x 1.5~6mm^2 (L+N+PE)
Cable entries	1x M20 x 1.5 cable gland (DQM-I Ex e)(M25 x 1.5 is optional)

Dimension drawings (all dimensions in mm) - subject to alteration

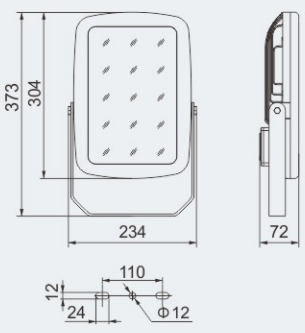

80W, 100W, 120W

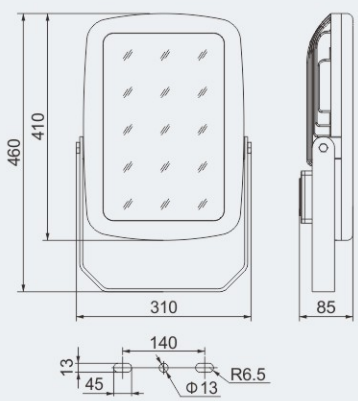

160W, 200W, 240W

LED Light Fittings
HRT99 Series Explosion-proof LED Floodlights

Photometric data Note:Standard products with 60° lens, 30° lens which is optional, please indicate when placing an order.

Lamp power (W)	Luminous flux	Wattage
80W	9100lm	76W

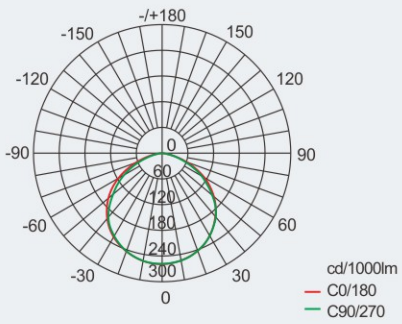

Lamp power (W)	Luminous flux	Wattage
100W	12000lm	105W

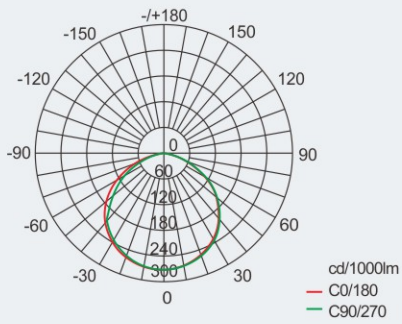

Lamp power (W)	Luminous flux	Wattage
120W	13300lm	115W

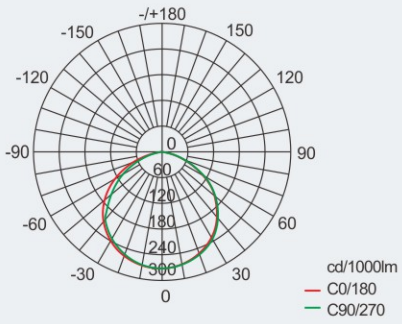

Lamp power (W)	Luminous flux	Wattage
160W	18000lm	155W

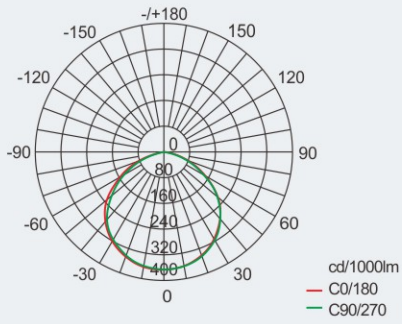

Lamp power (W)	Luminous flux	Wattage
200W	23000lm	200W

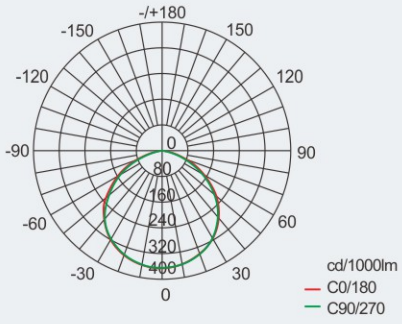

Lamp power (W)	Luminous flux	Wattage
240W	26500lm	238W

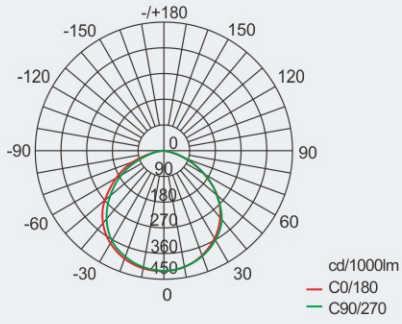

We can provide lighting design and data by professional lighting software DIALUX based upon simulated site situation on request.

Mounting type (all dimensions in mm) – subject to alteration

B: Bracket type

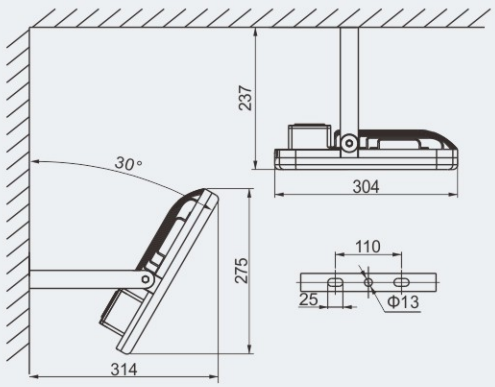

Type I (80W,100W,120W)

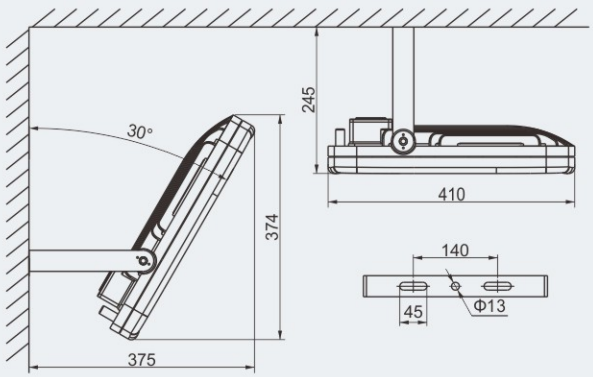

Type II (160W,200W,240W)

M: Street light type

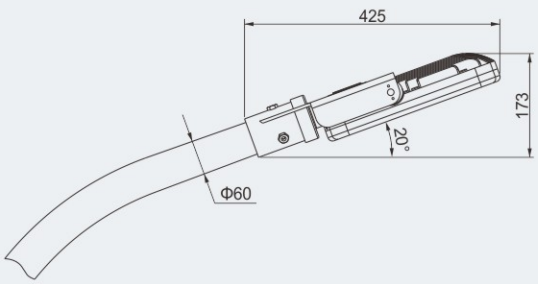

Type I (80W,100W,120W)

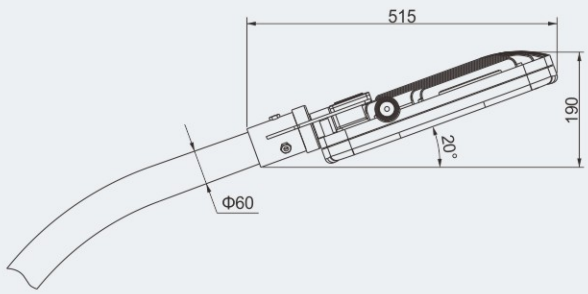

Type II (160W,200W,240W)

Pendant Light Fittings
HRD61 Series Explosion-proof Light Fittings



- Explosion protection to
  -CENELEC
  -IEC
  -NEC
- Can be used in
  Zone 1 and Zone 2
  Zone 21 and Zone 22
  Class I, Zone 1 and Zone 2
  Class I, Division 1, Groups A, B, C, D
- Available lamp (max. 400W)
  -Metal halide lamp (HIE)
  -High pressure mercury lamp (HME)
  -High pressure sodium lamp (HSE)
- Three enclosure types: 150, 250, 400.
- Integral control gear, easy installation and maintenance.
- Explosion-proof trigger, rapid starting, stable performance and long service life.
- Wireless connection between body and top cover, easy installation and maintenance.
- Powder coated wire guard, white.
- Toughened glass cover resistant to temperature changes.

Catalogue number logic

HRD61-□ -□ □ □

- Mounting
  - D: hook type
  - G: pendant pole type
  - B: wall type
  - X: ceiling type
  - L: pole type
- Lamp power (W)
- Lamp
  - HIE: Metal halide lamp
  - HSE: High pressure sodium lamp
  - HME: High pressure mercury lamp
- Enclosure type: 150, 250, 400
- Explosion-proof light fittings

Selection table

Type/Ordering code	Available lamp power (W)			Lamp holder
	HIE	HSE	HME	
HRD61-150	70, 100, 150	70, 100	80, 125	E27
HRD61-250	250	150, 250	250	E40
HRD61-400	400	400	400	E40

Note

1. The light fittings are supplied without lamp. PHILIPS lamps are recommended.
2. HPI European standard ballast is supplied with HIE light fitting. HPI European standard lamps are recommended.
3. The light fittings are supplied without external reflector. Please specify when ordering.

Zones 1&2; 21&22

Technical data

Explosion-proof light fittings	HRD61-150-□□□
Explosion protection	
Global (IECEx)	IECEx CQM 11.0010X
Gas and dust	Ex db IIC T4 or T3 Gb Ex tb IIIC T130℃ or T190℃ Db IP66
Europe (ATEX)	TÜV CY 20 ATEX 0206281 X
Gas and dust	Ⓔx II 2 G Ex db IIC T4 or T3 Gb Ⓔx II 2 D Ex tb IIIC T130℃ or T190℃ Db
Certificates	IECEx; ATEX
Conformity to standards	EN 60079-0, EN 60079-1, EN 60079-31 IEC 60079-0, IEC 60079-1, IEC 60079-31
Material	
Enclosure	Copper-free Aluminium Alloy, powder coated surface, yellow (RAL1021)
Wire guard	Stainless steel
Transparent cover	Toughened glass, stands 4J impact
Ballast	Electromagnetic ballast, rapid starting, stable performance
Trigger	Explosion-proof trigger
Power factor	COSΦ ≥0.90 (compensated)
Internal reflector	High-purity aluminium
External reflector(optional)	Pure aluminium, anodic-oxidation treatment for surface
Exposed fastener	Stainless steel
Lamp	
Lamp holder	E27
Available lamp and lamp power (W)	Metal halide lamp (HIE): 70W, 100W, 150W High pressure mercury lamp (HME): 80W, 125W High pressure sodium lamp (HSE): 70W, 100W Note: HPI European standard ballast is available in general
Rated voltage	220~240V AC 50Hz (60Hz is optional)
Earthing protection	M5 (internal & external earth bolts)
Degree of protection	IP66
Ambient temperature	T4 or T130℃ for Tamb: -60℃~+40℃ (HIE, HME) T3 or T190℃ for Tamb: -60℃~+55℃ (HIE, HME) T4 or T130℃ for Tamb: -60℃~+55℃ (HSE)
Terminal	3 x 1.5~4mm^2 (L+N+PE)
Cable entries	1 x G3/4" (pendant pole type and hook type); 4 x M25x1.5 (wall type and ceiling type); 1 x G1"(pole type)
Cable gland	See Mounting type
Available cable outer diameter	Φ10~Φ14 (mm)

Mounting type (all dimensions in mm) – subject to alteration

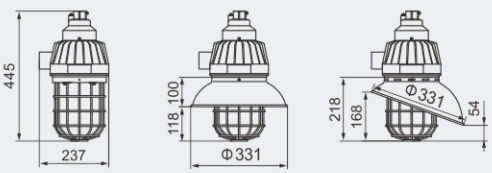

G: pendant pole type

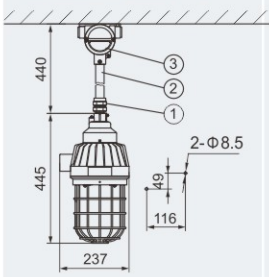

Weight: 10.35kg
Accessories supplied with the light fittings:
①.BGJ-III explosion-proof connector G3/4" (M)/M25 x 1.5 (F), Stainless steel.
②.Straight pipe (M25 x 1.5), length: 300mm.
③.BHD51-F (Ex d IIC, copper-free aluminium), see P3/4.

D: hook type

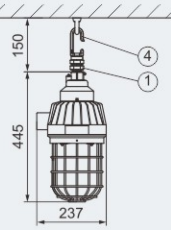

Weight: 9.30kg
Accessories supplied with the light fittings:
①.BGJ-III explosion-proof connector G3/4" (M)/M25 x 1.5 (F), Stainless steel.
④. Hook (Stainless steel)

X: ceiling type

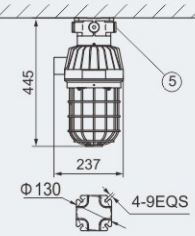

Weight: 9.45kg
Accessories supplied with the light fittings:
⑤.4 x M25 x1.5 Plugs; Ex d cable gland (optional): DQM-II (Ex d) or DQM-III (Ex d) is recommended.
Please see P7/22~31.

B: wall type

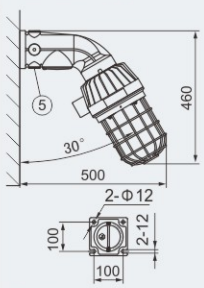

Weight: 11.20kg
Accessories supplied with the light fittings:
⑤.4 x M25 x1.5 Plugs; Ex d cable gland (optional): DQM-II (Ex d) or DQM-III (Ex d) is recommended.
Please see P7/22~31.

L: pole type

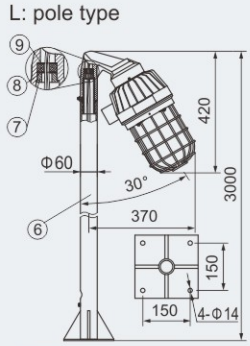

Weight: 9.70kg
Accessories supplied with the light fittings:
⑥.Pole shall be provided by user.
⑦.Locking bolt, 1No.
⑧.Washer, 2 Nos.
⑨.Seal ring, 1No.

Photometric data

HRD61-150-□□□(Without external reflector)



Rated luminous flux
70W High pressure sodium lamp: 6600 lm
100W High pressure sodium lamp: 10200 lm
70W Metal halide lamp: 5800 lm
100W Metal halide lamp: 8700 lm
150W Metal halide lamp: 13500 lm
80W High pressure mercury lamp: 3800 lm
125W High pressure mercury lamp: 6300 lm
The data from Philips lamp

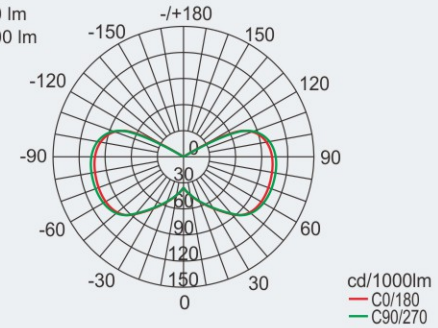

HRD61-150-□□□(With wide reflector)



Rated luminous flux
70W High pressure sodium lamp: 6600 lm
100W High pressure sodium lamp: 10200 lm
70W Metal halide lamp: 5800 lm
100W Metal halide lamp: 8700 lm
150W Metal halide lamp: 13500 lm
80W High pressure mercury lamp: 3800 lm
125W High pressure mercury lamp: 6300 lm
The data from Philips lamp

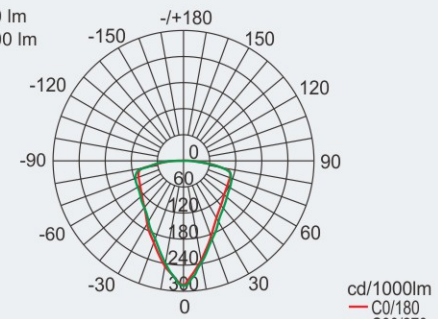

HRD61-150-□□□(With angle reflector)



Rated luminous flux
70W High pressure sodium lamp: 6600 lm
100W High pressure sodium lamp: 10200 lm
70W Metal halide lamp: 5800 lm
100W Metal halide lamp: 8700 lm
150W Metal halide lamp: 13500 lm
80W High pressure mercury lamp: 3800 lm
125W High pressure mercury lamp: 6300 lm
The data from Philips lamp

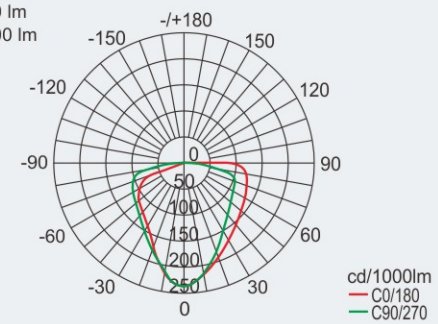

We can provide lighting design and data by professional lighting software DIALUX based upon simulated site situation on request.

Technical data

Explosion-proof light fittings	HRD61-250-□□□
Explosion protection	
Global (IECEx)	IECEx CQM 07.0003X
Gas and dust	Ex d IIC T3 Gb Ex tb IIIC T190℃ Db IP66
Europe (ATEX)	TÜV CY 18 ATEX 0206012 X
Gas and dust	Ⓔx II 2 G Ex db IIC T3 Gb Ⓔx II 2 D Ex tb IIIC T190℃ Db IP66
Certificates	IECEx; ATEX
Conformity to standards	EN 60079-0, EN 60079-1, EN 60079-31 IEC 60079-0, IEC 60079-1, IEC 60079-31
Material	
Enclosure	Copper-free Aluminium Alloy, powder coated surface, yellow (RAL1021)
Wire guard	Stainless steel
Transparent cover	Toughened glass, stands 4J impact
Ballast	Electromagnetic ballast, rapid starting, stable performance
Trigger	Explosion-proof trigger
Power factor	COSΦ ≥0.90 (compensated)
Internal reflector	High-purity aluminium
External reflector(optional)	Pure aluminium, anodic-oxidation treatment for surface
Exposed fastener	Stainless steel
Lamp	
Lamp holder	E40
Available lamp and lamp power (W)	Metal halide lamp (HIE): 250W High pressure mercury lamp (HME): 250W High pressure sodium lamp (HSE): 150W, 250W Note: HPI European standard ballast is available in general
Rated voltage	220~240V AC 50Hz (60Hz is optional)
Earthing protection	M5 (internal & external earth bolts)
Degree of protection	IP66
Ambient temperature	-20℃~+55℃
Terminal	3 x 1.5~4mm² (L+N+PE)
Cable entries	1 x G3/4" (pendant pole type and hook type); 4 x M25x1.5 (wall type and ceiling type); 1 x G1"(pole type)
Cable gland	See Mounting type
Available cable outer diameter	Φ10~Φ14 (mm)

Mounting type (all dimensions in mm) – subject to alteration

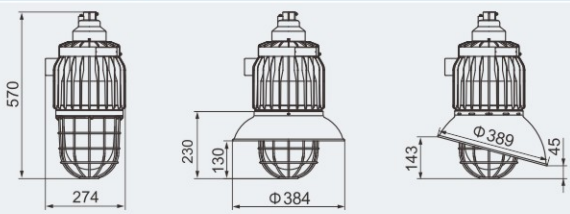

G: pendant pole type

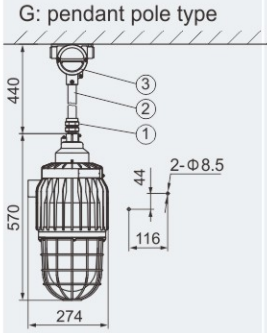

Weight: 17.20kg
Accessories supplied with the light fittings:
①.BGJ-III explosion-proof connector G3/4〞(M)/M25 x 1.5 (F), Stainless steel.
②.Straight pipe (M25 x 1.5), length: 300mm.
③.BHD51-F (Ex d IIC, cast iron), see P3/4.

D: hook type

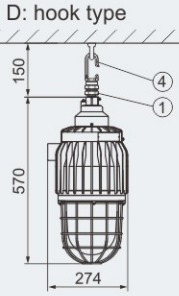

Weight: 14.55kg
Accessories supplied with the light fittings:
①.BGJ-III explosion-proof connector G3/4〞(M)/M25 x 1.5 (F), Stainless steel.
④. Hook (Stainless steel)

X: ceiling type

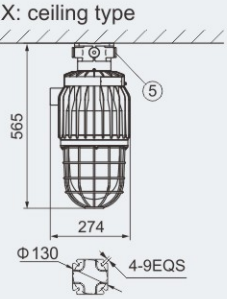

Weight: 15.20kg
Accessories supplied with the light fittings:
⑤.4 x M25 x1.5 Plugs; Ex d cable gland (optional): DQM-II (Ex d) or DQM-III (Ex d) is recommended.
Please see P7/22~31.

B: wall type

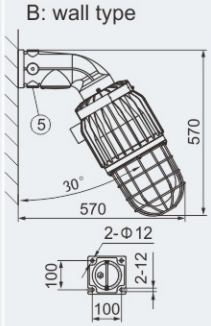

Weight: 16.95kg
Accessories supplied with the light fittings:
⑤.4 x M25 x1.5 Plugs; Ex d cable gland (optional): DQM-II (Ex d) or DQM-III (Ex d) is recommended.
Please see P7/22~31.

L: pole type

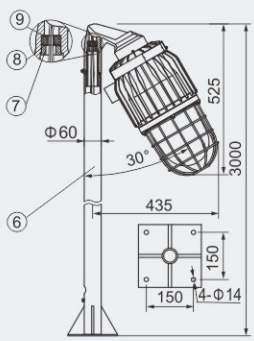

Weight: 15.50kg
Accessories supplied with the light fittings:
⑥.Pole shall be provided by user.
⑦.Locking bolt, 1 No.
⑧.Washer, 2 Nos.
⑨.Seal ring, 1No.

Photometric data

HRD61-250-□□□(Without external reflector)



Rated luminous flux
150W High pressure sodium lamp: 18000 lm
250W High pressure sodium lamp: 33200 lm
250W Metal halide lamp: 23200 lm
250W High pressure mercury lamp: 13000 lm
The data from Philips lamp

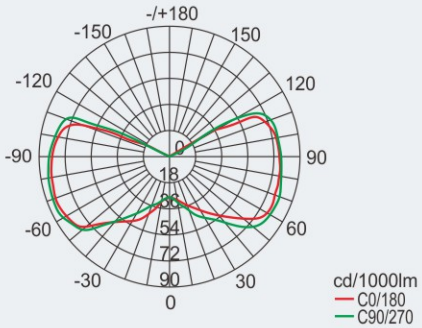

HRD61-250-□□□(With wide reflector)



Rated luminous flux
150W High pressure sodium lamp: 18000 lm
250W High pressure sodium lamp: 33200 lm
250W Metal halide lamp: 23200 lm
250W High pressure mercury lamp: 13000 lm
The data from Philips lamp

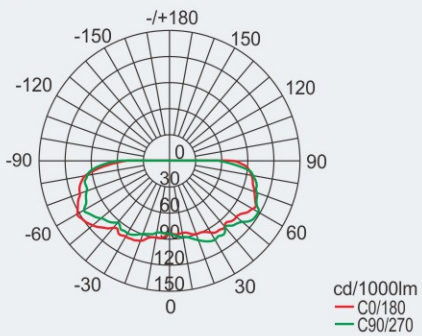

HRD61-250-□□□(With angle reflector)



Rated luminous flux
150W High pressure sodium lamp: 18000 lm
250W High pressure sodium lamp: 33200 lm
250W Metal halide lamp: 23200 lm
250W High pressure mercury lamp: 13000 lm
The data from Philips lamp

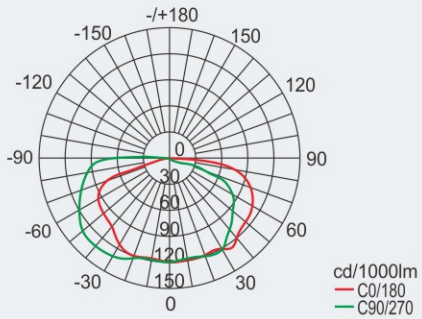

We can provide lighting design and data by professional lighting software DIALUX based upon simulated site situation on request.

Technical data

Explosion-proof light fittings	HRD61-400-□□□
Explosion protection	
Global (IECEx)	IECEx CQM 08.0004; CU-TR
Gas and dust	Ex d IIC T3 Gb Ex tb IIIC T194℃ Db IP66
Europe (ATEX)	TÜV CY 18 ATEX 0206013 X
Gas and dust	Ⓔx II 2 G Ex db IIC T3 Gb Ⓔx II 2 D Ex tb IIIC T194℃ Db IP66
Certificates	IECEx; ATEX
Conformity to standards	EN 60079-0, EN 60079-1, EN 60079-31 IEC 60079-0, IEC 60079-1, IEC 60079-31
Material	
Enclosure	Copper-free Aluminium Alloy, powder coated surface, yellow (RAL1021)
Wire guard	Stainless steel
Transparent cover	Toughened glass, stands 4J impact
Ballast	Electromagnetic ballast, rapid starting, stable performance
Trigger	General trigger
Power factor	COSφ ≥0.90 (compensated)
Internal reflector	High-purity aluminium
External reflector(optional)	Pure aluminium, anodic-oxidation treatment for surface
Exposed fastener	Stainless steel
Lamp	
Lamp holder	E40
Available lamp and lamp power (W)	Metal halide lamp (HIE): 400W High pressure mercury lamp (HME): 400W High pressure sodium lamp (HSE): 400W Note: HPI European standard ballast is available in general
Rated voltage	220~240V AC 50Hz (60Hz is optional) 208V, 250V, 277V AC 50Hz (60Hz is optional)
Earthing protection	M5 (internal & external earth bolts)
Degree of protection	IP66
Ambient temperature	-20℃~+55℃
Terminal	3 x 1.5~4mm² (L+N+PE)
Cable entries	1 x G3/4" (pendant pole type and hook type); 4 x M25x1.5 (wall type and ceiling type); 1 x G1"(pole type)
Cable gland	See Mounting type
Available cable outer diameter	Φ10~Φ14 (mm)

Mounting type (all dimensions in mm) – subject to alteration

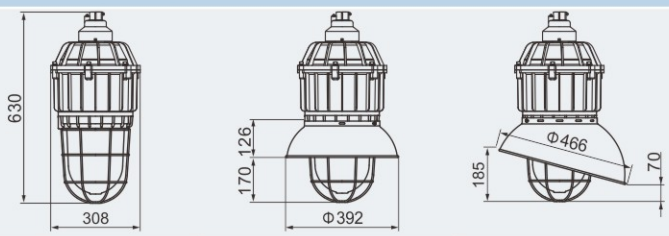

G: pendant pole type

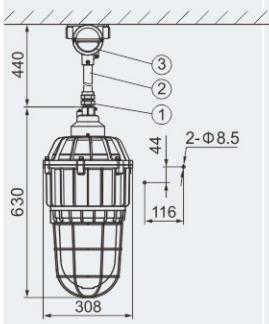

Weight: 23.65kg
Accessories supplied with the light fittings:
①.BGJ-III explosion-proof connector G3/4" (M)/M25 x 1.5 (F), Stainless steel.
②.Straight pipe(M25 x 1.5), length: 300mm.
③.BHD51-F (Ex d IIC, cast iron), see P3/4.

D: hook type

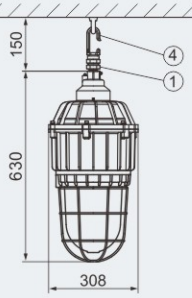

Weight: 20.85kg
Accessories supplied with the light fittings:
①.BGJ-III explosion-proof connector G3/4" (M)/M25 x 1.5 (F), Stainless steel.
④. Hook (Stainless steel)

X: ceiling type

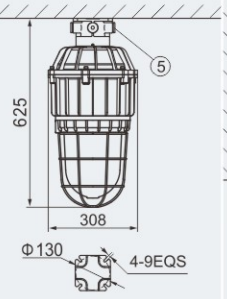

Weight: 21.50kg
Accessories supplied with the light fittings:
⑤.4 x M25 x1.5 Plugs; Ex d cable gland (optional): DQM-II (Ex d) or DQM-III (Ex d) is recommended.
Please see P7/22~31.

B: wall type

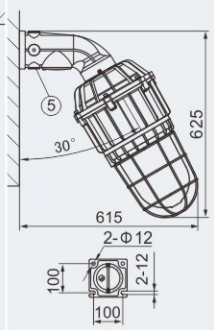

Weight: 23.25kg
Accessories supplied with the light fittings:
⑤.4 x M25 x1.5 Plugs; Ex d cable gland (optional): DQM-II (Ex d) or DQM-III (Ex d) is recommended.
Please see P7/22~31.

L: pole type

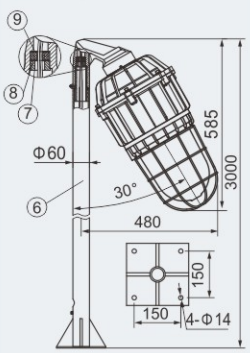

Weight: 21.80kg
Accessories supplied with the light fittings:
⑥.Pole shall be provided by user.
⑦.Locking bolt, 1 No.
⑧.Washer, 2 Nos.
⑨.Seal ring, 1 No.

Photometric data

HRD61-400-□□□(Without external reflector)



Rated luminous flux
400W Metal halide lamp: 42000 lm
400W High pressure sodium lamp: 56500 lm
400W High pressure mercury lamp: 22000 lm
The data from Philips lamp

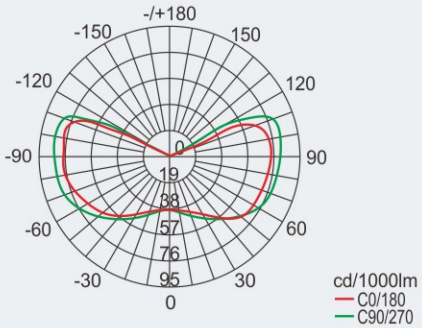

HRD61-400-□□□(With wide reflector)



Rated luminous flux
400W Metal halide lamp: 42000 lm
400W High pressure sodium lamp: 56500 lm
400W High pressure mercury lamp: 22000 lm
The data from Philips lamp

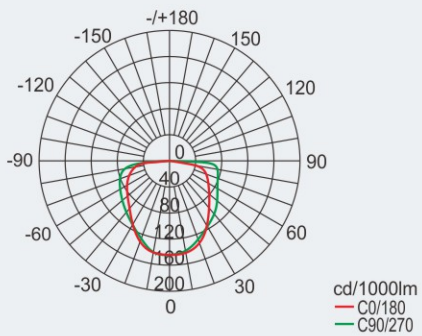

HRD61-400-□□□(With angle reflector)



Rated luminous flux
400W Metal halide lamp: 42000 lm
400W High pressure sodium lamp: 56500 lm
400W High pressure mercury lamp: 22000 lm
The data from Philips lamp

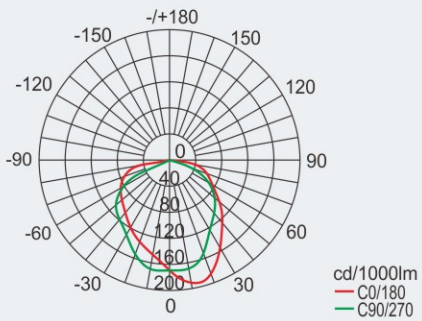

We can provide lighting design and data by professional lighting software DIALUX based upon simulated site situation on request.

Accessories

Picture	Name	Ordering code	Weight (kg)
	150 Wide reflector	61001	0.15
	250 Wide reflector	61002	0.27
	400 Wide reflector	91003	0.45
	150 Angle reflector	61004	0.15
	250 Angle reflector	61005	0.36
	400 Angle reflector	71004	0.57
	Hook	61020	0.20
	Explosion-proof electronic trigger (For HRD61-150 type, HRD61-250 type)	61034	0.34

Note: Ballast, capacitor, 400 type trigger see P1/21

Power connection lamp replacement



- Unscrew lock bolt at top cover, remove top cover and circlip, and take terminal block out.
- Connect the cable to terminal block, put terminal block and cirlip back to ensure proper connection.



- Screw top cover at light fitting, keep two arrows on two parts in line to ensure proper connection between two spring contact plates.



- Unscrew bolts at transparent cover, open the transparent cover and screw lamp into lamp holder. Close cover and screw bolts.

Pendant Light Fittings
BDD81 Series Explosion-proof Lightings



- Explosion protection to
  -CENELEC
  -IEC
  -NEC
- Can be used in
  Zone 1 and Zone 2
  Zone 21 and Zone 22
  Class I, Zone 1 and Zone 2
  Class I, Division 1, Groups A, B, C, D
- Available lamp and power:
  Incandescent lamp: 25W, 40W, 60W, 100W
  Energy-saving lamp: 9W, 11W
  LED lamp: 3W, 5W, 8W
- Enclosure in Copper-free Aluminium Alloy, powder coated surface, yellow (RAL1021).
- The light fittings are supplied without lamp source. PHILIPS lamps are recommended.

Catalogue number logic

BDD81 - □ □ □

- Mounting
  - H: portable type
  - X: ceiling type
  - G: pendant pole type
- Lamp power (W)
- Lamp
  - A: Incandescent lamp
  - ESL: Energy-saving lamp
  - LED: LED lamp
- Explosion-proof lightings

Mounting type (all dimensions in mm) – subject to alteration

Installation reference

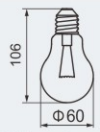

100W Incandescent lamp



11W Energy-saving lamp

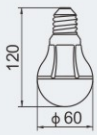

8W LED

H: portable type

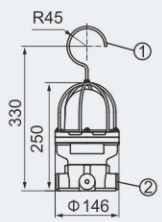

Weight: 2.70kg
Accessories supplied with the light fittings:
①.Hook
②.4 x M25 x1.5 Plug; Ex d cable gland (optional): DQM-II (Ex d) or DQM-III (Ex d) is recommended. Please see P7/22~31.

X: ceiling type

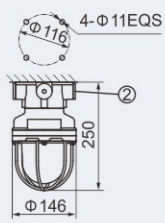

Weight: 2.50kg
Accessories supplied with the light fittings:
②.4 x M25 x1.5 Plug; Ex d cable gland (optional): DQM-II (Ex d) or DQM-III (Ex d) is recommended. Please see P7/22~31.

G: pendant pole type

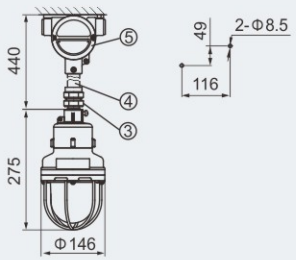

Weight: 4.50kg
Accessories supplied with the light fittings:
③.BGJ-III explosion-proof connector M25 x 1.5(M)/M25 x 1.5(F), Stainless steel.
④.Straight pipe(M25 x 1.5), length: 300mm.
⑤.BHD51-F (Ex d IIC, Copper-free Aluminium Alloy), see P3/4.

Zones 1&2; 21&22

Technical data

Explosion-proof lightings	BDD81-□□□
Explosion protection	
Global (IECEx)	IECEx CQM 12.0036X
Gas and dust	Ex d IIC T4 Gb
	Ex t IIIC T130℃ Db IP66
Europe (ATEX)	LCIE 11 ATEX 3110X
Gas and dust	Ⓔx II 2 G Ex d IIC T4 Gb
	Ⓔx II 2 D Ex t IIIC T130℃ Db IP66
Certificates	IECEx; ATEX
Conformity to standards	EN 60079-0, EN 60079-1, EN 60079-31
	IEC 60079-0, IEC 60079-1, IEC 60079-31
Material	
Enclosure	Copper-free Aluminium Alloy, powder coated surface, yellow (RAL1021)
Transparent cover	Toughened glass, stands 4J impact
Wire guard	Stainless steel
Exposed fastener	Stainless steel
Lamp	
Lamp holder	E27
Available lamp and lamp power (W)	Incandescent lamp: 25W, 40W, 60W, 100W
	Energy-saving lamp: 9W, 11W (for sealed atmosphere)
	LED： 3W, 5W, 8W
Rated voltage	220~240V AC 50/60Hz
Earthing protection	M5 (internal & external earth bolts)
Degree of protection	IP66
Ambient temperature	-40℃~+55℃
Terminal	3 x 1.5~4mm^2 (L+N+PE)
Mounting	Portable type, ceiling type, pendant pole type
Cable entries	4 x M25 x 1.5 for ceiling type and portable type, 1 x M25 x 1.5 for pendant pole type
Cable gland (optional)	DQM-II (Ex d) or DQM-III (Ex d) is recommended. Please see P7/22~31.
Applicable cable outer diameter	Φ10~Φ14 (mm)

Photometric data

Note: LED luminous flux is from the standard product of which colour temperature is 5400 to 6500K (cool white).

BDD81-A□□

Rated luminous flux
25W Incandescent lamp: 201lm
40W Incandescent lamp: 318lm
60W Incandescent lamp: 500lm
100W Incandescent lamp: 1025lm
The data from Philips lamp

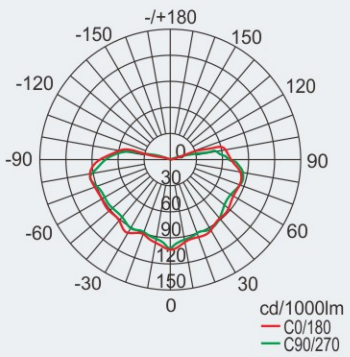

BDD81-ESL□□

Rated luminous flux
9W Energy-saving lamp: 400 lm
11W Energy-saving lamp: 570 lm
The data from Philips lamp

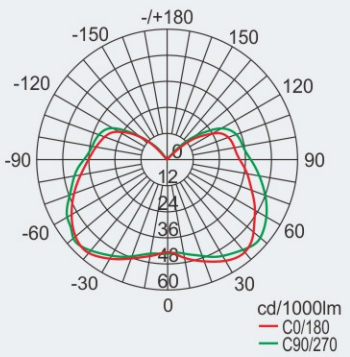

BDD81-LED□□

Rated luminous flux
3W LED: 255lm
5W LED: 425lm
8W LED: 680lm

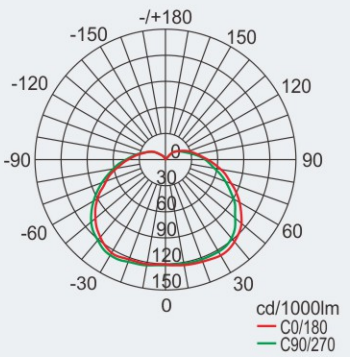

Pendant Light Fittings
BDD91 Series Explosion-proof Light Fittings



- Explosion protection to
  - -CENELEC
  - -IEC
  - -NEC
- Can be used in
  - Zone 1 and Zone 2
  - Zone 21 and Zone 22
  - Class I, Zone 1 and Zone 2
  - Class I, Division 1, Groups A, B, C, D
- Applicable lamp (max.400W):
  - -Metal halide lamp (HIE)
  - -High pressure sodium lamp (HSE)
  - -High pressure mercury lamp (HME)
- Three enclosure types: 150, 250, 400
- Integral control gear, easy installation and maintenance.

Catalogue number logic

BDD91 -□ -□ □ □

- Mounting
  - D: hook type
  - K: bracket type
  - L: pole type
- Lamp power (W)
- Lamp
  - HIE: Metal halide lamp
  - HSE: High pressure sodium lamp
  - HME: High pressure mercury lamp
- Enclosure type: 150, 250, 400
- Explosion-proof light fittings

Selection table

Type/Ordering code	Available lamp power (W)			Lamp holder	Weight (kg)
	HIE	HSE	HME		
BDD91-150	70, 100, 150	70, 100	80, 125	E27	11.20
BDD91-250	250	150, 250	250	E40	14.80
BDD91-400	250, 400	150, 250, 400	400	E40	16.70

Note: 1. The light fittings are supplied without lamp. PHILIPS lamps are recommended.
2. HPI European standard ballast is supplied with HIE light fitting. HPI European standard lamps are recommended.
3. The light fittings are supplied without external reflector. Please specify when ordering.

Zones 1&2; 21&22

Technical data

Explosion-proof light fittings	BDD91-150-□□□
Explosion protection	
Global (IECEx)	IECEx CQM 12.0016X
Gas and dust	Ex d IIC T□[1] Gb
	Ex t IIIC T□[1] Db IP66
Europe (ATEX)	DNV 11 ATEX 05977X
Gas and dust	Ⓔx II 2 G Ex d IIC T□[1] Gb
	Ⓔx II 2 D Ex tb IIIC T□[1] Db IP66
	[1] See Selection table
Certificates	IECEx; ATEX; CU-TR
Conformity to standards	EN 60079-0, EN 60079-1, EN 60079-31
	IEC 60079-0, IEC 60079-1, IEC 60079-31
Material	
Enclosure	Copper-free Aluminium Alloy, powder coated surface, yellow (RAL1021)
Transparent cover	Toughened glass, stands 4J impact
Internal reflector	High-purity aluminium
External reflector (optional)	Pure aluminium, anodic-oxidation treatment for surface
Wire guard	Stainless steel
Ballast	Electromagnetic ballast, rapid starting, stable performance
Trigger	General trigger
Power factor	COSϕ ≥0.90 (compensated)
Exposed fastener	Stainless steel
Lamp	
Available lamp and lamp power (W)	Available lamp: HIE 70W, 100W, 150W; HSE 70W, 100W; HME 80W, 125W — Lamp holder: E27
	Note: HPI European standard ballast is available in general.
Rated voltage	220~240V AC 50Hz (60Hz is optional)
Earthing protection	M5 (internal & external earth bolts)
Degree of protection	IP66
Ambient temperature	-60℃~+55℃
Terminal	3 x 1.5~4mm² (L+N+PE)
Mounting	Bracket type, pole type, hook type
Cable entries	2 x M25x1.5 for bracket type, 1 x M25x1.5 for pole type.
Cable gland (optional)	DQM-II (Ex d) or DQM-III (Ex d) is recommended. Please see P7/22~31.

Selection table (BDD91-150)

Lamp	Lamp power (W)	Temperature classes	
		Gas	Dust
HIE	70, 100	T4	T130℃
HME	80		
HSE	70, 100		
HIE	150	T142℃	T142℃
HME	125	T147℃	T147℃

Photometric data

BDD91-150-□□□(Without external reflector)



Rated luminous flux
70W High pressure sodium lamp: 6600 lm
100W High pressure sodium lamp: 10200 lm
80W High pressure mercury lamp: 3800 lm
125W High pressure mercury lamp: 6300 lm
70W Metal halide lamp: 5800 lm
100W Metal halide lamp: 8700 lm
150W Metal halide lamp: 13500 lm
The data from Philips lamp

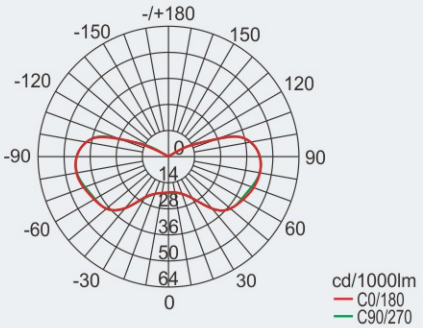

BDD91-150-□□□(With wide reflector)



Rated luminous flux
70W High pressure sodium lamp: 6600 lm
100W High pressure sodium lamp: 10200 lm
80W High pressure mercury lamp: 3800 lm
125W High pressure mercury lamp: 6300 lm
70W Metal halide lamp: 5800 lm
100W Metal halide lamp: 8700 lm
150W Metal halide lamp: 13500 lm
The data from Philips lamp

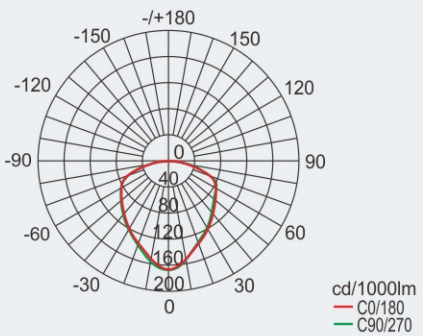

BDD91-150-□□□(With deep reflector)



Rated luminous flux
70W High pressure sodium lamp: 6600 lm
100W High pressure sodium lamp: 10200 lm
80W High pressure mercury lamp: 3800 lm
125W High pressure mercury lamp: 6300 lm
70W Metal halide lamp: 5800 lm
100W Metal halide lamp: 8700 lm
150W Metal halide lamp: 13500 lm
The data from Philips lamp

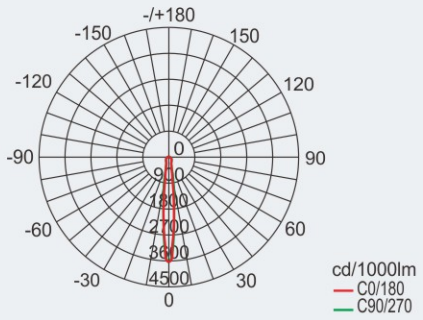

We can provide lighting design and data by professional lighting software DIALUX based upon simulated site situation on request.

Technical data

Explosion-proof light fittings	BDD91-250-□□□
Explosion protection	
Global (IECEx)	IECEx CQM 12.0016X
Gas and dust	Ex d IIC T3 Gb
	Ex t IIIC T190℃ Db IP66
Europe (ATEX)	DNV 11 ATEX 06159X
Gas and dust	Ⓔx II 2 G Ex d IIC T3 Gb
	Ⓔx II 2 D Ex tb IIIC T190℃ Db IP66
Certificates	IECEx; ATEX; CU-TR
Conformity to standards	EN 60079-0, EN 60079-1, EN 60079-31
	IEC 60079-0, IEC 60079-1, IEC 60079-31
Material	
Enclosure	Copper-free Aluminium Alloy, powder coated surface, yellow (RAL1021)
Transparent cover	Toughened glass, stands 4J impact
Internal reflector	High-purity aluminium
External reflector (optional)	Pure aluminium, anodic-oxidation treatment for surface
Wire guard	Stainless steel
Ballast	Electromagnetic ballast, rapid starting, stable performance
Trigger	General trigger
Power factor	COSϕ ≥0.90 (compensated)
Exposed fastener	Stainless steel
Lamp	

Available lamp and lamp power (W)

Available lamp			Lamp holder
HIE	HSE	HME	
250W	150W, 250W	250W	E40

Note: HPI European standard ballast is available in general

Rated voltage	220~240V AC 50Hz (60Hz is optional)
Earthing protection	M5 (internal & external earth bolts)
Degree of protection	IP66
Ambient temperature	-60℃~+55℃
Terminal	3 x 1.5~4mm^2 (L+N+PE)
Mounting	Bracket type, pole type, hook type
Cable entries	2 x M25x1.5 for bracket type, 1 x M25x1.5 for pole type.
Cable gland (optional)	DQM-II (Ex d) or DQM-III (Ex d) is recommended. Please see P7/22~31.

Photometric data

BDD91-250-□□□(Without external reflector)



Rated luminous flux
250W Metal halide lamp: 23200 lm
150W High pressure sodium lamp: 18000 lm
250W High pressure sodium lamp: 33200 lm
250W High pressure mercury lamp: 13000 lm
The data from Philips lamp

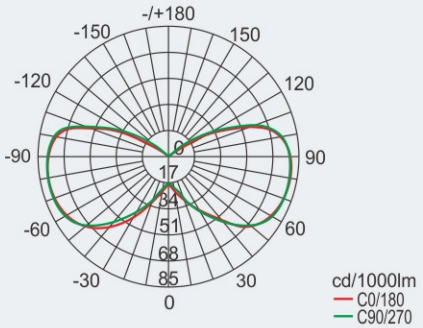

BDD91-250-□□□(With wide reflector)



Rated luminous flux
250W Metal halide lamp: 23200 lm
150W High pressure sodium lamp: 18000 lm
250W High pressure sodium lamp: 33200 lm
250W High pressure mercury lamp: 13000 lm
The data from Philips lamp

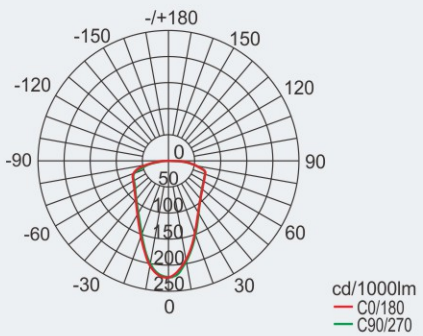

BDD91-250-□□□(With deep reflector)



Rated luminous flux
250W Metal halide lamp: 23200 lm
150W High pressure sodium lamp: 18000 lm
250W High pressure sodium lamp: 33200 lm
250W High pressure mercury lamp: 13000 lm
The data from Philips lamp

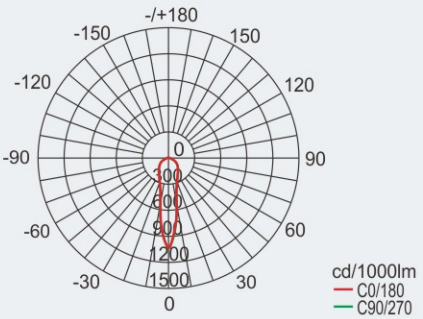

We can provide lighting design and data by professional lighting software DIALUX based upon simulated site situation on request.

Technical data

Explosion-proof light fittings	BDD91-400-□□□
Explosion protection	
Global (IECEx)	IECEx CQM 12.0016X
Gas and dust	Ex d IIC T□[1)] Gb
	Ex tb IIIC T□[1)] Db IP66
Europe (ATEX)	DNV 11 ATEX 06160X
Gas and dust	Ⓔx II 2 G Ex d IIC T□[1)] Gb
	Ⓔx II 2 D Ex tb IIIC T□[1)] Db IP66
	[1)] See Selection Table
Certificates	IECEx; ATEX; CU-TR
Conformity to standards	EN 60079-0, EN 60079-1, EN 60079-31
	IEC 60079-0, IEC 60079-1, IEC 60079-31
Material	
Enclosure	Copper-free Aluminium Alloy, powder coated surface, yellow (RAL1021)
Transparent cover	Toughened glass, stands 4J impact
Internal reflector	High-purity aluminium
External reflector (optional)	Pure aluminium, anodic-oxidation treatment for surface
Wire guard	Stainless steel
Ballast	Electromagnetic ballast, rapid starting, stable performance
Trigger	General trigger
Power factor	COSφ ≥0.90 (compensated)
Exposed fastener	Stainless steel
Lamp	
Available lamp and lamp power (W)	Available lamp: HIE 250W, 400W; HSE 150W, 250W, 400W; HME 400W — Lamp holder: E40
	Note: HPI European standard ballast is available in general.
Rated voltage	220V, 230V, 240V AC 50Hz, 220~240V AC 50Hz (60Hz is optional)
Earthing protection	M5 (internal & external earth bolts)
Degree of protection	IP66
Ambient temperature	-60℃~+55℃(+40℃)
Terminal	3 x 1.5~4mm^2 (L+N+PE)
Mounting	Bracket type, pole type, hook type
Cable entries	2 x M25x1.5 for bracket type, 1 x M25x1.5 for pole type.
Cable gland (optional)	DQM-II (Ex d) or DQM-III (Ex d) is recommended. Please see P7/22~31.

Selection table

Rated voltage (V)	Rated power (W)	Temperature classes			
		-60℃≤Ta≤+55℃		-60℃≤Ta≤+40℃	
		Gas	Dust	Gas	Dust
220V~240V AC 50/60Hz	HIE250W HSE150W	T4	T130℃	-	-
	HIE400W, HSE400W HME400W	T3	T190℃	-	-
220V AC 50/60Hz	HSE250W	T4	T130℃	-	-
230V/240V AC 50/60Hz	HSE250W	-	-	T4	T130℃

Photometric data

BDD91-400-□□□(Without external reflector)



Rated luminous flux
400W High pressure sodium lamp: 56500 lm
400W High pressure mercury lamp: 22000 lm
400W Metal halide lamp: 42000 lm
The data from Philips lamp

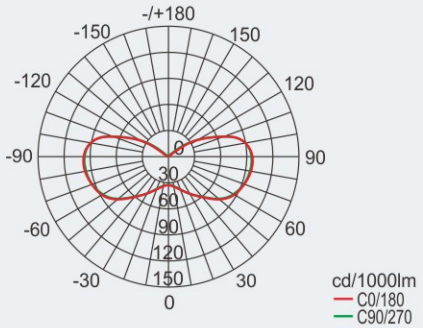

BDD91-400-□□□(With wide reflector)



Rated luminous flux
400W High pressure sodium lamp: 56500 lm
400W High pressure mercury lamp: 22000 lm
400W Metal halide lamp: 42000 lm
The data from Philips lamp

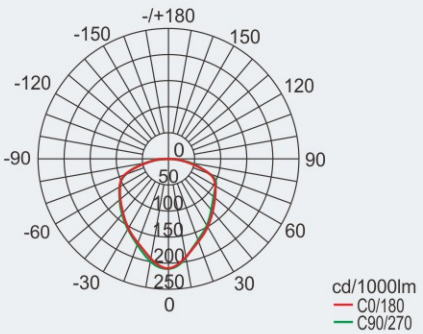

BDD91-400-□□□(With deep reflector)



Rated luminous flux
400W High pressure sodium lamp: 56500 lm
400W High pressure mercury lamp: 22000 lm
400W Metal halide lamp: 42000 lm
The data from Philips lamp

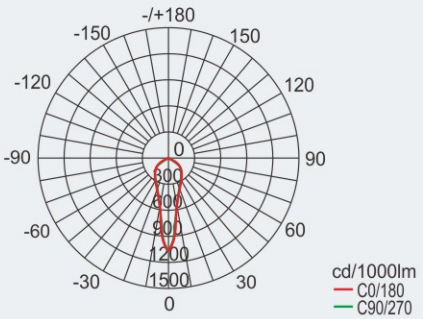

We can provide lighting design and data by professional lighting software DIALUX based upon simulated site situation on request.

Dimension drawings (all dimensions in mm) - subject to alteration

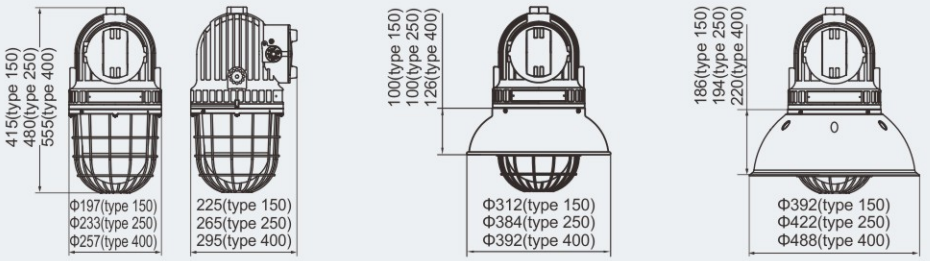

Mounting type (all dimensions in mm) – subject to alteration

Installation reference

K: bracket type

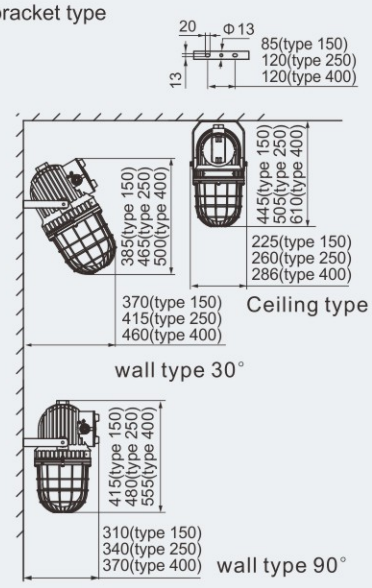

D: hook type

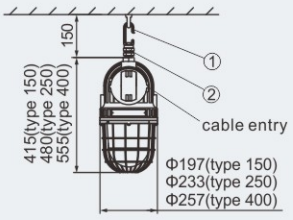

L: pole type (the pole is provided by user)

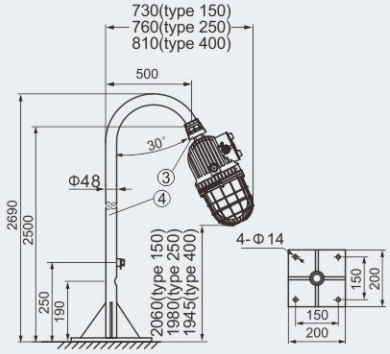

①.Hook (Stainless steel).
②.BGJ-III explosion-proof connector, M25 x 1.5(M) / M25 x 1.5(F) Stainless steel.
③.BGJ–III explosion–proof connector, M25 x 1.5(M) / M25 x 1.5(M) Stainless steel.
④.Pole shall not be supplied with light fittings; if required, please specify when ordering.

Accessories

Picture	Name	Ordering code	Weight (kg)
	150 Wide reflector	91001	0.20
	250 Wide reflector	61002	0.27
	400 Wide reflector	91003	0.45
	150 Deep reflector	91004	0.44
	250 Deep reflector	91005	0.55
	400 Deep reflector	91006	0.65

Note: Ballast, trigger and capactior see P1/21.

Pendant Light Fittings
BnD81 Series Explosion-proof Light Fittings



- Explosion protection to
  - -CENELEC
  - -IEC
  - -NEC
- Can be used in
  - Zone 2
  - Zone 21 and Zone 22
  - Class I, Zone 2
  - Class I, Division 2, Groups A, B, C, D
- Available lamp (max.400W):
  - -Metal halide lamp (HIE)
  - -High pressure sodium lamp (HSE)
  - -High pressure mercury lamp (HME)
- Three enclosure types: 150, 250, 400
- Integral control gear, easy installation and maintenance.
- Both American standard and European standard are available.

Catalogue number logic

BnD81 -□-□ □ □

- Mounting
  - X: ceiling type
  - B: wall type
  - G: pendant pole type
  - L: pole type 25°
- Lamp power (W)
- Lamp
  - HIE: Metal halide lamp
  - HSE: High pressure sodium lamp
  - HME: High pressure mercury lamp
- Enclosure type: 150, 250, 400
- Explosion-proof light fittings

Selection table

Type/Ordering code	Available lamp power (W)			Lamp holder	Weight (kg)	
	HIE	HSE	HME		American standard	European standard
BnD81-150	70, 100, 150	70, 100	80, 125	E27 (E26)	8.05	6.15
BnD81-250	175, 250	150, 250	250	E40 (E39)	13.00	10.20
BnD81-400	400	400	400	E40 (E39)	18.45	13.60

Note: 1. The light fittings are supplied without lamp. PHILIPS lamps are recommended.
2. The light fittings are supplied without external reflector. Please specify when ordering.
3. High pressure mercury lamp is not available in American standard products.

Zones 2; 21&22

Technical data

Explosion-proof light fittings	BnD81-150-□□□
Explosion protection	
Global (IECEx)	IECEx CQM 12.0045X
Gas and dust	Ex nR IIC T4 or T3 Gc[1)] Ex tb IIIC T130℃ or T190℃ Db[1)]
Europe (ATEX)	LCIE 12 ATEX 1018X(gas) LCIE 12 ATEX 3093X(dust)
Gas and dust	Ⓔx II 3 G Ex nR IIC T4 or T3 Gc[1)] Ⓔx II 2 D Ex tb IIIC T130℃ or T190℃ Db IP65[1)]
	[1)] See Selection table
Certificates	IECEx; ATEX; UL
Conformity to standards	EN 60079-0, EN 60079-15, EN 60079-31 IEC 60079-0, IEC 60079-15, IEC 60079-31 UL 1598, CSA C22.2 No.250.0-8, UL 60079-0, UL 60079-15 CSA C22.2 No. 60079-0, CSA C22.2 No. 60079-15
Material	
Enclosure	Copper-free Aluminium Alloy, powder coated surface, yellow (RAL1021)
Transparent cover	Toughened glass, stands 4J impact
External reflector (optional)	Pure aluminium, anodic-oxidation treatment for surface
Wire guard (optional)	Stainless steel
Ballast	Electromagnetic ballast, rapid starting, stable performance
Trigger	General trigger
Power factor	COSϕ ≥0.90 (compensated)
Exposed fastener	Stainless steel
Lamp	
Lamp holder	American Standard: E26; European Standard: E27
Available lamp and lamp power (W)	

Available lamp	American Standard	European Standard
	120V/208V/240V/277V/480V AC	220~240V, 250V AC
HIE	70W, 100W,150W	70W, 100W, 150W
HSE	70W,100W	70W, 100W
HME	-	80W, 125W

Note: Please see Selection table of American standard HID lamp and corresponding electrical components (See P1/22)

Rated voltage	American standard: 120V/208V/240V/277V/480V AC 60Hz (50Hz is optional) European standard: 220~240V AC 50Hz (60Hz is optional) 250V AC 50Hz (60Hz is optional)
Earthing protection	M5 (internal & external earth bolts)
Degree of protection	IP65
Ambient temperature	ATEX / IECEx: -60℃~+55℃(+40℃); UL: -60℃~+45℃
Terminal	3 x 1.5~4mm^2 (L+N+PE)
Mounting	Ceiling type, wall type, pendant pole type, pole type 25°
Cable entries	1 x M25 x 1.5
Cable gland (optional)	DQM-I (Ex e) is recommended. Please see P7/18~21.

Selection table

Rated power (W)		Temperature classes			
		-60℃≤Ta≤+40℃		-60℃≤Ta≤+55℃	
		Gas	Dust	Gas	Dust
European Standard	HIE 70W, 100W	T4	T130℃	T4	T130℃
	HIE 150W			T3	T190℃
	HME 80W			T4	T130℃
	HME 125W			T3	T190℃
	HSE 70W, 100W			T4	T130℃
American Standard	HIE 70W, 100W, 150W	T4	T130℃	T4	T130℃
	HSE 70W, 100W				

Photometric data



BnD81-150-□□□(Without external reflector)

Rated luminous flux
70W High pressure sodium lamp: 6600 lm
100W High pressure sodium lamp: 10200 lm
80W High pressure mercury lamp: 3800 lm
125W High pressure mercury lamp: 6300 lm
70W Metal halide lamp: 5800 lm
100W Metal halide lamp: 8700 lm
150W Metal halide lamp: 13500 lm
The data from Philips lamp

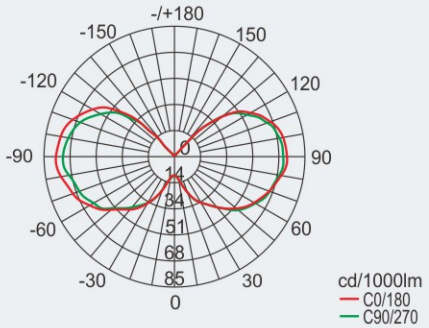



BnD81-150-□□□(With wide reflector)

Rated luminous flux
70W High pressure sodium lamp: 6600 lm
100W High pressure sodium lamp: 10200 lm
80W High pressure mercury lamp: 3800 lm
125W High pressure mercury lamp: 6300 lm
70W Metal halide lamp: 5800 lm
100W Metal halide lamp: 8700 lm
150W Metal halide lamp: 13500 lm
The data from Philips lamp

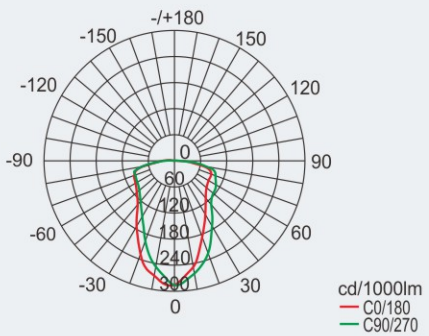



BnD81-150-□□□(With deep reflector)

Rated luminous flux
70W High pressure sodium lamp: 6600 lm
100W High pressure sodium lamp: 10200 lm
80W High pressure mercury lamp: 3800 lm
125W High pressure mercury lamp: 6300 lm
70W Metal halide lamp: 5800 lm
100W Metal halide lamp: 8700 lm
150W Metal halide lamp: 13500 lm
The data from Philips lamp

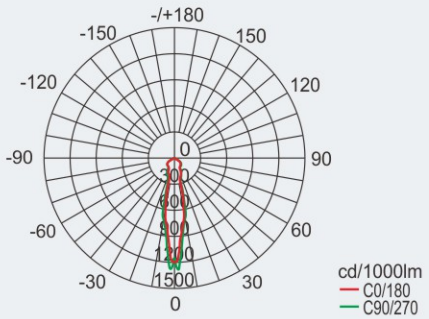

We can provide lighting design and data by professional lighting software DIALUX based upon simulated site situation on request.

Technical data

Explosion-proof light fittings	BnD81-250-□□□
Explosion protection	
Global (IECEx)	IECEx CQM 12.0010X
Gas and dust	Ex nR IIC T3 Gc
	Ex tb IIIC T190℃ Db
Europe (ATEX)	LCIE 12 ATEX 1011X(gas); LCIE 12 ATEX 3044X(dust)
Gas and dust	Ⓔx II 3 G Ex nR IIC T3 Gc
	Ⓔx II 2 D Ex t IIIC T190℃ Db IP65
Certificates	IECEx; ATEX; UL
Conformity to standards	EN 60079-0, EN 60079-15, EN 60079-31
	IEC 60079-0, IEC 60079-15, IEC 60079-31
	UL 1598, CSA C22.2 No.250.0-8, UL 60079-0, UL 60079-15
	CSA C22.2 No. 60079-0, CSA C22.2 No. 60079-15
Material	
Enclosure	Copper-free Aluminium Alloy, powder coated surface, yellow (RAL1021)
Transparent cover	Toughened glass, stands 4J impact
External reflector (optional)	Pure aluminium, anodic-oxidation treatment for surface
Wire guard (optional)	Stainless steel
Ballast	Electromagnetic ballast, rapid starting, stable performance
Trigger	General trigger
Power factor	COSφ ≥0.90 (compensated)
Exposed fastener	Stainless steel
Lamp	
Lamp holder	American Standard: E39; European Standard: E40

Available lamp and lamp power (W)

Available lamp	American Standard	European Standard
	120V/208V/240V/277V/480V AC	220~240V, 250V AC
HIE	175W, 250W	250W
HSE	150W, 250W	150W, 250W
HME	-	250W

Note: Please see Selection table of American standard HID lamp and corresponding electrical components (See P1/22)

Rated voltage	American standard: 120V/208V/240V/277V/480V AC 60Hz (50Hz is optional) European standard: 220~240V AC 50Hz (60Hz is optional) 250V AC 50Hz (60Hz is optional)
Earthing protection	M5 (internal & external earth bolts)
Degree of protection	IP65
Ambient temperature	ATEX / IECEx: -60℃~+55℃; UL: -60℃~+45℃
Terminal	3 x 1.5~4mm^2 (L+N+PE)
Mounting	Ceiling type, wall type, pendant pole type, pole type 25°
Cable entries	1 x M25 x 1.5
Cable gland (optional)	DQM-I (Ex e) is recommended. Please see P7/18~21.

Photometric data

BnD81-250-□□□(Without external reflector)



Rated luminous flux
250W Metal halide lamp: 23200 lm
250W High pressure sodium lamp: 33200 lm
250W High pressure mercury lamp: 13000 lm
The data from Philips lamp

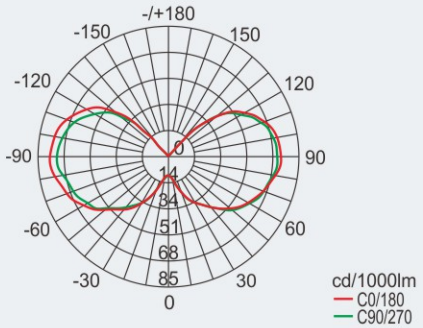

BnD81-250-□□□(With wide reflector)



Rated luminous flux
250W Metal halide lamp: 23200 lm
250W High pressure sodium lamp: 33200 lm
250W High pressure mercury lamp: 13000 lm
The data from Philips lamp

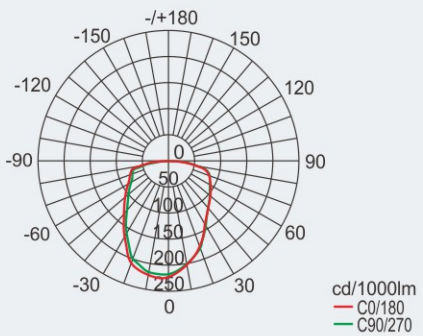

BnD81-250-□□□(With deep reflector)



Rated luminous flux
250W Metal halide lamp: 23200 lm
250W High pressure sodium lamp: 33200 lm
250W High pressure mercury lamp: 13000 lm
The data from Philips lamp

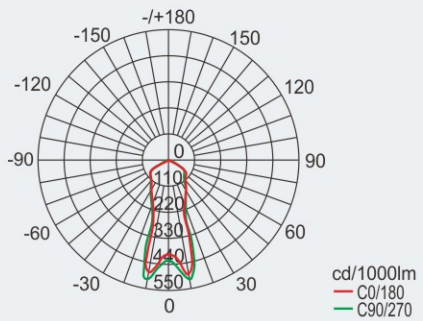

We can provide lighting design and data by professional lighting software DIALUX based upon simulated site situation on request.

Technical data

Explosion-proof light fittings	BnD81-400-□□□
Explosion protection	
Global (IECEx)	IECEx CQM 12.0039X
Gas and dust	Ex nR IIC T□[1] Gc Ex tb IIIC T□[1] Db
Europe (ATEX)	LCIE 12 ATEX 1019X(gas); LCIE 12 ATEX 3094X(dust)
Gas and dust	Ⓔx II 3 G Ex nR IIC T□[1] Gc Ⓔx II 2 D Ex tb IIIC T□[1] Db IP65 [1] See Selection Table
Certificates	IECEx; ATEX; UL
Conformity to standards	EN 60079-0, EN 60079-15, EN 60079-31 IEC 60079-0, IEC 60079-15, IEC 60079-31 UL 1598, CSA C22.2 No.250.0-8, UL 60079-0, UL 60079-15 CSA C22.2 No. 60079-0, CSA C22.2 No. 60079-15
Material	
Enclosure	Copper-free Aluminium Alloy, powder coated surface, yellow (RAL1021)
Transparent cover	Toughened glass, stands 4J impact
External reflector (optional)	Pure aluminium, anodic-oxidation treatment for surface
Wire guard (optional)	Stainless steel
Ballast	Electromagnetic ballast, rapid starting, stable performance
Trigger	General trigger
Power factor	COSφ ≥0.90 (compensated)
Exposed fastener	Stainless steel
Lamp	
Lamp holder	American Standard: E39; European Standard: E40
Available lamp and lamp power (W)	

Available lamp	American Standard	European Standard
	120V/208V/240V/277V/480V AC	220~240V, 250V AC
HIE	400W	400W
HSE	400W	400W
HME	-	400W

	Note: Please see Selection table of American standard HID lamp and corresponding electrical components (See P1/22)
Rated voltage	American standard: 120V/208V/240V/277V/480V AC 60Hz (50Hz is optional) European standard: 220~240V AC 50Hz (60Hz is optional) 250V AC 50Hz (60Hz is optional)
Earthing protection	M5 (internal & external earth bolts)
Degree of protection	IP65
Ambient temperature	ATEX / IECEx: -60℃~+55℃(+40℃); UL: -60℃~+45℃
Terminal	3 x 1.5~4mm^2 (L+N+PE)
Mounting	Ceiling type, wall type, pendant pole type, pole type 25°
Cable entries	1 x M25 x 1.5
Cable gland (optional)	DQM-I (Ex e) is recommended. Please see P7/18~21.

Selection table

Rated power (W)		Temperature classes			
		-60℃≤Ta≤+40℃		-60℃≤Ta≤+55℃	
		Gas	Dust	Gas	Dust
European Standard	HIE 400W	T3	T190℃	T3	T190℃
	HSE 400W				
	HME 400W			T212℃	T212℃
American Standard	HIE 400W	T3	T190℃	T3	T190℃
	HSE 400W	T4	T130℃		

Photometric data



BnD81-400-□□□(Without external reflector)

Rated luminous flux
400W Metal halide lamp: 42000 lm
400W High pressure sodium lamp: 56500 lm
400W High pressure mercury lamp: 22000 lm
The data from Philips lamp

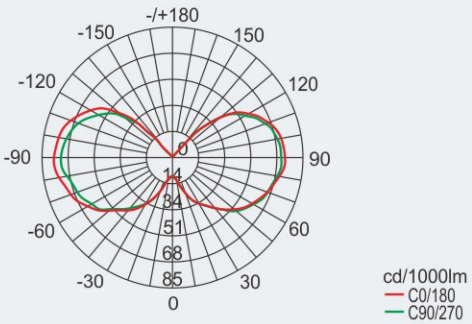



BnD81-400-□□□(With wide reflector)

Rated luminous flux
400W Metal halide lamp: 42000 lm
400W High pressure sodium lamp: 56500 lm
400W High pressure mercury lamp: 22000 lm
The data from Philips lamp

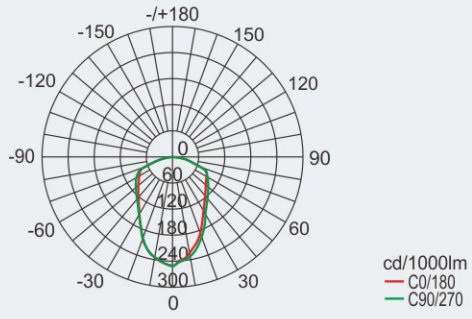



BnD81-400-□□□(With deep reflector)

Rated luminous flux
400W Metal halide lamp: 42000 lm
400W High pressure sodium lamp: 56500 lm
400W High pressure mercury lamp: 22000 lm
The data from Philips lamp

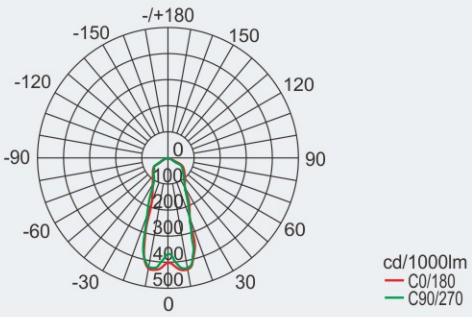

We can provide lighting design and data by professional lighting software DIALUX based upon simulated site situation on request.

Dimension drawings (all dimensions in mm) - subject to alteration

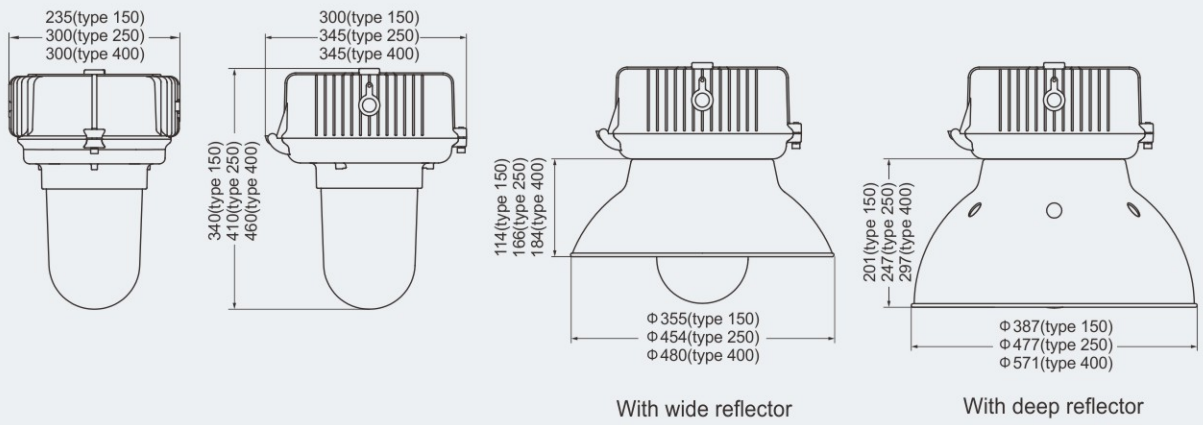

With wide reflector

With deep reflector

Mounting type (all dimensions in mm) – subject to alteration

Installation reference

X: ceiling type

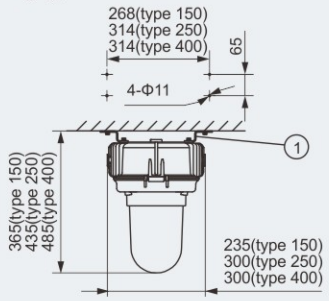

B: wall type

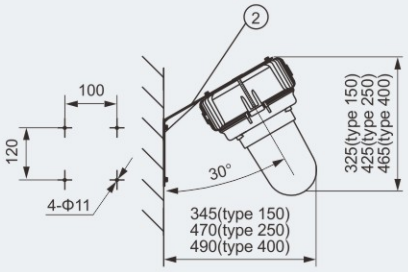

G: pendant pole type

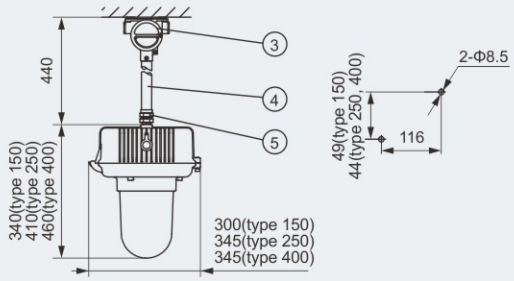

L: pole type 25°

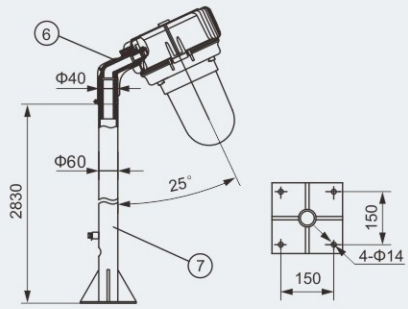

Mounting Accessories & Spare Parts Table

Supplied according to the mounting type

Mounting type	Accessories			Ordering	Weight (kg)
	Name	Qty	Illustration		
X: ceiling type	①.Mounting bracket	2	Powder coated carbon steel	81X02	0.20
B: wall type	②.Wall bracket (powder coated carbon steel)	1	150 type	81B01	1.20
			250 type	81B02	1.50
			400 type	81B02	1.50
G: pendant pole type	③.BHD51-F Explosion-proof junction box	1	150 type: copper–free aluminium	BHD51-F	0.80
			250,400 type: cast iron		2.10
	④.Straight pipe (M25 x 1.5)	1	Length: 300mm	81G01	0.41
	⑤.BGJ-III Explosion-proof connector	1	M25 x 1.5(M) / M25 x 1.5(F) Stainless steel	81D02	0.26
L: pole type 25°	⑥.Pole type 25° connector	1	Copper–free aluminium	81L02	0.80
	⑦.Pole	1	Φ60mm	81L03	-

Note: 1. Accessories not in the table shall be supplied by user.
2. Pole ⑦ shall not be supplied with light fittings; if required, please specify when ordering.

Accessories

Picture	Name	Ordering code	Weight (kg)	Picture	Name	Ordering code	Weight (kg)
	150 Wide reflector	81001	0.25		150 Deep reflector	81004	0.43
	250 Wide reflector	81002	0.35		250 Deep reflector	81005	0.63
	400 Wide reflector	81003	0.50		400 Deep reflector	81006	0.91

Floodlights
BAT53 Series Explosion-proof Floodlights



- Explosion protection to
  - -CENELEC
  - -IEC
  - -NEC
- Can be used in
  - Zone 1 and Zone 2
  - Zone 21 and Zone 22
  - Class I, Zone 1 and Zone 2
  - Class I, Division 2, Groups C, D
  - Class I, Division 1, Groups C, D
- Four enclosure types: 125, 250, 400, 1000.
- Integral control gear, easy installation and maintenance.
- Rapid starting trigger, stable performance and long service life.
- Enclosure in Copper-free Aluminium Alloy, powder coated surface, yellow (RAL1021).
- Toughened glass cover resistant to temperature changes.

Catalogue number logic

BAT53 - □- □ □ □

- Mounting
  - S: street lamp type (only for type BAT53-250, See P2/144)
  - Y: movable type (only for type BAT53-125 and BAT53-250)
  - G: fixed type
- Lamp power (W)
- Lamp
  - HIE: Metal halide lamp
  - HSE: High pressure sodium lamp
  - HME: High pressure mercury lamp
- Enclosure type: 125, 250, 400, 1000
- Explosion-proof floodlights

Selection table

Type/Ordering code	Available lamp power (W)			Lamp holder	Weight (kg)
	HIE	HSE	HME		
BAT53-125	70, 100, 150	70, 100	80, 125	E27	8.45
BAT53-250	250	150, 250	250	E40	14.75
BAT53-400	400	400	-	E40	30.75
BAT53-1000	1000	1000	-	E40	115.00

Note

1. Please specify any spare parts when ordering. See Accessories table.
2. 125, 250 and 400 type light fittings are supplied without lamp. PHILIPS lamps are recommended.
3. HPI European standard ballast is supplied with HIE light fitting. HPI European standard lamps are recommended.
4. 1000 type light fittings are supplied with lamp and ballast.

Zones 1&2; 21&22

Technical data

Explosion-proof floodlights	BAT53-125-□□□
Explosion protection	
Global (IECEx)	IECEx CQM 13.0037X
Gas and dust	Ex d e IIB T□[1)] Gb Ex tb IIIC T□[1)] Db IP66
Europe (ATEX)	EPT 18 ATEX 2930X
Gas and dust	Ⓔx II 2 G Ex db e IIB T□[1)] Gb Ⓔx II 2 D Ex tb IIIC T□[1)] Db
	[1)] See Selection table
Certificates	IECEx; ATEX; CU-TR
Conformity to standards	EN 60079-0, EN 60079-1, EN 60079-7, EN 60079-31 IEC 60079-0, IEC 60079-1, IEC 60079-7, IEC 60079-31
Material	
Enclosure	Copper-free Aluminium Alloy, powder coated surface, yellow (RAL1021)
Glass cover	Toughened glass, stands 4J impact
Ballast	Electromagnetic ballast, rapid starting, stable performance
Wire guard	Powder coated carbon steel, white
Internal reflector	High-purity aluminium
Trigger	Explosion-proof electronic trigger
Power factor	COSϕ ≥0.90 (compensated)
Exposed fastener	Stainless steel
Lamp	
Lamp holder	E27
Available lamp and lamp power (W)	High pressure sodium lamp (HSE): 70W, 100W High pressure mercury lamp (HME): 80W, 125W Metal halide lamp (HIE): 70W, 100W, 150W Note: HPI European standard ballast is available in general
Rated voltage	220~240V AC 50Hz (60Hz is optional)
Earthing protection	M5 (internal & external earth bolts)
Degree of protection	IP66
Ambient temperature	-60℃~+55℃
Terminal	3 x 1.5~2.5mm^2 (L+N+PE)
Cable entries	2 x Φ21: 1 x M20 x 1.5 cable gland (DQM-I Ex e),1 x M20 x 1.5 plug
Available cable outer diameter	Φ5~Φ10 (mm)

Selection table

Lamp	Lamp power (W)	Temperature classes	
		Gas	Dust
HIE	70	T156℃	T156℃
HSE	70	T156℃	T156℃
HSE	100	T185℃	T185℃
HIE	100	T181℃	T181℃
HIE	150	T190℃	T190℃
HME	80	T163℃	T163℃
HME	125	T209℃	T209℃

Dimension drawings (all dimensions in mm) - subject to alteration

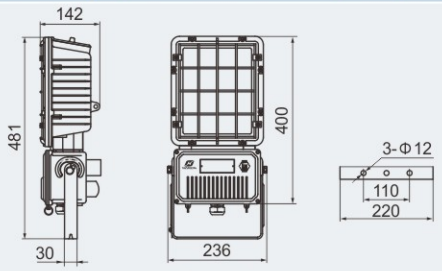

G: fixed type

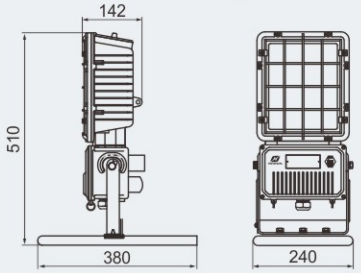

Y: movable type

Floodlights
BAT53 Series Explosion-proof Floodlights

Technical data

Explosion-proof floodlights	BAT53-250-□□□
Explosion protection	
Global (IECEx)	IECEx CQM 07.0004
Gas and dust	Ex d e IIB T3 Gb
Europe (ATEX)	LCIE 05 ATEX 6143
Gas and dust	Ⓔx II 2 G Ex d e IIB T3
Certificates	IECEx; ATEX; CU-TR
Conformity to standards	EN 60079-0, EN 60079-1, EN 60079-7 IEC 60079-0, IEC 60079-1, IEC 60079-7
Material	
Enclosure	Copper-free Aluminium Alloy, powder coated surface, yellow (RAL1021)
Glass cover	Toughened glass, stands 4J impact
Ballast	Electromagnetic ballast, rapid starting, stable performance
Wire guard	Powder coated carbon steel, white
Internal reflector	High-purity aluminium
Trigger	Explosion-proof electronic trigger
Power factor	COSΦ ≥0.90 (compensated)
Exposed fastener	Stainless steel
Lamp	
Lamp holder	E40
Available lamp and lamp power (W)	High pressure sodium lamp (HSE): 150W, 250W High pressure mercury lamp (HME): 250W Metal halide lamp (HIE): 250W Note: HPI European standard ballast is available in general
Rated voltage	220~240V AC 50Hz (60Hz is optional)
Earthing protection	M5 (internal & external earth bolts)
Degree of protection	IP66
Ambient temperature	-20℃~+55℃
Terminal	3 x 1.5~2.5mm^2 (L+N+PE)
Cable entries	2 x Φ26: 1 x M25 x 1.5 cable gland (DQM-I Ex e),1 x M25 x 1.5 plug
Available cable outer diameter	Φ10~Φ14 (mm)

Dimension drawings (all dimensions in mm) - subject to alteration

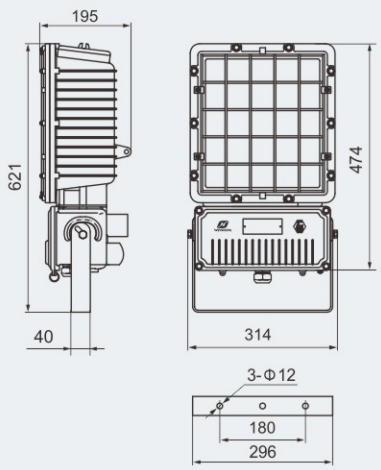

G: fixed type

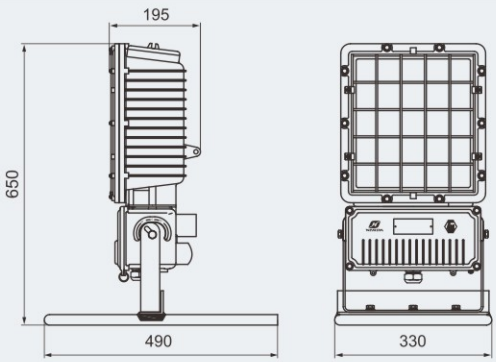

Y: movable type

Technical data

Explosion-proof floodlights	BAT53-400-□□□
Explosion protection	
Global (IECEx)	IECEx CQM 08.0014
Gas and dust	Ex d e IIB T3 Gb
Europe (ATEX)	LCIE 07 ATEX 6106
Gas and dust	Ⓔx II 2 G Ex d e IIB T3
Certificates	IECEx; ATEX
Conformity to standards	EN 60079-0, EN 60079-1, EN 60079-7
	IEC 60079-0, IEC 60079-1, IEC 60079-7
Material	
Enclosure	Copper-free Aluminium Alloy, powder coated surface, yellow (RAL1021)
Glass cover	Toughened glass, stands 4J impact
Ballast	Electromagnetic ballast, rapid starting, stable performance
Internal reflector	High-purity aluminium
Trigger	Explosion-proof electronic trigger
Power factor	COSϕ ≥0.90 (compensated)
Exposed fastener	Stainless steel
Wire guard (optional)	Powder coated carbon steel, white
Lamp	
Lamp holder	E40
Available lamp and lamp power (W)	High pressure sodium lamp (HSE): 400W (tubular)
	Metal halide lamp (HIE): 400W (tubular)
	Note: HPI European standard ballast is available in general
Rated voltage	220~240V AC 50Hz (60Hz is optional)
Earthing protection	M5 (internal & external earth bolts)
Degree of protection	IP65
Ambient temperature	-20℃~+55℃
Terminal	3 x 1.5~4mm² (L+N+PE)
Cable entries	2 x M25 x 1.5: 1 x M25 x 1.5 cable gland (DQM-I Ex e),1 x M25 x 1.5 plug
Available cable outer diameter	Φ10~Φ14 (mm)

Dimension drawings (all dimensions in mm) - subject to alteration

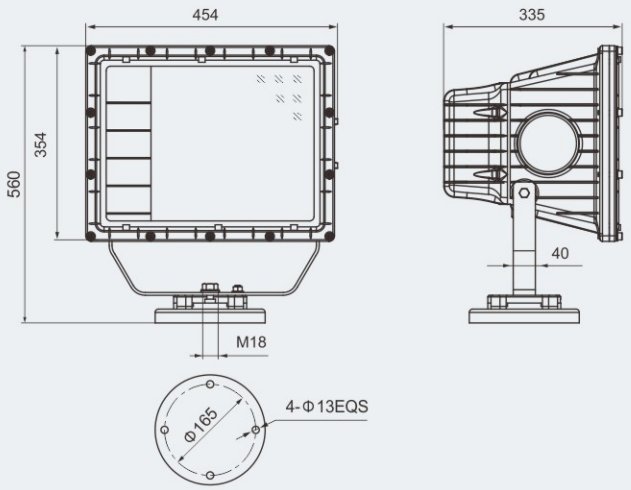

Floodlights
BAT53 Series Explosion-proof Floodlights

Technical data

Explosion-proof floodlights	BAT53-1000-□□□
Explosion protection	
Global (IECEx)	IECEx CQM 14.0066X
Gas and dust	Ex d IIB T3 Gb
	Ex tb IIIC T193℃ Db IP66
Europe (ATEX)	EPT 15 ATEX 1977X
Gas and dust	Ⓔx II 2 G Ex d IIB T3 Gb
	Ⓔx II 2 D Ex tb IIIC T193℃ Db IP66
Certificates	IECEx; ATEX; CU-TR
Conformity to standards	EN 60079-0, EN 60079-1, EN 60079-31
	IEC 60079-0, IEC 60079-1, IEC 60079-31
Material	
Enclosure	Welded carbon steel, powder coated surface, yellow (RAL1021)
Glass cover	Toughened glass, stands 4J impact
Ballast	Electromagnetic ballast, rapid starting, stable performance
Trigger	General trigger
Power factor	COSΦ ≥0.90 (compensated)
Internal reflector	High-purity aluminium
Exposed fastener	Stainless steel
Lamp	
Lamp holder	E40
Available lamp and lamp power (W)	High pressure sodium lamp (HSE):1000W
	Metal halide lamp (HIE):1000W
	Note: HPI European standard ballast is available in general
Rated voltage	230V AC 50Hz (60Hz is optional)
Earthing protection	M5 (internal & external earth bolts)
Degree of protection	IP66
Ambient temperature	-20℃~+55℃
Terminal	3 x 1.5~4mm^2 (L+N+PE)
Cable entries	1 x M25 x 1.5
Cable gland	The cable between floodlight and ballast through BNG-M25 x 1.5(M)/M25 x 1.5(M) explosion-proof flexible conduit (length: 1000 mm); One explosion-proof cable gland (DQM-II-M25 x 1.5, Ex d, brass, armored, cable wiring)
Available cable outer diameter	Φ10~Φ14 (mm)

Dimension drawings (all dimensions in mm) - subject to alteration

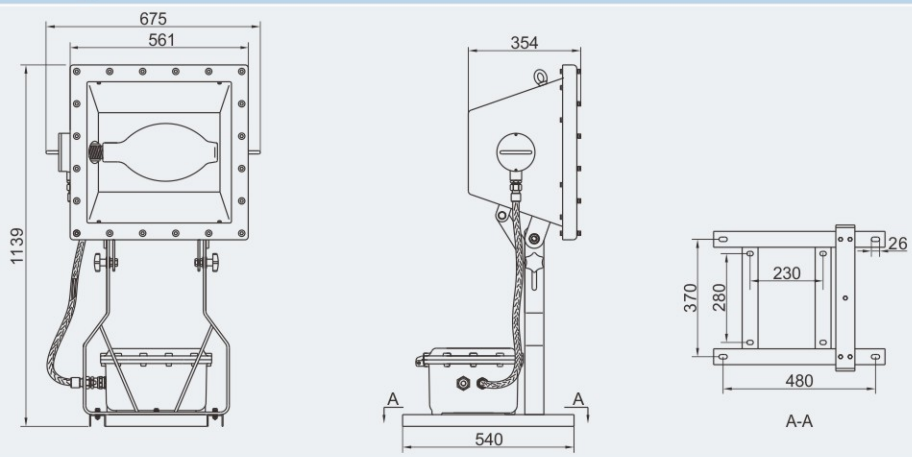

Photometric data

BAT53-125-□□□

Rated luminous flux
70W Metal halide lamp: 5800 lm
100W Metal halide lamp: 8700 lm
150W Metal halide lamp: 13500 lm
70W High pressure sodium lamp: 6600 lm
100W High pressure sodium lamp: 10700 lm
80W High pressure mercury lamp: 3800 lm
125W High pressure mercury lamp: 6300 lm
The data from Philips lamp

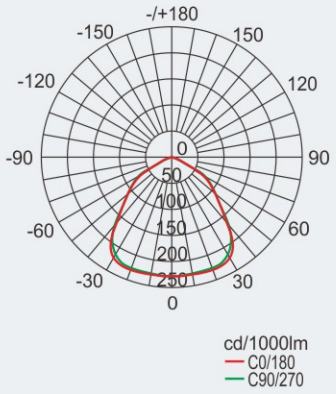

BAT53-250-□□□

Rated luminous flux
250W Metal halide lamp: 23200 lm
150W High pressure sodium lamp: 18000 lm
250W High pressure sodium lamp: 33200 lm
250W High pressure mercury lamp: 13000 lm
The data from Philips lamp

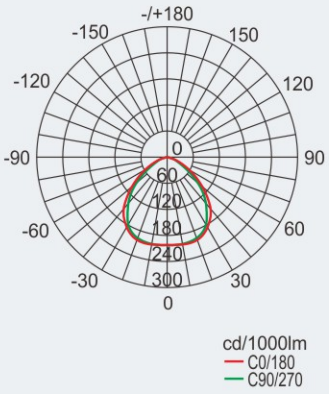

BAT53-400-□□□

Rated luminous flux
400W Metal halide lamp: 42500 lm
400W High pressure sodium lamp: 56500 lm
The data from Philips lamp

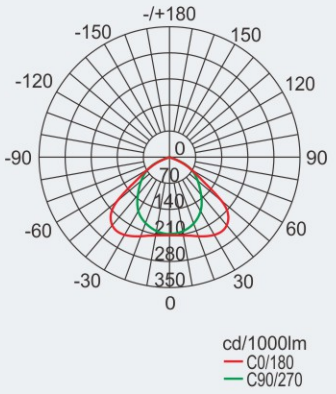

We can provide lighting design and data by professional lighting software DIALUX based upon simulated site situation on request.

Accessories

Picture	Name	Ordering code	Weight (kg)
	Explosion-proof electronic trigger (125, 250, 400 type)	61034	0.30
	125 Explosion-proof capacitor	53012	0.45
	250 Explosion-proof capacitor	53013	0.45
	400 Explosion-proof capacitor	53014	0.55
	125 Movable support	53015	1.80
	250 Movable support	53016	2.35

Note: Ballast see P1/21

Floodlights
BAT85 Series Explosion-proof Floodlights



- Explosion protection to
  -CENELEC
  -IEC
  -NEC
- Can be used in
  Zone 1 and Zone 2
  Zone 21 and Zone 22
  Class I, Zone 1 and Zone 2
  Class I, Division 1, Groups A, B, C, D
- Enclosure in Copper-free Aluminium Alloy, powder coated surface, yellow (RAL1021).
- Integral control gear, easy installation and maintenance.
- Toughened glass cover resistant to temperature changes.
- The light fittings are supplied without lamp source. PHILIPS lamps are recommended.
- Both American standard and European standard are available.

Catalogue number logic

BAT85 - □ □

- Lamp power (W)
- Lamp
  - HIE: Metal halide lamp
  - HSE: High pressure sodium lamp
  - HME: High pressure mercury lamp
- Explosion-proof floodlights

Zones 1&2; 21&22

Technical data

Explosion-proof floodlights	BAT85-□□
Explosion protection	
Global (IECEx)	IECEx CQM 11.0013X
Gas and dust	Ex db IIC T3 or xxx℃[1] Gb
	Ex tb IIIC Txxx℃[1] Db IP66
Europe (ATEX)	TÜV CY 18 ATEX 0206017X
Gas and dust	Ⓔx II 2 G Ex db IIC T3 or xxx℃[1] Gb
	Ⓔx II 2 D Ex tb IIIC Txxx℃[1] Db IP66
	[1] See Selection table
Certificates	IECEx; ATEX; CU-TR
Conformity to standards	EN 60079-0, EN 60079-1, EN 60079-31, IEC 60079-0, IEC 60079-1, IEC 60079-31
Material	
Enclosure	Copper-free Aluminium Alloy, powder coated surface, yellow (RAL1021)
Glass cover	Toughened glass, stands 4J impact
Ballast	Electromagnetic ballast, rapid starting, stable performance
Trigger	General trigger
Power factor	COSφ ≥0.90 (compensated)
Internal reflector	High-purity aluminium
Exposed fastener	Stainless steel
Lamp	
Lamp holder	European standard: E27, American standard: E26
Available lamp	Metal halide lamp (HIE): 70W, 100W, 150W
	High pressure sodium lamp (HSE): 70W, 100W
	High pressure mercury lamp (HME): 80W, 125W
Lamp holder	European standard: E40, American standard: E39
Available lamp	Metal halide lamp (HIE): 250W, 400W
	High pressure sodium lamp (HSE): 150W, 250W, 400W
	High pressure mercury lamp (HME): 250W, 400W
Rated voltage	European standard: 120V, 208V, 220~240V, 250V, 277V AC 50Hz (60Hz is optional)
	American standard: 120V, 208V, 220~240V, 250V, 277V AC 60Hz (50Hz is optional)
Earthing protection	M5 (internal & external earth bolts)
Degree of protection	IP66
Ambient temperature	-40℃~+60℃(+40℃)
Terminal	3 x 1.5~4mm^2 (L+N+PE)
Cable entries	2 x M25 x 1.5 plugs
Cable gland (optional)	DQM-II (Ex d) or DQM-III (Ex d) is recommended. Please see P7/22~31.
Weight	European standard: 28.50kg American standard: 31.40kg

Floodlights
BAT85 Series Explosion-proof Floodlights

Selection table

Rated voltage	Lamp	Lamp power (W)	Temperature classes			
			-40℃≤Ta≤+40℃		-40℃≤Ta≤+55℃	
			Gas	Dust	Gas	Dust
120V AC 50/60Hz	HIE	70, 100, 150	T4	T130℃	T4	T130℃
		175, 250, 400	T3	T195℃	T3	T195℃
	HSE	70, 100	T6	T80℃	T5	T95℃
		150, 250, 400	T3	T195℃	T3	T195℃
208V AC 50/60Hz	HIE	70, 100, 150	T5	T95℃	T4	T130℃
		175, 250, 400	T3	T195℃	T3	T195℃
	HME	80, 125	T5	T95℃	T4	T130℃
		250, 400	T3	T195℃	T3	T195℃
	HSE	70, 100	T6	T80℃	T5	T90℃
		150, 250, 400	T3	T195℃	T3	T195℃
220V AC 50/60Hz	HIE	175, 250, 400	T3	T195℃	T3	T195℃
	HME	250, 400	T3	T195℃	T3	T195℃
	HSE	150, 250, 400	T3	T195℃	T3	T195℃
230V AC 50/60Hz	HIE	70, 100, 150	T4	T130℃	T3	T195℃
		175, 250, 400	T3	T195℃	T3	T195℃
	HME	80, 125	T4	T130℃	T4	T130℃
		250	T4	T130℃	T3	T195℃
		400	T3	T195℃	213℃	T213℃
	HSE	70, 100, 150, 250	T4	T130℃	T4	T130℃
		400	T3	T195℃	211℃	T211℃
240V AC 50/60Hz	HIE	70, 100, 150	T4	T130℃	T4	T130℃
		175, 250, 400	T3	T195℃	T3	T195℃
	HME	80, 125, 250	T4	T130℃	T3	T195℃
		400	T3	T195℃	216℃	T216℃
	HSE	70, 100	T4	T130℃	T4	T130℃
		150, 250	T3	T195℃	T3	T195℃
		400			217℃	T217℃
250V AC 50/60Hz	HIE	70, 100, 150	T4	T130℃	T4	T130℃
		175, 250, 400	T3	T195℃	T3	T195℃
	HME	80, 125	T5	T95℃	T4	T130℃
		250	T4	T130℃	T3	T195℃
		400	T3	T195℃	221℃	T221℃
	HSE	70, 100	T5	T95℃	T4	T130℃
		150, 250	T3	T195℃	T3	T195℃
		400	211℃	T211℃	231℃	T231℃
277V AC 50/60Hz	HIE	70, 100, 150	T5	T95℃	T4	T130℃
		175, 250	T4	T130℃	T3	T195℃
		400	T3	T195℃	213℃	T213℃
	HME	80, 125	T5	T95℃	T4	T130℃
		250	T3	T195℃	T3	T195℃
	HSE	70, 100	T4	T130℃	T4	T130℃
		150, 250	T3	T195℃	T3	T195℃
		400	210℃	T210℃	230℃	T230℃

Photometric data

BAT85-□□

Rated luminous flux
70W Metal halide lamp: 10500 lm
100W Metal halide lamp: 10500 lm
150W Metal halide lamp: 10500 lm
250W Metal halide lamp: 25000 lm
70W High pressure sodium lamp: 18000 lm
100W High pressure sodium lamp: 18000 lm
150W High pressure sodium lamp: 18000 lm
250W High pressure sodium lamp: 33200 lm
80W High pressure mercury lamp: 13000 lm
125W High pressure mercury lamp: 13000 lm
250W High pressure mercury lamp: 13000 lm
400W Metal halide lamp: 42500 lm
400W High pressure sodium lamp: 56500 lm
400W High pressure mercury lamp: 22000 lm
The data from Philips lamp

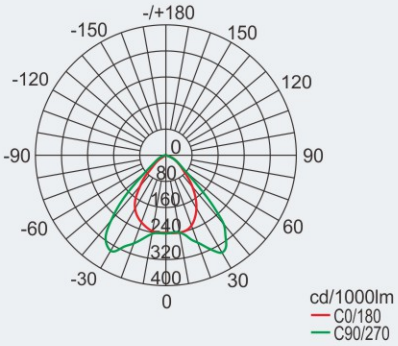

We can provide lighting design and data by professional lighting software DIALUX based upon simulated site situation on request

Dimension drawings (all dimensions in mm) - subject to alteration

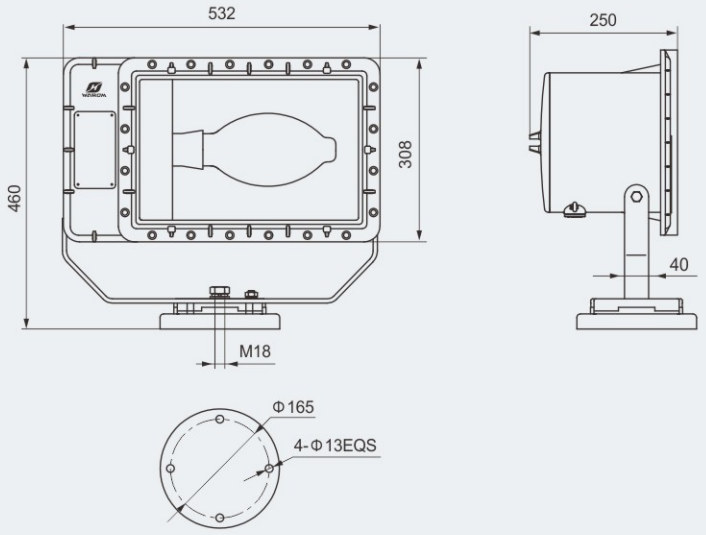

Floodlights
BnT81 Series Explosion-proof Floodlights



- Explosion protection to
  -CENELEC
  -IEC
  -NEC
- Can be used in
  Zone 2
  Zone 21 and Zone 22
  Class I, Zone 2
  Class I, Division 2, Groups A, B, C, D
- Available lamp (max.1000W):
  -Metal halide lamp (HIE)
  -High pressure sodium lamp (HSE)
- Two enclosure types: 400, 1000.
- Type 400: lamp and ballast are of integral type.
  Type 1000: lamp and ballast are split type.
- Enclosure in Copper-free Aluminium Alloy, powder coated surface, yellow (RAL 1021)
- Both American standard and European standard are available.
- Type 400 are supplied without lamp. PHILIPS lamps are recommended.
- Type 1000 are supplied with lamp.

Catalogue number logic

BnT81 - □ - □ □

- □ □ — Lamp power (W)
- □ — Lamp: HIE: Metal halide lamp; HSE: High pressure sodium lamp
- □ — Enclosure type: 400, 1000
- BnT81 — Explosion-proof floodlights

WAROM

Zones 2; 21&22

Technical data

Explosion-proof floodlights BnT81-400-□□

Explosion protection	
Global (IECEx)	IECEx CQM 12.0011X
Gas and dust	Ex nR IIC xxx[1] Gc Ex tb IIIC Txxx℃[1] Db IP65
Europe (ATEX)	LCIE 12 ATEX 1012X (gas); LCIE 12 ATEX 3052X (dust);
Gas and dust	Ⓔx II 3 G Ex nR IIC xxx[1] Gc Ⓔx II 2 D Ex t IIIC Txxx℃[1] Db IP65
	[1] See Selection table
Certificates	IECEx; ATEX; UL
Conformity to standards	EN 60079-0, EN 60079-15, EN 60079-31 IEC 60079-0, IEC 60079-15, IEC 60079-31 UL 1598, CSA C22.2 No.250.0-8, UL 60079-0, UL 60079-15 CSA C22.2 No. 60079-0, CSA C22.2 No. 60079-15
Material	
Enclosure	Copper-free Aluminium Alloy, powder coated surface, yellow (RAL 1021)
Glass cover	Toughened glass, stands 4J impact
Internal reflector	High-purity aluminium
Ballast	Electromagnetic ballast, rapid starting, stable performance
Trigger	General trigger
Power factor	COSφ ≥0.90 (compensated)
Exposed fastener	Stainless steel
Lamp	
Lamp holder	American Standard: E39; European Standard: E40

Available lamp and lamp power (W)			
American standard 120V/208V/240V/277V/480V AC	HIE	175W, 250W, 400W
	HSE	150W, 250W, 400W
European standard 220~240V, 250V AC	HIE	250W, 400W
	HSE	150W, 250W, 400W

Note: Please see Selection table of American standard HID lamp and corresponding electrical components (See P1/22)

Rated voltage	American standard: 120V/208V/240V/277V/480V AC 60Hz (50Hz is optional) European standard: 220~240V, 250V AC 50Hz (60Hz is optional)
Earthing protection	M5 (internal & external earth bolts)
Degree of protection	IP65
Ambient temperature	ATEX / IECEx: -60℃~+55℃; UL: -60℃~+45℃
Terminal	3 x 1.5~4mm²(L+N+PE)
Cable entries	2 x Φ21: 1 x M20 x 1.5 plug, 1 x M20 x 1.5 cable gland (DQM-I Ex e)
Applicable cable outer diameter	Φ5~Φ10 (mm)
Weight	American standard: 16.10kg European standard: 12.85kg

Selection table

Rated voltage	Lamp	Lamp power (W)	Temperature classes	
			Gas	Dust
220~240V 250V AC 50/60Hz	HIE	250	T3	T190℃
	HSE	150,250	T3	T190℃
	HIE	400	T252℃	T252℃
	HSE	400	T252℃	T252℃
120V/208V 240V/277V 480V AC 50/60Hz	HIE	175,250,400	T3	T190℃
	HSE	150,250,400	T3	T190℃

Dimension drawings (all dimensions in mm) - subject to alteration

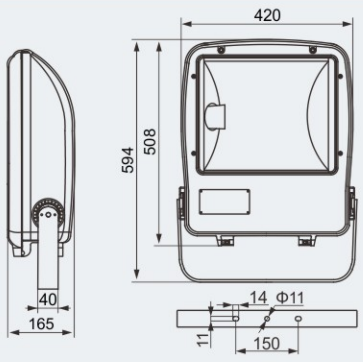

Floodlights
BnT81 Series Explosion-proof Floodlights

Technical data

Explosion-proof floodlights BnT81-1000-□□

Explosion protection			
Global (IECEx)	IECEx CQM 13.0006X		
Gas and dust	Ex nR IIC T2 Gc Ex tb IIIC T290℃ Db IP65		
Europe (ATEX)	LCIE 13 ATEX 1002X (gas); LCIE 13 ATEX 3008X (dust)		
Gas and dust	Ⓔx II 3 G Ex nR IIC T2 Gc Ⓔx II 2 D Ex tb IIIC T290℃ Db IP65		
Certificates	IECEx; ATEX		
Conformity to standards	EN 60079-0, EN 60079-15, EN 60079-31 IEC 60079-0, IEC 60079-15, IEC 60079-31		
Material			
Enclosure	Copper-free Aluminium Alloy, powder coated surface		
Glass cover	Toughened glass, stands 4J impact		
Internal reflector	High-purity aluminium		
Ballast	Electromagnetic ballast, rapid starting, stable performance		
Trigger	General trigger		
Power factor	COSφ ≥0.85 (compensated)		
Exposed fastener	Stainless steel		
Lamp			
Lamp holder	E40		
Available lamp and lamp power (W)	American standard 120V/208V/240V/277V AC	HIE	1000W
		HSE	1000W
	European standard 230V AC	HIE	1000W
		HSE	1000W
	Note: Please see Selection table of American standard HID lamp and corresponding electrical components (See P1/22)		
Rated voltage	American standard: 120V/208V/240V/277V AC 60Hz (50Hz is optional) European standard: 230V AC 50Hz (60Hz is optional)		
Earthing protection	M5 (internal & external earth bolts)		
Degree of protection	IP65		
Ambient temperature	-60℃~+55℃		
Terminal	3 x 1.5~4mm²(L+N+PE)		
Cable entries	Lamp: 1 x M20 x1.5 cable gland (DQM-I Ex e, plastic, cable wiring) Ballast: 2 x M20 x1.5 cable glands (DQM-I Ex e, plastic, cable wiring)		
Applicable cable outer diameter	Φ6~Φ12 (mm)		
Weight			
Lamp	10.00kg		
Ballast	American standard: 21.8kg European standard: 18.6kg		

Dimension drawings (all dimensions in mm) - subject to alteration

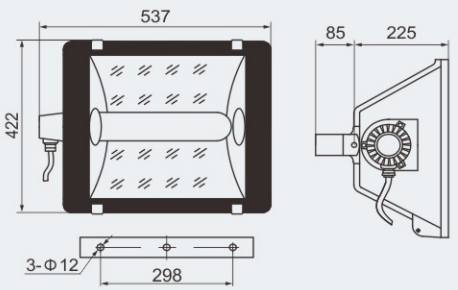

BnT81-1000

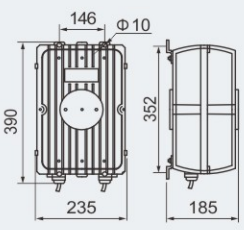

BnT81-1000 Ballast

Photometric data

BnT81-400-□□

Rated luminous flux
250W Metal halide lamp: 25000 lm
150W High pressure sodium lamp: 18000 lm
250W High pressure sodium lamp: 33200 lm
400W Metal halide lamp: 42500 lm
400W High pressure sodium lamp: 56500 lm
The data from Philips lamp

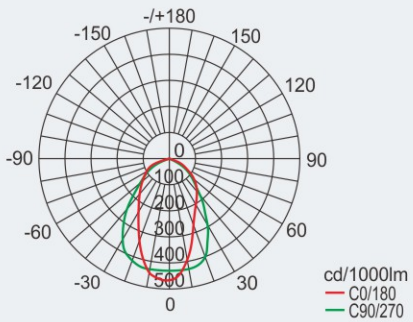

BnT81-1000-□□

Rated luminous flux
1000W Metal halide lamp: 85000 lm
1000W High pressure sodium lamp: 130000 lm
The data from Philips lamp

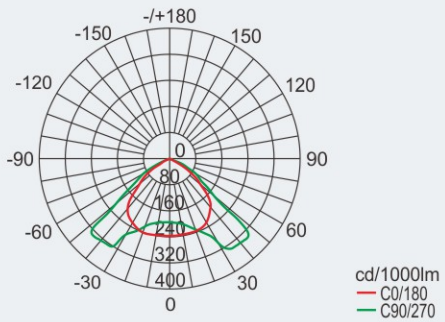

We can provide lighting design and data by professional lighting software DIALUX based upon simulated site situation on request



BAT53-250, BAT53-400, BAT85-400 Series
BDD91-150, BDD91-250, BDD91-400 Series
BAT86 Series, BnT81 Series, HRT81 Series
Explosion-proof Street Lamps

- Explosion protection to
  -CENELEC
  -IEC
  -NEC
- Can be used in
  Zone 1 and Zone 2
  Zone 21 and Zone 22
- Please refer to mounting schematic diagram to select right lamp and mounting types on request of job site.
- Please refer to this catalogue for detailed technical data and ordering information of each light fitting.
  Note: If BAT53-250 type street lamp is required, please specify when ordering.
- The street lamp is supplied without pole; please specify when ordering.

Mounting schematic diagram of bent arm type street lamp

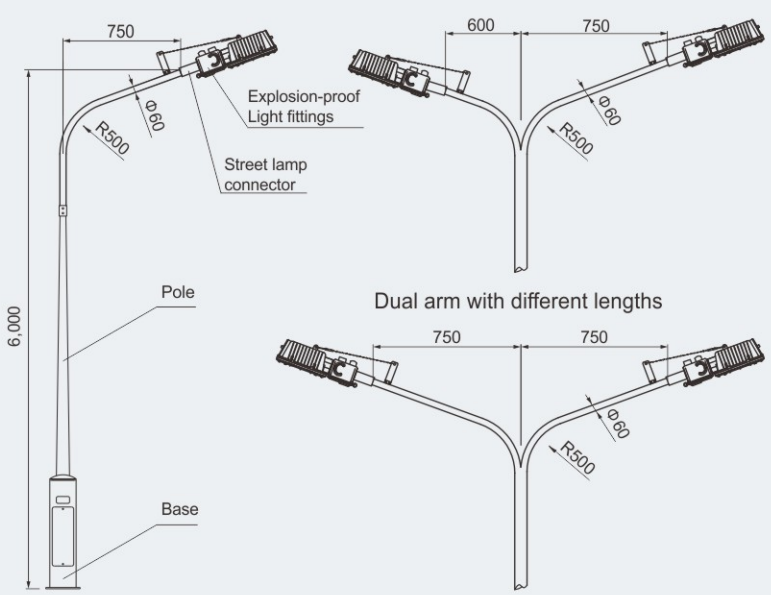

BAT53-250 series

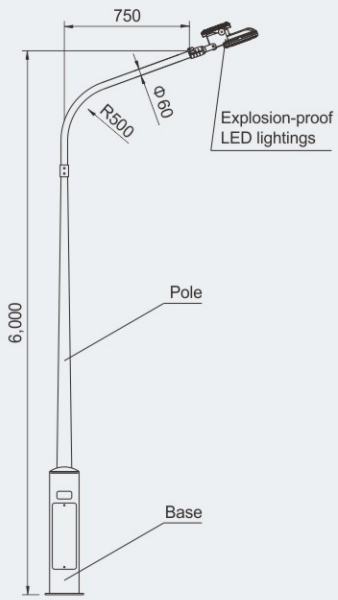

BAT86 series

Zones 1&2; 21&22

Mounting schematic diagram of platform type street lamp

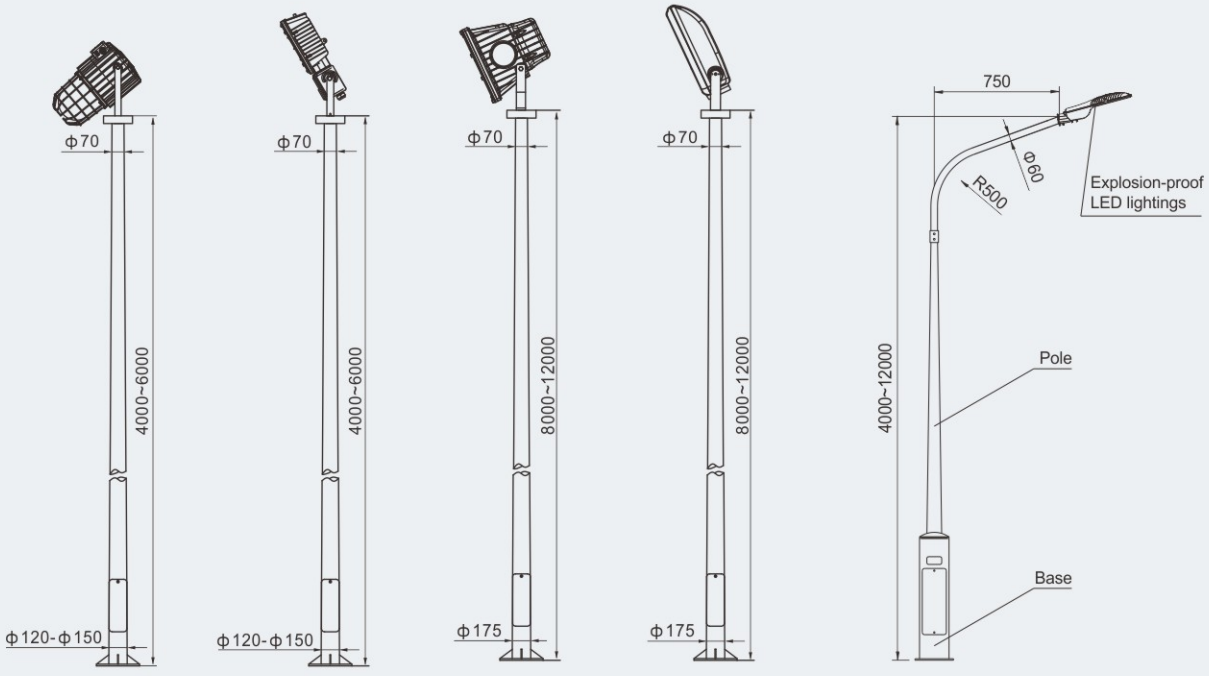

BDD91 series | BAT53-250 series | BAT53-400 series BAT85 series | BnT81-400 series HRT81 series | BAM52 series

Reference diagram of street lamp mounting base

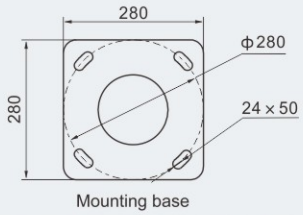

Mounting base

Used for: platform street lamp, the height of the pole: 6m to 9m

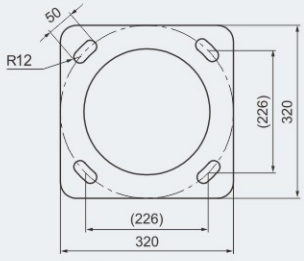

Mounting base

Used for:
1. Bent arm type street lamp.
2. Platform type street lamp, the height of the pole: 10m to 12m.

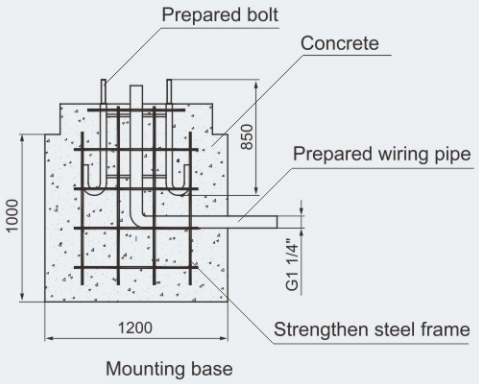

Mounting base

Street Lamps
BAM52 Series Explosion-proof LED Street Lamps



- Explosion protection to
  -CENELEC
  -IEC
  -NEC
- Can be used in
  Zone 2
  Zone 21 and Zone 22
- Please refer to mounting schematic diagram to select right lamp and mounting types on request of job site.
- Please refer to this catalogue for detailed technical data and ordering information of each light fitting.
- The street lamp is supplied without pole; please specify when ordering.

Catalogue number logic

BAM52 - □

- Lamp power (W)
- Explosion-proof LED street lamps

Dimension drawings (all dimensions in mm) - subject to alteration

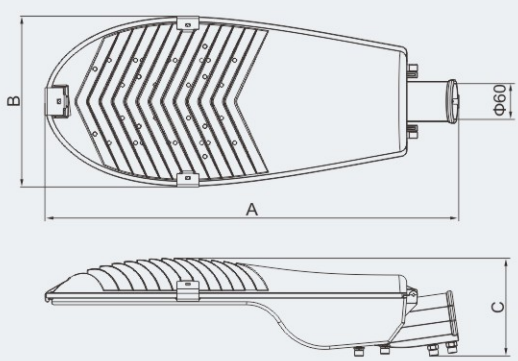

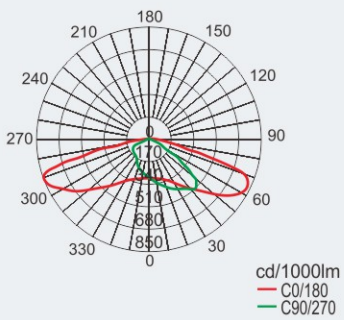

Type/Ordering code	Size(mm)			Weight (kg)	Rated luminous flux
	A	B	C		
BAM52-60	655	268	150	4.7	7200lm
BAM52-80					9600lm
BAM52-100	752	310	178	7.4	12000lm
BAM52-120				7.5	14400lm
BAM52-150	863	359	199	10.7	18000lm
BAM52-160					19200lm
BAM52-180				10.9	21600lm
BAM52-200					24000lm

We can provide lighting design and data by professional lighting software DIALUX based upon simulated site situation on request

Zones 2; 21&22

Technical data

Explosion-proof LED street lamps BAM52-□

Explosion protection	
Global (IECEx)	IECEx CNEX 23.0002X
Gas and dust	Ex nR IIC T6...T5 Gc Ex tb IIIC T80℃...T95℃ Db
Europe (ATEX)	CNEX 23 ATEX 0004 X (gas); CNEX 23 ATEX 0005 X(dust)
Gas and dust	Ⓔx II 3 G Ex nR IIC T6...T5 Gc Ⓔx II 2 D Ex tb IIIC T80℃...T95℃ Db
Certificates	IECEx; ATEX
Conformity to standards	EN 60079-0, EN 60079-15, EN 60079-31 IEC 60079-0, IEC 60079-15, IEC 60079-31
Material	
Enclosure	Aluminium Alloy, powder coated surface
Glass cover	Toughened glass, stands 4J impact
LED driver	Wide voltage input, CC-CV (constant current - constant voltage) output, power factor ≥0.95, with function of distributed current, constant current, surge-proof and anti-electromagnetic interference, and protection against overcurrent, open circuit, and short circuit
Exposed fastener	Stainless steel
Lamp	
Lamp specification	LED module, Multiple LED
Lamp power (W)	60W, 80W, 100W, 120W, 150W, 160W, 180W, 200W
Colour Temperature (CCT)	Cool white: 5700K Note: cool white is available in general. Warm white or nature white is optional, please specify when ordering.
Rated voltage	100~277V AC 50/60Hz, 130~250V DC
Degree of protection	IP66
Ambient temperature	-40℃~+55℃(+45℃)
Terminal	3×1.5~4mm^2 (L+N+PE)
Mounting	street lamp type
Cable entries	1×M20×1.5 cable gland (DQM-I Ex e, metal unarmored)

Selection table for BAM52-□

Type of production	Rated power	Ambient temperature / temperature classification			
		Ta≤+45℃		Ta≤+55℃	
BAM52-60	60W	--	--	T6	T80℃
BAM52-80	80W				
BAM52-100	100W				
BAM52-120	120W				
BAM52-150	150W	T6	T80℃	T5	T95℃
BAM52-160	160W				
BAM52-180	180W				
BAM52-200	200W				

Street Lamps
BAM52 Series Explosion-proof Street Lamps



- Explosion protection to
  -CENELEC
  -IEC
  -NEC
- Can be used in
  Zone 2
  Zone 21 and Zone 22
- Please refer to mounting schematic diagram to select right lamp and mounting types on request of job site.
- Please refer to this catalogue for detailed technical data and ordering information of each light fitting.
- The street lamp is supplied without pole; please specify when ordering.

Catalogue number logic

BAM52 - HSE □

- Lamp power (W)
- HSE: High pressure sodium lamp
- Explosion-proof street lamps

Selection table

Type / Ordering code	Rated voltage	Lamp power(W)	Weight (kg)
BAM52-HSE250	415V AC 50Hz	250	13.40
BAM52-HSE400		400	14.20
BAM52-HSE150	220~240V AC 50Hz	150	9.00
BAM52-HSE250		250	9.50
BAM52-HSE400		400	11.30
BAM52-HSE150	220~240V AC 60Hz	150	9.00
BAM52-HSE250		250	9.50
BAM52-HSE400		400	11.30

Note: The product is supplied according to “Type/Ordering code” in the table with mounting accessories.

Zones 2; 21&22

Technical data

Explosion-proof LED street lamps BAM52-HSE□

Explosion protection	
Global (IECEx)	IECEx CQM 22.0024X
Gas and dust	Ex nR IIC T□[1)] Gc Ex tb IIIC T□[1)] Db
Europe (ATEX)	TÜV CY 23 ATEX 0206765X
Gas and dust	Ⓔx II 3 G Ex nR IIC T□[1)] Gc Ⓔx II 2 D Ex tb IIIC T□[1)] Db
Certificates	IECEx; ATEX
Conformity to standards	EN 60079-0, EN 60079-15, EN 60079-31 IEC 60079-0, IEC 60079-15, IEC 60079-31
Material	
Enclosure	Aluminium Alloy, powder coated surface
Glass cover	Toughened glass, stands 4J impact
Ballast	Electromagnetic ballast, rapid starting, stable performance
Internal reflector	High-purity aluminium
Trigger	Explosion-proof electronic trigger
Power factor	COSϕ ≥0.90 (compensated)
Exposed fastener	Stainless steel
Lamp	
Lamp holder	E40
Lamp specification	High pressure sodium lamp (HSE)
Lamp power (W)	150W, 250W, 400W
Rated voltage	220~240V AC 50Hz, 220~240V AC 60Hz, 415V AC 50Hz
Degree of protection	IP66
Ambient temperature	-40℃~+55℃(+40℃)
Terminal	3×1.5~4mm² (L+N+PE)
Mounting	street lamp type
Cable entries	1×M20×1.5 cable gland (DQM-I Ex e, metal unarmored)

Selection table

Rated voltage	Rated power(W)	Temperature classification			
		-40℃≤Ta≤+40℃		-40℃≤Ta≤+55℃	
415V AC 50Hz	250, 400	T3	T190℃	T3	T190℃
220~240V AC 50Hz	150, 400	T4	T130℃	T3	T190℃
	250	T3	T133℃	T3	T190℃
220~240V AC 60Hz	150, 250, 400	T4	T130℃	T4	T130℃

Dimension drawings (all dimensions in mm) - subject to alteration

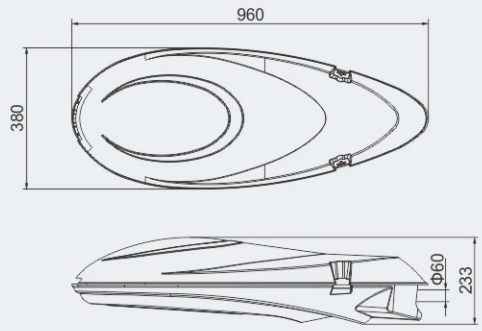

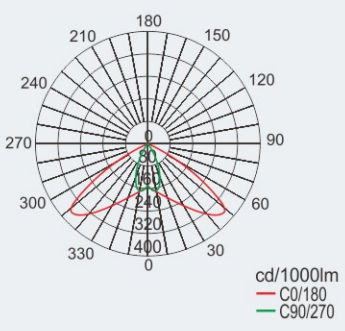

We can provide lighting design and data by professional lighting software DIALUX based upon simulated site situation on request

Hand Lamps



- Explosion protection to
  - -CENELEC
  - -IEC
  - -NEC
- Can be used in
  - Zone 1 and Zone 2
  - Zone 21 and Zone 22
  - Class I, Zone 1 and Zone 2
  - Class I, Division 1, Groups A, B, C, D
  - Class I, Division 2, Groups A, B, C, D

Dimension drawings (all dimensions in mm) - subject to alteration

HRD305 Portable Searchlight
LED: 9W/3W

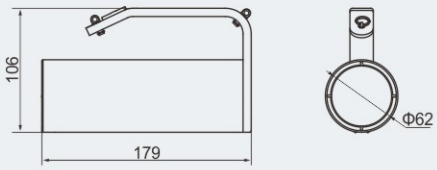

Dimension drawings (all dimensions in mm) - subject to alteration

HRD309E Searchlight
LED: 9W/3W

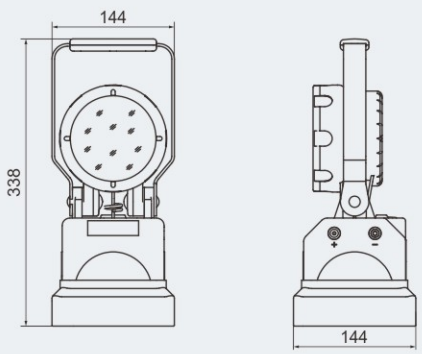

Zones 1&2; 21&22

Dimension drawings (all dimensions in mm) - subject to alteration

HRD503 Explosion-proof Maintenance Lamp
LED: 50W/25W

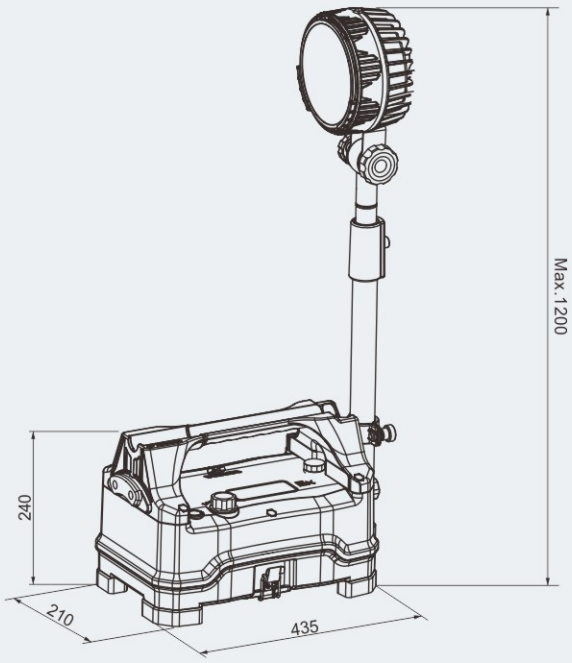

Dimension drawings (all dimensions in mm) - subject to alteration

BSX-60 Series Explosion-proof Incandescent Hand Lamps
LED: 3W/5W/8W
Incandescent lamp: 25W/40W/60W

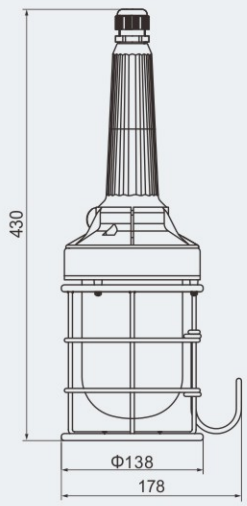

Hand Lamps
HRD305 Portable Searchlight



- Explosion protection to
  -CENELEC
  -IEC
  -NEC
- Can be used in
  Zone 1 and Zone 2
  Zone 21 and Zone 22
  Class I, Zone 1 and Zone 2
  Class I, Division 1, Groups A, B, C, D
- Safe and reliable: the product with reliable explosion-proof performance, can safely and reliably work in various combustible areas, the battery is equipped with PTC thermistor and temperature fuse; double-protected circuit, safety performance enhanced.
- Efficient and energy-saving: memory-free battery, with long service life, low auto-discharge rate, economic and environmental friendly, solid efficient LED lamp, low energy consumption and long service life.
- Waterproof and damage-proof: the enclosure is made of imported alloy with high strength, excellent strong impact resistant performance, unique sealing type, with very good water-proof performance.
- Anti-strong interference: scientific module driving circuit, strong performance of anti-shock and anti-electromagnetic interference.
- Heat resistant: LED radiator and battery are effectively isolated, which improves the stability of the light.
- Intelligent control: pulse dimming technology, strong light and working light can be changed freely, with battery detection indicator, which can detect the working condition at any time, intelligent charger is with protection circuit.
- Portable and flexible: small volume, light weight, several types of handling like portable and on shoulder, meeting different working requirement.

Technical data

Portable Searchlight HRD305

Explosion protection	
Global (IECEx)	IECEx CQM 13.0026X
Gas and dust	Ex d ia IIC T6 Gb Ex tb IIIC T80℃ Db IP68
Europe (ATEX)	LCIE 13 ATEX 3089X
Gas and dust	Ⓔx II 2 G Ex d ia IIC T6 Gb Ⓔx II 2 D Ex tb IIIC T80℃ Db IP68
Certificates	IECEx; ATEX
Conformity to standards	EN 60079-0, EN 60079-1, EN 60079-11, EN 60079-31 IEC 60079-0, IEC 60079-1, IEC 60079-11, IEC 60079-31
Rated voltage	14.8V
Rated capacity	2Ah
Lamp(LED)	
Rated power	9W / 3W
Current of strong light	900mA
Continuous working time	
Strong light	≥8h
Working light	≥16h
Charging time	≥8h
Charging voltage	100~240V AC, 50/60Hz
Service life of battery	about 1000 times cycling
Degree of protection	IP68
Weight	790g

Zones 1&2; 21&22

Hand Lamps
HRD309E Searchlight



- Explosion protection to
  -CENELEC
  -IEC
  -NEC
- Can be used in
  Zone 2
  Zone 21 and Zone 22
  Class I, Zone 2
  Class I, Division 2, Groups A, B, C, D
- Safe and reliable: with good explosion-proof performance and antistatic effect, the product can safely and reliably work in various combustible areas.
- Efficient and energy-saving: LED lamp, low energy consumption, high luminous efficacy, long service life, maintenance free and no subsequent usage cost, recyclable memory-free battery, pollution-free.
- Waterproof and damage-proof: the light adopts whole-sealing craft, applicable in damp and severe atmosphere, special alloy enclosure makes sure the light can resist strong shock and impact.
- Intelligent control: the light is with two kinds of working modes: strong light and working light, switch is controlled by intelligent chip,the strong light and weak light can be changed at random, single-chip control; with battery display and special protection circuit, with protection function of anti-over charging, over discharging and short circuit, reliably protect the battery and prolong the service life.
- Convenient and durable: unique lamp cap; lighting angle can be adjusted within the scope of -45°~ 55°, no lighting dead angle (lighting range of strong light: 800m, effective distance: 300m, suitable for long-distance searching and lighting in large area of close range), light weight, portable type, horizontal type, hang type, magnetic absorption, etc, convenient to use; the switch is with anti-incorrect operation function.

Technical data

Searchlight HRD309E

Explosion protection	
Global (IECEx)	IECEx CQM 16.0008X
Gas and dust	Ex nA nR IIC T4 Gc Ex tb IIIC T80℃ Db IP66
Europe (ATEX)	EPT 16 ATEX 2503X
Gas and dust	Ⓔx II 3 G Ex nA nR IIC T4 Gc Ⓔx II 2 D Ex tb IIIC T80℃ Db IP66
Certificates	IECEx; ATEX
Conformity to standards	EN 60079-0, EN 60079-15, EN 60079-31 IEC 60079-0, IEC 60079-15, IEC 60079-31
Rated voltage	14.8V DC
Rated capacity	4Ah
Lamp(LED)	
Rated power	9W / 3W
Average service life	100000h
Continuous working time	
Strong light	≥8h
Working light	≥18h
Charging time	≥8h
Charging voltage	100~240V AC, 50/60Hz
Service life of battery	about 1000 times cycling
Degree of protection	IP66
Weight	1.9kg

Zones 2; 21&22

Hand Lamps
HRD503 Series Explosion-proof Maintenance Lamps



- Explosion protection to
  -CENELEC
  -IEC
  -NEC
- Can be used in
  Zone 1 and Zone 2
  Class I, Zone 1 and Zone 2
  Class I, Division 2, Groups A, B, C, D
- Safety First: Engineered with superior explosion-proof capabilities, it thrives in hazardous environments where flammable and explosive materials are present.
- Energy Efficient: Powered by LED technology, it consumes less energy, delivers high luminous efficacy, boasts a long service life, and requires no maintenance, eliminating future upkeep costs. The high-capacity non-memory battery is rechargeable, ensuring sustainability.
- Waterproof and Resilient: Constructed with alloy enclosure, it withstands impacts and collisions, maintaining its integrity.
- Versatile and Enduring: Featuring a three-section telescopic pole for height adjustment, the lamp head is thoughtfully designed for versatile angle adjustments, providing multi-directional, all-around illumination.
- Smart Control: Equipped with intense and working light modes, it utilizes a smart chip for seamless switching between intensities. The intelligent chip also safeguards against overcharging, over-discharging, and short circuits, protecting the battery and extending its life.
- Portable and Flexible: Its ergonomic design allows the telescopic pole to fold flat, making the lamp compact and easy to carry. The handle includes a designated spot for the pole, ensuring hassle-free movement and enhancing portability.

Technical data

Explosion-proof maintenance lamps HRD503

Explosion protection	
Global (IECEx)	IECEx (applied for)
Gas	Ex de IIC T6 Gb
Europe (ATEX)	ATEX (applied for)
Gas	Ⓔx II 2 G Ex de IIC T6 Gb
Certificates	IECEx; ATEX
Conformity to standards	EN 60079-0, EN 60079-1 IEC 60079-0, IEC 60079-1
Rated voltage	16V
Rated capacity	12.8Ah
Lamp(LED)	
Rated power	50W / 25W
Average service life	100000h
Continuous working time	
Strong light	≥8h
Working light	≥16h
Charging time	≥8h
Charging voltage	100~240V AC, 50/60Hz
Service life of battery	about 1000 times cycling
Degree of protection	IP66
Weight	8.6kg

Zones 1&2

Hand Lamps
BSX-60 Series Explosion-proof Incandescent Hand Lamps

- Explosion protection to
  - -CENELEC
  - -IEC
  - -NEC
- Can be used in
  - Zone 1 and Zone 2
  - Class I, Zone 1 and Zone 2
  - Class I, Division 2, Groups A, B, C, D
- Incandescent lamps: Max. 60W; LED: Max. 8W
- Cable on request
- Handle in plastic, with control pushbutton
- Powder coated wire guard, white
- Toughened glass cover resistant to temperature changes



Technical data

Explosion-proof incandescent hand lamps BSX-60

Explosion protection	
Global (IECEx)	IECEx CQM 08.0015
Gas and dust	Ex d e IIC T4
Europe (ATEX)	LCIE 07 ATEX 6028
Gas and dust	Ⓔx II 2 G Ex d e IIC T4
Certificates	IECEx; ATEX
Conformity to standards	EN 60079-0, EN 60079-1, EN 60079-7 IEC 60079-0, IEC 60079-1, IEC 60079-7
Material	
Enclosure	Copper-free Aluminium Alloy, powder coated surfacce, yellow (RAL1021)
Handle	Plastic, black
Wire guard	Stainless steel
Exposed fastener	Stainless steel
Lamp	
Lamp holder	E27
Available lamp	Incandescent lamp: 25W, 40W, 60W; LED: 3W, 5W, 8W
Rated voltage	Max. 230V
Protection class	II (Protection against electric shock)
Degree of protection	IP65
Ambient temperature	-20℃~+55℃
Terminal	3 x 1.5~2.5mm^2 (L+N+PE)
Cable entries	1 x M25 x 1.5 cable gland (DQM-I Ex e, plastic)
Available cable outer diameter	Φ9~Φ16 (mm)
Weight	2.35kg

Zones 1&2

Local, Caution Spotlight Fittings
BAJ52-20 Series Explosion-proof Emergency Light Fittings



- Explosion protection to
  -CENELEC
  -IEC
  -NEC
- Can be used in
  Zone 1 and Zone 2
  Class I, Zone 1 and Zone 2
  Class I, Division 1, Groups C, D
- Enclosure in Copper-free Aluminium Alloy, powder coated surface, yellow (RAL1021).
- Lighting angle can be adjusted.
- Low-power halogen tungsten lamps, with reflector to increase lighting intensity.
- Emergency device with Ni-MH batteries, charging automatically; when power supply is cut off, the emergency device starts to work; with overcharge and overdischarge protection.
- Toughened glass cover resistant to temperature changes.

WAROM

Zones 1&2

Technical data

Explosion-proof emergency light fittings BAJ52-20

Explosion protection	
Global (IECEx)	IECEx CQM 08. 0001
Gas	Ex d IIB T4
Europe (ATEX)	LCIE 07 ATEX 6086
Gas	Ⓔx II 2 G Ex d IIB T4
Certificates	IECEx; ATEX
Conformity to standards	EN 60079-0, EN 60079-1
	IEC 60079-0, IEC 60079-1
Material	
Enclosure	Copper-free Aluminium Alloy, powder coated surfacce, yellow (RAL1021)
Exposed fastener	Stainless steel
Rated voltage	220~240V AC 50/60Hz
Lamp	
Available lamp	Halogen tungsten lamp (LED on request)
Lamp power (W)	2 x 10W (LED lamp power: 2 x 1W)
Emergency time	90min
Rated luminous flux	Halogen tungsten lamp: 2 x 100lm (LED lamp: 2 x 90lm)
Battery	
Description	Ni-MH battery
Rated capacity	6Ah
Rated voltage	6V
Charging current	300mA
Discharging current	1000mA
Charging time	24h
Degree of protection	IP65
Ambient temperature	-20℃~+55℃
Terminal	3 x 1.5~2.5mm^2 (L+N+PE)
Cable entries	2 x M25 x 1.5 plugs
Cable gland (optional)	DQM-II (Ex d) or DQM-III (Ex d) is recommended. Please see P7/22~31.
Weight	5.05kg

Dimension drawings (all dimensions in mm) - subject to alteration

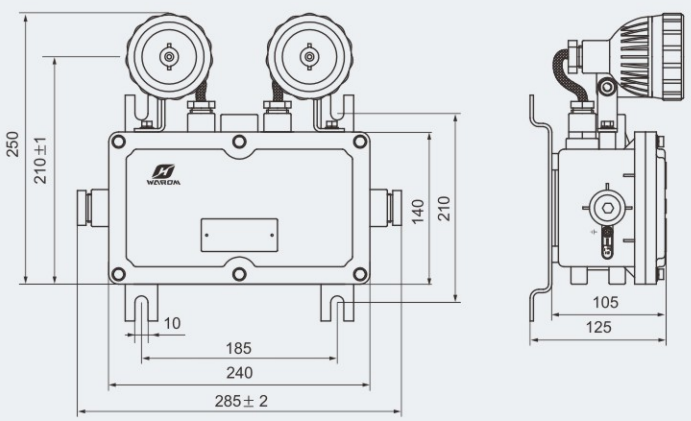

Local, Caution Spotlight Fittings
BAJ52-6 Series Explosion-proof Emergency Light Fittings



- Explosion protection to
  -CENELEC
  -IEC
  -NEC
- Can be used in
  Zone 1 and Zone 2
  Zone 21 and Zone 22
  Class I, Zone 1 and Zone 2
  Class I, Division 1, Groups A, B, C, D
- Enclosure in Copper-free Aluminium Alloy, powder coated surface, yellow (RAL1021).
- Lighting angle can be adjusted.
- Ultra-bright LED lamp, low power consumption and long service life up to 50,000 hours; energy saving and environmental protection.
- Emergency device with Ni-CD batteries, charging automatically; when power supply is cut off, the emergency device starts to work; with overcharge and overdischarge protection.
- Toughened glass cover resistant to temperature changes.

WAROM

Zones 1&2; 21&22

Technical data

Explosion-proof emergency light fittings BAJ52-6

Explosion protection	
Global (IECEx)	IECEx (applied for)
Gas and dust	Ex db IIC T6 Gb Ex tb IIIC T80℃ Gb
Europe (ATEX)	ATEX (applied for)
Gas and dust	Ⓔx II 2 G Ex db IIC T6 Gb Ⓔx II 2 D Ex tb IIIC T80℃ Db
Certificates	IECEx; ATEX
Conformity to standards	EN 60079-0, EN 60079-1, EN 60079-31 IEC 60079-0, IEC 60079-1, IEC 60079-31
Material	
Enclosure	Copper-free Aluminium Alloy, powder coated surfacce, yellow (RAL1021)
Exposed fastener	Stainless steel
Rated voltage	100~277V AC 50/60Hz
Lamp	
Lamp specification	LED
Lamp power (W)	2 x 3W
Emergency time	180min
Rated luminous flux	2 x 300lm
Battery	
Description	Ni-CD battery
Rated capacity	4Ah
Rated voltage	3.6V
Charging time	24h
Degree of protection	IP66
Ambient temperature	-40℃~+60℃
Terminal	3 x 1.5~2.5mm^2 (L+N+PE)
Cable entries	2 x M25 x 1.5 plugs
Cable gland (optional)	DQM-II (Ex d) or DQM-III (Ex d) is recommended. Please see P7/22~31.
Weight	8.0kg

Dimension drawings (all dimensions in mm) - subject to alteration

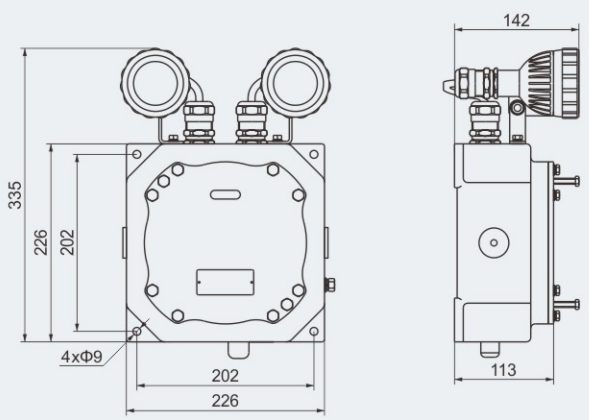

Local, Caution Spotlight Fittings
BAYD85 Series Explosion-proof Emergency Exit Light Fittings



- Explosion protection to
  -CENELEC
  -IEC
  -NEC
- Can be used in
  Zone 1 and Zone 2
  Zone 21 and Zone 22
  Class I, Zone 1 and Zone 2
  Class I, Division 1, Groups C, D
- Lighting both in normal condition and emergency condition; When power supply is cut off, the emergency device starts to work; with overcharge, overdischarge protection and short circuit protection.
- Designed with test button and sleep button. The test button is for testing. Press the button, lamp shall automatically enter into emergency status. The sleep button is to stop the lamp source output, press this button, the lamp turned off, re-press the button, lamp on and return to work.
- Ultra-bright LED lamp, low power consumption and long service life up to 50,000 hours; energy saving and environmental protection.
- Enclosure in Copper-free Aluminium Alloy, powder coated surface, yellow (RAL 1021).
- Toughened glass sheet resistant to temperature changes.

Catalogue number logic

BAYD85 - □□

- Sign code: A~G
- Mounting
  - G: pendant pole type
  - X: ceiling type
  - B: wall type
- Explosion-proof emergency exit light fittings

Sign code type A-G



Type A



Type B



Type C


Type D



Type E



Type F



Type G

Zones 1&2; 21&22

Technical data

Explosion-proof emergency exit light fittings BAYD85-□□

Explosion protection	
Global (IECEx)	IECEx CQM 16.0032X
Gas and dust	Ex db IIB T6 Gb (-60℃~+58℃/+60℃) Ex db IIC T6 Gb (-40℃~+58℃/+60℃) Ex tb IIIC T80℃ Db (-60℃~+58℃/+60℃)
Europe (ATEX)	TÜV CY 22 ATEX 0206697 X
Gas and dust	Ⓔx II 2 G Ex db IIB T6 Gb (-60℃~+58℃/+60℃) Ⓔx II 2 G Ex db IIC T6 Gb (-40℃~+58℃/+60℃) Ⓔx II 2 D Ex tb IIIC T80℃ Db (-60℃~+58℃/+60℃)
Certificates	IECEx; ATEX; CU-TR; INMETRO
Conformity to standards	EN 60079-0, EN 60079-1, EN 60079-31 IEC 60079-0, IEC 60079-1, IEC 60079-31
Material	
Enclosure	Copper-free Aluminium Alloy, powder coated surface, yellow(RAL1021)
Exposed fastener	Stainless steel
Rated voltage	100~300V AC 50/60Hz, 100~250V DC, 12~48V AC/DC
Lamp	LED lamp (working voltage DC 3.6V)
Power consumption	4W / 8W
Emergency time	180min
Battery	
Rated capacity	800mAh
Charging time	16h
Earthing protection	M5 (internal & external earth bolts)
Degree of protection	IP66
Ambient temperature	4W: IIB/IIIC for tamb: -60℃~+60℃ IIC for tamb: -40℃~+60℃ 8W: IIB/IIIC for tamb: -60℃~+58℃(others voltage) IIB/IIIC for tamb: -60℃~+60℃(12~48V AC/DC) IIC for tamb: -40℃~+58℃(others voltage) IIC for tamb: -40℃~+60℃(12~48V AC/DC)
Terminal	3 x 1.5~2.5mm^2 (L+N+PE)
Cable entries	2 x M25 x 1.5 plugs
Cable gland	DQM-II (Ex d) or DQM-III (Ex d) is recommended. Please see P7/22~31.
Weight	5.15kg

Dimension drawings (all dimensions in mm) - subject to alteration

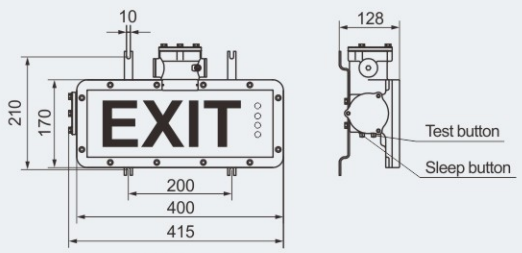

BAYD85-B

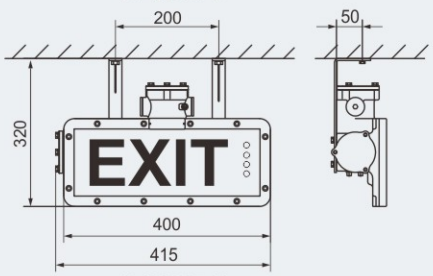

BAYD85-X

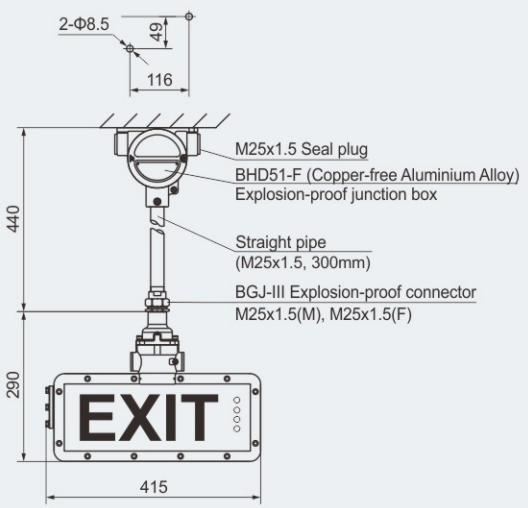

BAYD85-G

Local, Caution Spotlight Fittings
BAYD86 Series Explosion-proof Emergency Exit Light Fittings



- Explosion protection to
  -CENELEC
  -IEC
  -NEC
- Can be used in
  Zone 1 and Zone 2
  Zone 21 and Zone 22
  Class I, Zone 1 and Zone 2
  Class I, Division 1, Groups A, B, C, D
- Lighting both in normal condition and emergency condition; When power supply is cut off, the emergency device starts to work; with overcharge, overdischarge protection and short circuit protection.
- Designed with test button. Press the button, lamp shall automatically enter into emergency status.
- Ultra-bright LED lamp, low power consumption and long service life up to 50,000 hours; energy saving and environmental protection.
- Enclosure: GRP (glass fiber reinforced polyester).
- Toughened glass sheet resistant to temperature changes.

Catalogue number logic

BAYD86 - □□

- Sign code: A~G
- Mounting
  - G: pendant pole type
  - X: ceiling type
  - B: wall type
- Explosion-proof emergency exit light fittings

Sign code type A-G



Type A



Type B



Type C


Type D



Type E



Type F



Type G

Zones 1&2; 21&22

Technical data

Explosion-proof emergency exit light fittings BAYD86-□□

Explosion protection	
Global (IECEx)	IECEx (applied for)
Gas and dust	Ex mb eb ib IIC T6 Gb Ex tb IIIC T80℃ Db
Europe (ATEX)	ATEX (applied for)
Gas and dust	Ⓔx II 2 G Ex mb eb ib IIC T6 Gb Ⓔx II 2 D Ex tb IIIC T80℃ Db
Certificates	IECEx; ATEX
Conformity to standards	EN 60079-0, EN 60079-7, EN 60079-11, EN 60079-18, EN 60079-31 IEC 60079-0, IEC 60079-7, IEC 60079-11, IEC 60079-18, IEC 60079-31
Material	
Enclosure	GRP (glass fiber reinforced polyester)
Exposed fastener	Stainless steel
Rated voltage	100~277V AC 50/60Hz, 100~250V DC, 12~48V AC/DC
Lamp	LED lamp
Power consumption	8W
Emergency time	180min
Battery	
Rated capacity	800mAh
Charging time	16h
Earthing protection	M5 (internal & external earth bolts)
Degree of protection	IP66
Ambient temperature	-60℃~+60℃
Terminal	3 x 1.5~2.5mm^2 (L+N+PE)
Cable entries	2 x M25 x 1.5 plugs
Cable gland	DQM-I is recommended. Please see P7/18~21.
Weight	8.0kg

Dimension drawings (all dimensions in mm) - subject to alteration

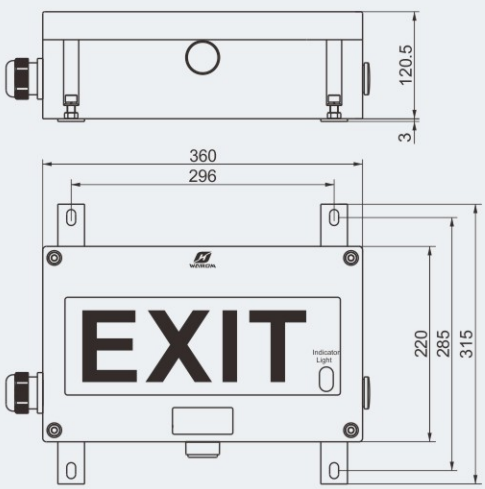

Local, Caution Spotlight Fittings
BAK51 Series Explosion-proof Tank Inspection Vessel Light Fittings



- Explosion protection to
  -CENELEC
  -IEC
  -NEC
- Can be used in
  Zone 1 and Zone 2
  Zone 21 and Zone 22
- Available for 35W or 50W halogen tungsten lamp, with high light efficiency and long service life.
- A or B mounting type is optional.
- Enclosure in Copper-free Aluminium Alloy, powder coated surface, yellow (RAL1021).

Catalogue number logic

BAK51 - □ / □ □

- Mounting: A: Type A; B: Type B
- Rated voltage (V): 240: 220~240V AC; 12: 12V DC
- Lamp power (W)
- Explosion-proof tank inspection vessel light fittings

Selection table

Type/Ordering code	Available lamp power (W)	Weight(kg)	Type/Ordering code	Available lamp power (W)	Weight(kg)
BAK51-35/240A	35W Halogen tungsten lamp	2.15	BAK51-50/240A	50W Halogen tungsten lamp	2.15
BAK51-35/240B		2.15	BAK51-50/240B		2.15
BAK51-35/12A		2.00	BAK51-50/12A		2.00
BAK51-35/12B		2.00	BAK51-50/12B		2.00

Zones 1&2; 21&22

Technical data

Explosion-proof tank inspection vessel light fittings BAK51-□/□□

Explosion protection	
Global (IECEx)	IECEx CNEX 18.0033X
Gas and dust	Ex db IIB T3 Gb
	Ex tb IIIC T190℃ Db
Europe (ATEX)	CNEX 18 ATEX 0026 X
Gas and dust	Ⓔx II 2 G Ex db IIB T3 Gb
	Ⓔx II 2 D Ex tb IIIC T190℃ Db
Certificates	IECEx; ATEX
Conformity to standards	EN 60079-0, EN 60079-1, EN 60079-31
	IEC 60079-0, IEC 60079-1, IEC 60079-31
Material	
Enclosure	Copper-free Aluminium Alloy, powder coated surface, yellow (RAL1021)
Glass cover	Toughened glass, impact resistance and high light transmission
Exposed fastener	Stainless steel
Lamp	
Available lamp	Halogen tungsten lamp
Lamp holder	GY6.35
Lamp power (W)	35W, 50W
Adaptable voltage	DC 12V
Rated voltage	220~240V AC 50Hz
	12V DC; 24V AC/DC
Earthing protection	M5 (internal & external earth bolts)
Degree of protection	IP66
Ambient temperature	-60℃~+60℃
Terminal	3 x 1.5~2.5mm^2 (L+N+PE)
Cable entries	1 x G3/4"
Cable gland	Supplied with seal gasket and gland nut, cable gland on request.
Applicable cable outer diameter	Φ10~Φ14 (mm)

Dimension drawings (all dimensions in mm) - subject to alteration

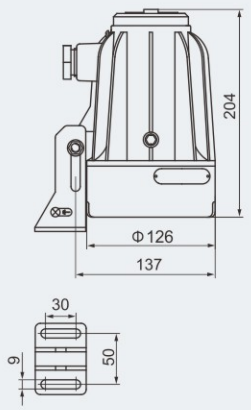

A

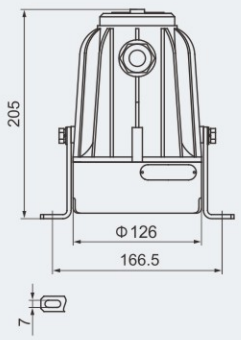

B

Local, Caution Spotlight Fittings
BAK85 Series Explosion-proof LED Tank Inspection Vessel Light Fittings



- Explosion protection to
  -CENELEC
  -IEC
  -NEC
- Can be used in
  Zone 1 and Zone 2
  Zone 21 and Zone 22
- Applicable lamp and power:
  LED lamps, energy-saving and long service life.
- Enclosure in Copper-free Aluminium Alloy, powder coated surface, yellow (RAL1021).

Catalogue number logic

BAK85 - □/□

- Rated voltage (V)
  - 277: 100~277V AC
  - 36: 12~36V AC
  - 48: 12~48V DC
- Lamp power (W)
- Explosion-proof LED tank inspection vessel light fittings

Selection table

Type/Ordering code	Lamp power (W)	Rated voltage (V)	Weight (kg)
BAK85-9/277	9	100~277V AC 50/60Hz	2.20
BAK85-9/36		12~36V AC	
BAK85-9/48		12~48V DC	

Zones 1&2; 21&22

Technical data

Explosion-proof LED tank inspection vessel light fittings BAK85-□/□

Explosion protection	
Global (IECEx)	IECEx TPS 18.0011X
Gas and dust	Ex db op is IIC T6 Gb Ex tb op is IIIC T80℃ Db
Europe (ATEX)	TPS 18 ATEX 089761 0007X
Gas and dust	Ⓔx II 2 G Ex db op is IIC T6 Gb Ⓔx II 2 D Ex tb op is IIIC T80℃ Db
Certificates	IECEx; ATEX
Conformity to standards	EN 60079-0, EN 60079-1, EN 60079-28, EN 60079-31 IEC 60079-0, IEC 60079-1, IEC 60079-28, IEC 60079-31
Material	
Enclosure	Copper-free Aluminium Alloy, powder coated surface, yellow (RAL1021)
Glass cover	Toughened glass, stands 4J impact
LED driver	Wide voltage input, CC-CV (constant current - constant voltage) output, power factor ≥0.95, with protection against circuit and anti-electromagnetic interference, etc.
Exposed fastener	Stainless steel
Lamp	
Lamp specification	International brand of LED module
Lamp power (W)	9W
Colour Temperature (CCT)	5700K Note: cool white is available in general. Warm white or nature white is optional, please specify when ordering.
Rated voltage	100~277V AC 50/60Hz 100~250V DC 12~36V AC 50/60Hz 12~48V DC
Earthing protection	M5 (internal & external earth bolts)
Degree of protection	IP66/IP67
Ambient temperature	-40℃~+55℃
Terminal	3 x 1.5~2.5mm^2 (L+N+PE)
Cable entries	M20 x 1.5
Cable gland	Supplied with seal gasket and gland nut
Applicable cable outer diameter	Φ6~Φ12 (mm)

Dimension drawings (all dimensions in mm) - subject to alteration

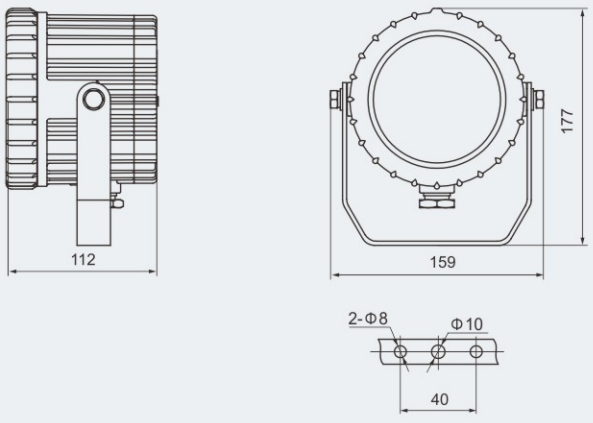

Local, Caution Spotlight Fittings
BSZD81-E Series Explosion-proof Caution Spotlight Fittings



- Explosion protection to
  -CENELEC
  -IEC
  -NEC
- Can be used in
  Zone 1 and Zone 2
  Zone 21 and Zone 22
  Class I, Zone 1 and Zone 2
  Class I, Division 2, Groups A, B, C, D
- Ultra-bright LED lamp, low consumption and long service life up to 50,000 hours, integrated chip control with various circuit protection.
- Synchronous flashing of light fittings through signal lines.
- Enclosure in Copper-free Aluminium Alloy, powder coated surface, yellow (RAL1021).

Catalogue number logic

BSZD81 - E □

- T: Wireless synchronous (optional)
- Lamp: LED (low luminous intensity)
- Explosion-proof caution spotlight fittings

Wired sync connection diagram

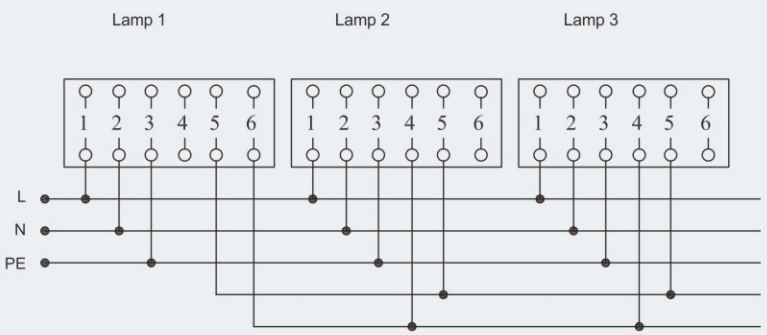

Zones 1&2; 21&22

Technical data

Explosion-proof caution spotlight fittings BSZD81-E □

Explosion protection	
Global (IECEx)	IECEx CQM 11.0026X
Gas and dust	Ex d e IIC T6 Gb Ex tb IIIC T80℃ Db IP65
Europe (ATEX)	EUT 14 ATEX 1155
Gas and dust	Ⓔx II 2 G Ex d e IIC T6 Gb Ⓔx II 2 D Ex tb IIIC T80℃ Db IP65
Certificates	IECEx; ATEX
Conformity to standards	EN 60079-0, EN 60079-1, EN 60079-7, EN 60079-31 IEC 60079-0, IEC 60079-1, IEC 60079-7, IEC 60079-31
Material	
Enclosure	Copper-free Aluminium Alloy, powder coated surface, yellow (RAL1021)
Transparent cover	Toughened glass, stands 4J impact
Exposed fastener	Stainless steel
Rated voltage	100V, 110V, 120V, 127V, 220V, 230V, 240V AC 50/60Hz
Lamp	
Lamp specification	LED
Lamp power (W)	⩽10W (continuous work)
Lamp colour	Red
Max. luminous intensity value	>200cd
Flash frequency	16, 20, 30, 40, 60, 80, 120, 240 (times/min)
Earthing protection	M5 (internal & external earth bolts)
Degree of protection	IP65
Ambient temperature	-20℃~+55℃
Terminal	3 x 1.5~2.5mm^2 (L+N+PE)
Cable entries	4 x M25 x 1.5 plugs
Cable gland (optional)	DQM-I (Ex e) is recommended. Please see P7/19~21.
Weight	10kg

Dimension drawings (all dimensions in mm) - subject to alteration

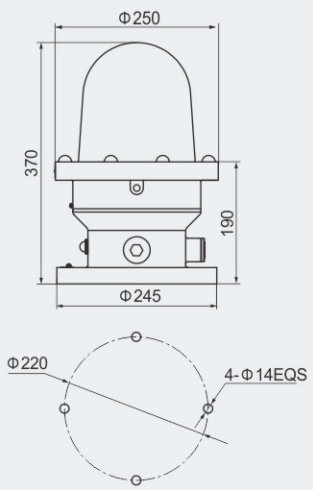

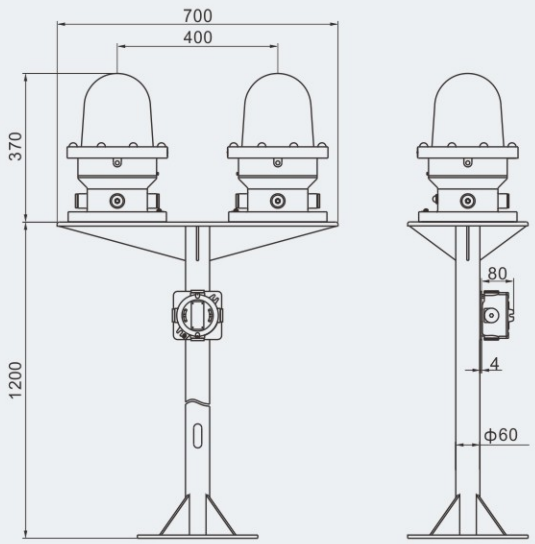

Drawings of main (spare) caution spotlight fittings

Note: The light fitting consists of two completely independent photoelectric control systems which can control the main and spare lamps respectively. Generally, the main lamp is used for night lighting, and it will be shut down automatically during the day. If the main lamp is damaged, the spare lamp will be started automatically to be substituted for main lamp.

Local, Caution Spotlight Fittings
BSZD81-C Series Explosion-proof Caution Spotlight Fittings



- Explosion protection to
  -CENELEC
  -IEC
  -NEC
- Can be used in
  Zone 1 and Zone 2
  Zone 21 and Zone 22
  Class I, Zone 1 and Zone 2
  Class I, Division 2, Groups A, B, C, D
- Ultra-bright LED lamp, low consumption and long service life up to 30,000 hours, integrated chip control with various circuit protection.
- Synchronous flashing of light fittings through signal lines.
- Enclosure in Copper-free Aluminium Alloy, powder coated surface, yellow (RAL1021).

Catalogue number logic

BSZD81 - C □

- T: Wireless synchronous (optional)
- Lamp: LED (medium luminous intensity)
- Explosion-proof caution spotlight fittings

Wired sync connection diagram

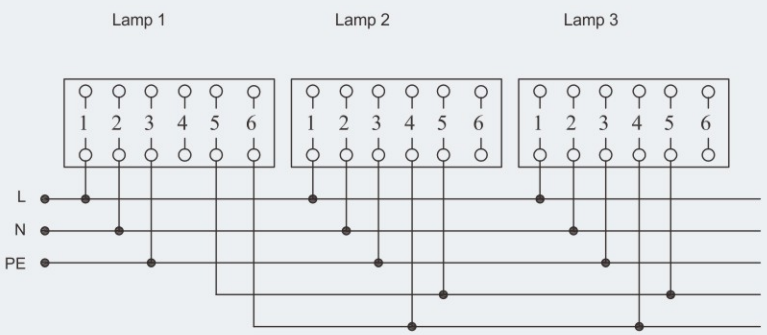

Zones 1&2; 21&22

Technical data

Explosion-proof caution spotlight fittings BSZD81-C □

Explosion protection	
Global (IECEx)	IECEx CQM 11.0026X
Gas and dust	Ex d e IIC T6 Gb Ex tb IIIC T80℃ Db IP65
Europe (ATEX)	EUT 14 ATEX 1155
Gas and dust	Ⓔx II 2 G Ex d e IIC T6 Gb Ⓔx II 2 D Ex tb IIIC T80℃ Db IP65
Certificates	IECEx; ATEX
Conformity to standards	EN 60079-0, EN 60079-1, EN 60079-7, EN 60079-31 IEC 60079-0, IEC 60079-1, IEC 60079-7, IEC 60079-31
Material	
Enclosure	Copper-free Aluminium Alloy, powder coated surface, yellow (RAL1021)
Transparent cover	Toughened glass, stands 4J impact
Exposed fastener	Stainless steel
Rated voltage	100V, 110V, 120V, 127V, 220V, 230V, 240V AC 50/60Hz
Lamp	
Lamp specification	LED
Lamp power (W)	40W (continuous work)
Lamp colour	Red
Max. luminous intensity value	> 2000cd
Flash frequency	16, 20, 30, 40, 60, 80, 120, 240 (times/min)
Earthing protection	M5 (internal & external earth bolts)
Degree of protection	IP65
Ambient temperature	-40℃~+55℃
Terminal	3 x 1.5~2.5mm^2 (L+N+PE)
Cable entries	4 x M25 x 1.5 plugs
Cable gland (optional)	DQM-I (Ex e) is recommended. Please see P7/19~21.
Weight	13.8kg

Dimension drawings (all dimensions in mm) - subject to alteration

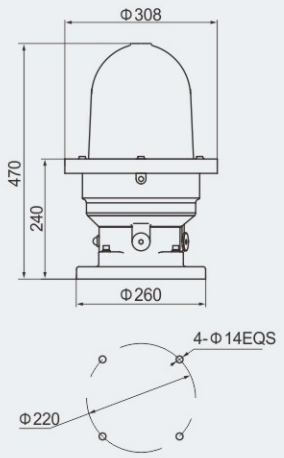

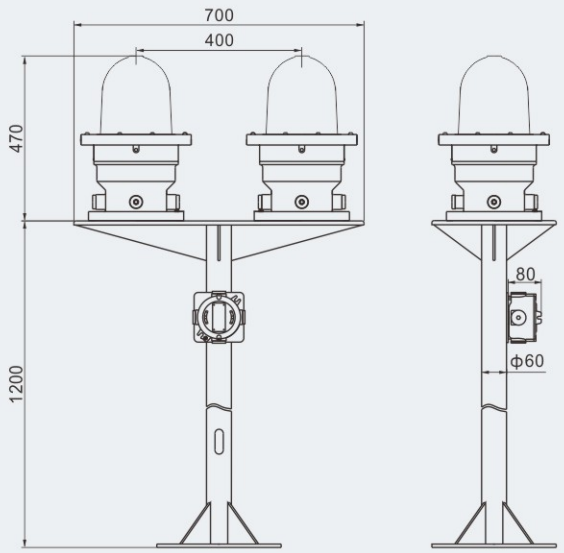

Drawings of main (spare) caution spotlight fittings

Note: The light fitting consists of two completely independent photoelectric control systems which can control the main and spare lamps respectively. Generally, the main lamp is used for night lighting, and it will be shut down automatically during the day. If the main lamp is damaged, the spare lamp will be started automatically to be substituted for main lamp.

Local, Caution Spotlight Fittings
BSZD85-E Series Explosion-proof Low Intensity Aircraft Warning Light



- Explosion protection to
  -CENELEC
  -IEC
  -NEC
- Can be used in
  Zone 1 and Zone 2
  Zone 21 and Zone 22
  Class I, Zone 1 and Zone 2
  Class I, Division 2, Groups A, B, C, D
- Ultra-bright LED lamp, low consumption and long service life up to 50,000 hours, integrated chip control with various circuit protection.
- Synchronous flashing of light fittings through signal lines.
- Enclosure in Copper-free Aluminium Alloy, powder coated surface, yellow (RAL1021).

Catalogue number logic

BSZD85 - E

- E: Lamp: LED (low luminous intensity)
- BSZD85: Explosion-proof aircraft warning light

WAROM

Zones 1&2; 21&22

Technical data

Explosion-proof low intensity aircraft warning light BSZD85-E

Explosion protection	
Global (IECEx)	IECEx NEP 22.0008X
Gas and dust	Ex db IIC T6 Gb Ex tb IIIC T80℃ Db
Europe (ATEX)	ExVeritas 22 ATEX1 399X
Gas and dust	Ⓔx II 2 G Ex db IIC T6 Gb Ⓔx II 2 D Ex tb IIIC T80℃ Db
Certificates	IECEx; ATEX; CU-TR
Conformity to standards	EN 60079-0, EN 60079-1, EN 60079-31 IEC 60079-0, IEC 60079-1, IEC 60079-31
Certificates	International Civil Aviation Organization Certification: ICAO
Conformity to standard	International Civil Aviation Organization (ICAO)
Verification number	104406281CRT-001TVOC
Optical requirements	horizontal beam spread 360°, normal beam spread ≥10°; when the angle of elevation is between 2~10°, the lowest light intensity ≥32cd, other angles ≥16cd.
Material	
Enclosure	Copper-free Aluminium Alloy, powder coated surface, yellow (RAL1021)
Transparent cover	Toughened glass, stands 4J impact
Exposed fastener	Stainless steel
Rated voltage	100~277V AC/DC, 12~48V AC/DC
Lamp	
Lamp specification	LED
Lamp power (W)	⩽8W (continuous work)
Lamp colour	Red
Max. luminous intensity value	> 32cd
Flash frequency	Normally on
Earthing protection	M5 (internal & external earth bolts)
Degree of protection	IP66
Ambient temperature	-60℃~+60℃
Terminal	3 x 1.5~2.5mm^2 (L+N+PE)
Cable entries	2 x M25 x 1.5 plugs
Cable gland (optional)	BPT
Weight	2.7kg

Dimension drawings (all dimensions in mm) - subject to alteration

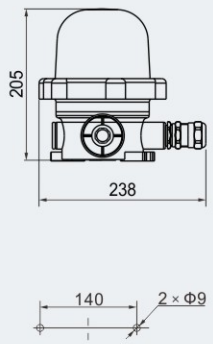

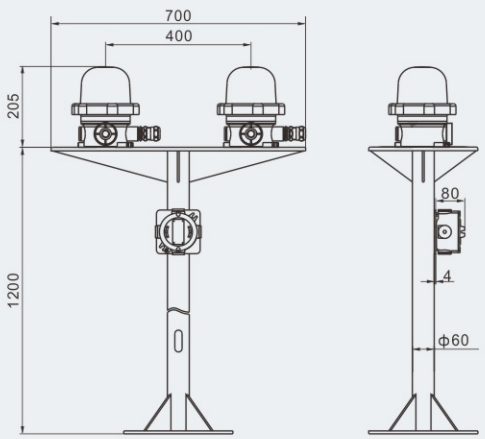

Drawings of main (spare) caution spotlight fittings

Note: The light fitting consists of two completely independent photoelectric control systems which can control the main and spare lamps respectively. Generally, the main lamp is used for night lighting, and it will be shut down automatically during the day. If the main lamp is damaged, the spare lamp will be started automatically to be substituted for main lamp.

Local, Caution Spotlight Fittings
BSZD85-C Series Explosion-proof Medium Intensity Aircraft Warning Light



- Explosion protection to
  -CENELEC
  -IEC
  -NEC
- Can be used in
  Zone 1 and Zone 2
  Zone 21 and Zone 22
  Class I, Zone 1 and Zone 2
  Class I, Division 2, Groups A, B, C, D
- Ultra-bright LED lamp, low consumption and long service life up to 30,000 hours, integrated chip control with various circuit protection.
- Synchronous flashing of light fittings through signal lines.
- Enclosure in Copper-free Aluminium Alloy, powder coated surface, yellow (RAL1021).

Catalogue number logic

BSZD85 - C □

- Y: Wire synchronous
- T: Wireless synchronous (optional)
- Lamp: LED (medium luminous intensity)
- Explosion-proof aircraft warning light

Wired sync connection diagram

Y: Wire synchronous

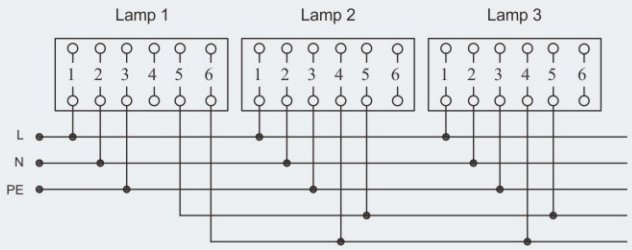

T: Wireless synchronous (optional)

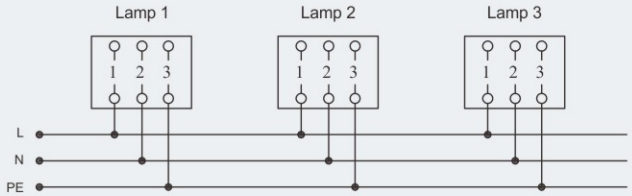

Zones 1&2; 21&22

Local, Caution Spotlight Fittings
BSZD85-C Series Explosion-proof Medium Intensity Aircraft Warning Light

Technical data

Explosion-proof medium intensity aircraft warning light BSZD85-C □

Explosion protection	
Global (IECEx)	IECEx NEP 23.0026X
Gas and dust	Ex db eb ib IIC T6 Gb Ex tb IIIC T80℃ Db
Europe (ATEX)	ATEX (applied for)
Gas and dust	Ⓔx II 2 G Ex db eb ib IIC T6 Gb Ⓔx II 2 D Ex tb IIIC T80℃ Db
Certificates	IECEx; ATEX; CU-TR
Conformity to standards	EN 60079-0, EN 60079-1, EN 60079-7, EN 60079-11, EN 60079-31 IEC 60079-0, IEC 60079-1, IEC 60079-7, IEC 60079-11, IEC 60079-31
Certificates	International Civil Aviation Organization Certification: ICAO
Conformity to standard	International Civil Aviation Organization (ICAO)
Verification number	104416588CRT-001TVOC
Optical requirements	horizontal beam spread 360°, normal beam spread ≥3°; when the angle of elevation is between -1~2°or 0°, the light intensity 2500cd ≥ I ≥1500cd, other angles 2500cd ≥ I ≥750cd.
Material	
Enclosure	Copper-free Aluminium Alloy, powder coated surface, yellow (RAL1021)
Transparent cover	Toughened glass, stands 4J impact
Exposed fastener	Stainless steel
Rated voltage	100~277V AC/DC 50/60Hz, 12~48V AC 50/60Hz; 100~277V DC, 12~48V DC
Lamp	
Lamp specification	LED
Lamp power (W)	⩽40W (continuous work)
Lamp colour	Red
Max. luminous intensity value	＞2000cd
Flash frequency	20~60 (times/min)
Earthing protection	M5 (internal & external earth bolts)
Degree of protection	IP66
Ambient temperature	-40℃~+53℃
Terminal	3 x 1.5~2.5mm² (L+N+PE)
Cable entries	4 x M25 x 1.5 plugs
Cable gland (optional)	BPT
Weight	6.0kg

Dimension drawings (all dimensions in mm) - subject to alteration

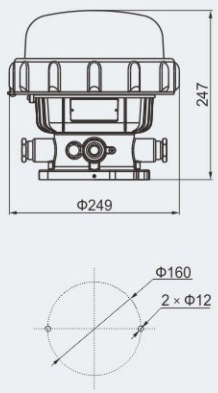

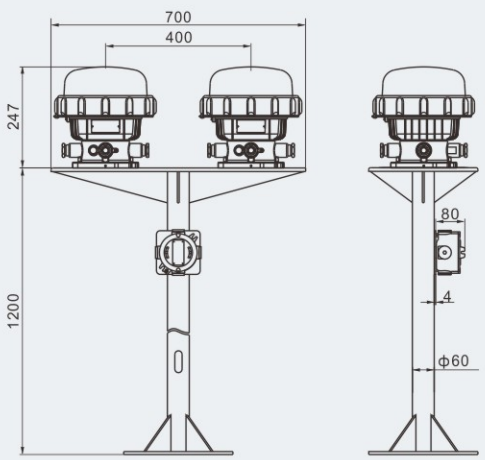

Drawings of main (spare) caution spotlight fittings

Note: The light fitting consists of two completely independent photoelectric control systems which can control the main and spare lamps respectively. Generally, the main lamp is used for night lighting, and it will be shut down automatically during the day. If the main lamp is damaged, the spare lamp will be started automatically to be substituted for main lamp.

Local, Caution Spotlight Fittings
BBJ81 Series Explosion-proof Audio and Visual Caution Spotlight Fittings



- Explosion protection to
  -CENELEC
  -IEC
  -NEC
- Can be used in
  Zone 1 and Zone 2
  Zone 21 and Zone 22
  Class I, Zone 1 and Zone 2
  Class I, Division 1, Groups A, B, C, D
- Ultra-bright LED lamp, low power consumption and long service life.
- Lamp colours: red, blue, yellow, green.
- Enclosure in Copper-free Aluminium Alloy, powder coated surface, yellow (RAL1021).

Catalogue number logic

BBJ81 - □

- Lamp colour
  - R: red
  - B: blue
  - Y: yellow
  - G: green
- Explosion-proof audio and visual caution spotlight fittings

Selection table

Type/Ordering code	Weight(kg)
BBJ81-R	2.60
BBJ81-B	2.60
BBJ81-Y	2.60
BBJ81-G	2.60

Zones 1&2; 21&22

Technical data

Explosion-proof audio and visual caution spotlight fittings BBJ81-□

Explosion protection	
Global (IECEx)	IECEx CQM 12.0035X
Gas and dust	Ex db ib IIC T6 Gb Ex tb IIIC T80℃ Db
Europe (ATEX)	LCIE 11 ATEX 3111X
Gas and dust	Ⓔx II 2 G Ex d ib IIC T6 Gb Ⓔx II 2 D Ex t IIIC T80℃ Db IP66
Certificates	IECEx; ATEX; CU-TR
Conformity to standards	EN 60079-0, EN 60079-1, EN 60079-11, EN 60079-31 IEC 60079-0, IEC 60079-1, IEC 60079-11, IEC 60079-31
Material	
Enclosure	Copper-free Aluminium Alloy, powder coated surface, yellow (RAL1021)
Transparent cover	Toughened glass, stands 4J impact
Exposed fastener	Stainless steel
Rated voltage	IECEx: 220~240V AC 50/60Hz; 100~120V AC 50/60Hz; 24V DC/AC ATEX: 220~240V AC 50/60Hz; 24V DC/AC
Lamp	
Lamp specification	LED
Lamp power (W)	5W
Lamp colour	Red, blue, yellow, green
Flash frequency	70 (times/min)
Sound intensity	85~105dB (R=1m)
Earthing protection	M5 (internal & external earth bolts)
Degree of protection	IP66
Ambient temperature	-40℃~+55℃
Terminal	3 x 1.5~2.5mm^2 (L+N+PE)
Cable entries	3 x M25 x 1.5 plugs
Cable gland (optional)	DQM-II (Ex d) or DQM-III (Ex d) is recommended. Please see P7/22~31.

Dimension drawings (all dimensions in mm) - subject to alteration

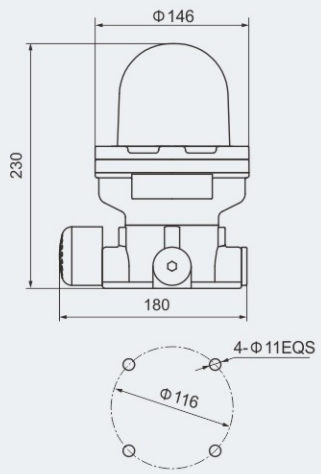

Local, Caution Spotlight Fittings
BJD81 Series Explosion-proof Caution Spotlight Fittings



- Explosion protection to
  -CENELEC
  -IEC
  -NEC
- Can be used in
  Zone 1 and Zone 2
  Zone 21 and Zone 22
  Class I, Zone 1 and Zone 2
  Class I, Division 1, Groups A, B, C, D
- Ultra-bright LED lamp, low power consumption and long service life.
- Lamp colour: red, blue, yellow, green.
- Enclosure in Copper-free Aluminium Alloy, powder coated surface, yellow (RAL1021).

Catalogue number logic

BJD81 - □

- Lamp colour
  - R: red
  - B: blue
  - Y: yellow
  - G: green
- Explosion-proof caution spotlight fittings

Selection table

Type/Ordering code	Weight(kg)
BJD81-R	2.50
BJD81-B	2.50
BJD81-Y	2.50
BJD81-G	2.50

Zones 1&2; 21&22

Technical data

Explosion-proof caution spotlight fittings BJD81-□

Explosion protection	
Global (IECEx)	IECEx CQM 12.0038X
Gas and dust	Ex db IIC T6 Gb Ex tb IIIC T80℃ Db
Europe (ATEX)	LCIE 11 ATEX 3109X
Gas and dust	Ⓔx II 2 G Ex d IIC T6 Gb Ⓔx II 2 D Ex t IIIC T80℃ Db IP66
Certificates	IECEx; ATEX; CU-TR
Conformity to standards	EN 60079-0, EN 60079-1, EN 60079-31 IEC 60079-0, IEC 60079-1, IEC 60079-31
Material	
Enclosure	Copper-free Aluminium Alloy, powder coated surface, yellow (RAL1021)
Transparent cover	Toughened glass, stands 4J impact
Exposed fastener	Stainless steel
Rated voltage	IECEx: 220~240V AC 50/60Hz; 100~120V AC 50/60Hz; 24V DC/AC ATEX: 220~240V AC 50/60Hz; 24V DC/AC
Lamp	
Lamp specification	LED
Lamp power (W)	3W
Lamp colour	Red, blue, yellow, green
Flash frequency	70 (times/min)
Earthing protection	M5 (internal & external earth bolts)
Degree of protection	IP66
Ambient temperature	-40℃~+55℃
Terminal	3 x 1.5~2.5mm^2 (L+N+PE)
Cable entries	4 x M25 x 1.5 plugs
Cable gland (optional)	DQM-II (Ex d) or DQM-III (Ex d) is recommended. Please see P7/22~31.

Dimension drawings (all dimensions in mm) - subject to alteration

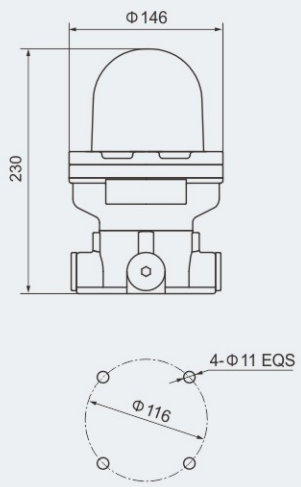

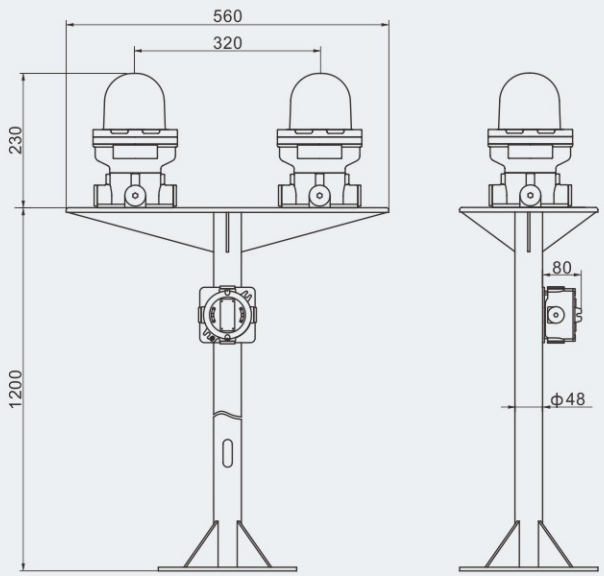

Drawings of main (spare) caution spotlight fittings

The light fitting consists of two completely independent lamp circuit boards which can control the main and spare lamps respectively. Generally, the main lamp is working. If the main lamp is damaged, the spare lamp will be started automatically to be substituted for main lamp.

Local, Caution Spotlight Fittings
BBJ86 Series Explosion-proof Audio and Visual Caution Spotlight Fittings



- Explosion protection to
  - -CENELEC
  - -IEC
  - -NEC
- Can be used in
  - Zone 1 and Zone 2
  - Zone 21 and Zone 22
  - Class I, Zone 1 and Zone 2
  - Class I, Division 1, Groups A, B, C, D
- Ultra-bright LED lamp, low power consumption and long service life.
- Lamp colours: red, blue, yellow, green.
- Enclosure in Copper-free Aluminium Alloy, powder coated surface, yellow (RAL1021).

Catalogue number logic

BBJ86 - □ □

- Lamp colour
  - R: red
  - B: blue
  - Y: yellow
  - G: green
- Function
  - 01: Sound and light
  - 02: Sound only
  - 03: Light only
- Explosion-proof audio and visual caution spotlight fittings

Selection table

Type/ Ordering code	Rated power (W)	Weight (kg)	Type/ Ordering code	Rated power (W)	Weight (kg)	Type/ Ordering code	Rated power (W)	Weight (kg)
BBJ86-01R	45W	4.70	BBJ86-02	35W	3.20	BBJ86-03R	10W	3.45
BBJ86-01B	45W	4.70				BBJ86-03B	10W	3.45
BBJ86-01Y	45W	4.70				BBJ86-03Y	10W	3.45
BBJ86-01G	45W	4.70				BBJ86-03G	10W	3.45

Zones 1&2; 21&22

Technical data

Explosion-proof audio and visual caution spotlight fittings BBJ86-□□

Explosion protection	
Global (IECEx)	IECEx PCET 24.0028X
Gas and dust	Ex db IIC T6 Gb Ex tb IIIC T80℃ Db
Europe (ATEX)	ATEX (applied for)
Gas and dust	Ⓔx II 2 G Ex db IIC T6 Gb Ⓔx II 2 D Ex tb IIIC T80℃ Db
Certificates	IECEx; ATEX
Conformity to standards	EN 60079-0, EN 60079-1, EN 60079-31 IEC 60079-0, IEC 60079-1, IEC 60079-31
Material	
Enclosure	Copper-free Aluminium Alloy, powder coated surface, yellow (RAL1021)
Transparent cover	Toughened glass, stands 4J impact
Exposed fastener	Stainless steel
Rated voltage	100~277V AC 50/60Hz; 130~250V DC; 12~48V AC/DC
Lamp	
Lamp specification	LED
Lamp power (W)	45W, 35W, 10W
Lamp colour	Red, blue, yellow, green
Flash frequency	150~160 (times/min)
Sound intensity	110~120dB (R=1m)
Earthing protection	M5 (internal & external earth bolts)
Degree of protection	IP66
Ambient temperature	-60℃~+60℃
Terminal	3 x 1.5~2.5mm^2 (L+N+PE)
Cable entries	3 x M25 x 1.5 plugs
Cable gland (optional)	DQM-II (Ex d) or DQM-III (Ex d) is recommended. Please see P7/22~31.

Dimension drawings (all dimensions in mm) - subject to alteration

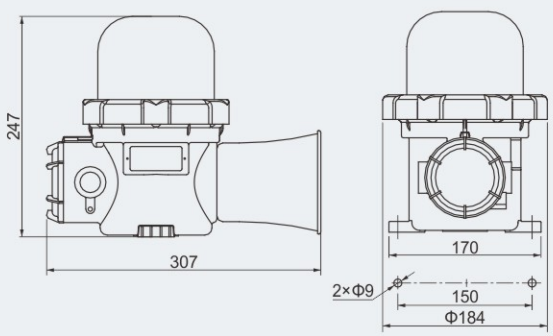

BBJ86-01□ Sound and Light

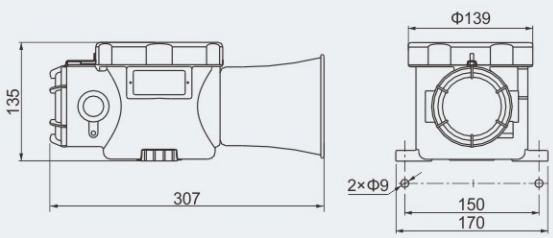

BBJ86-02□ Sound only

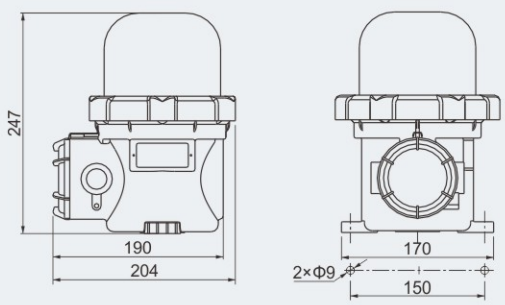

BBJ86-03□ Light only

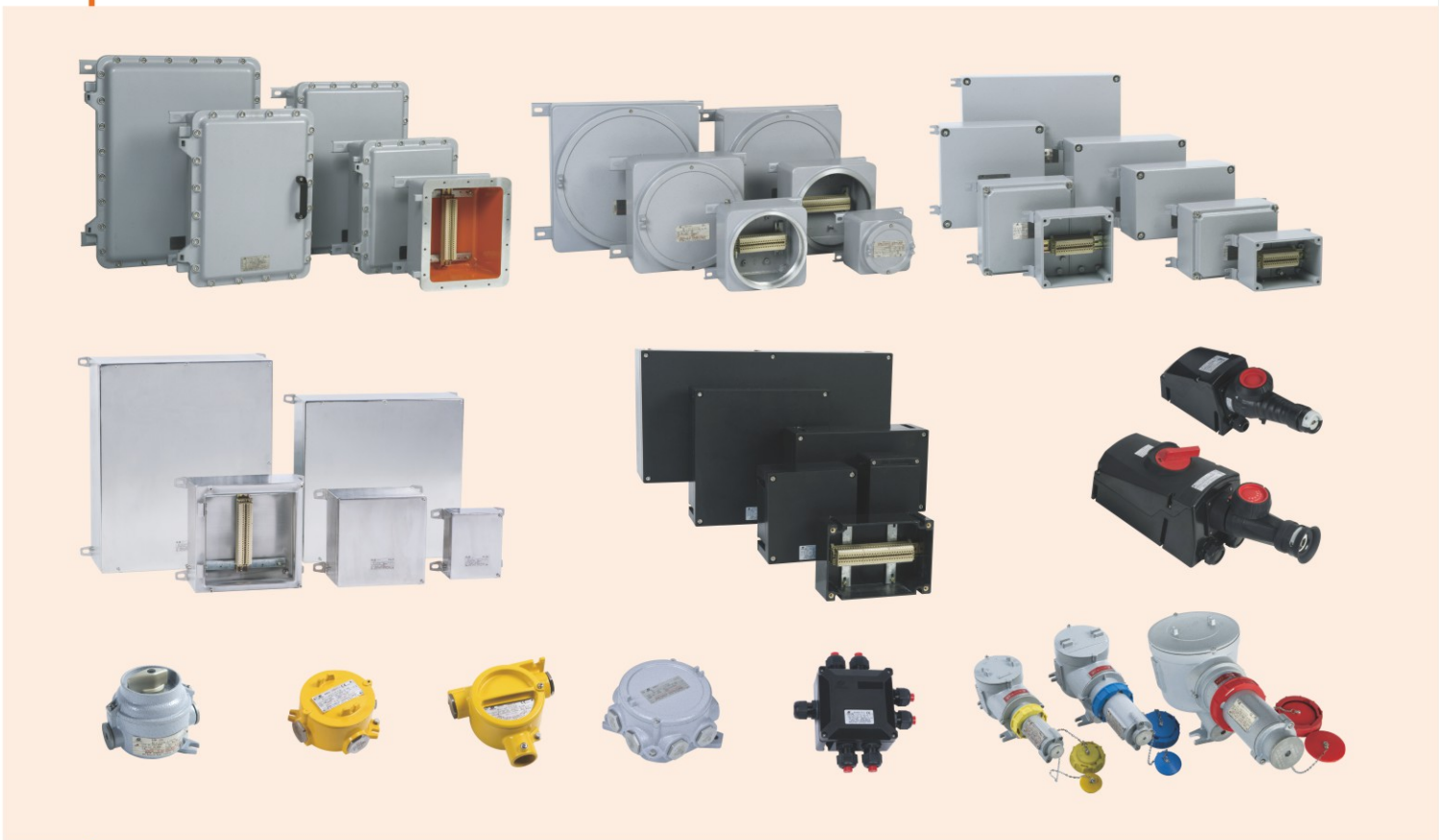

Installation Equipments

Contents

Installation Switches

BZM Series Explosion-proof Illumination Switches (Ex db IIC) 3/2

Junction Boxes

BHD51 Series Explosion-proof Junction Boxes (Ex db IIC) 3/4

BHD91 Series Explosion-proof Junction Boxes (Ex db IIC) 3/6

Terminal Boxes

BXJ-IIB Series Explosion-proof Terminal Boxes (Ex db IIB+H_2) 3/9

BXJ-IIC Series Explosion-proof Terminal Boxes (Ex d IIC) 3/12

BXJ-e Series Terminal Boxes (Ex e IIC, Ex ib IIC) 3/14

BXJ8050 Series Terminal Boxes (Ex e IIC, Ex ia IIC) 3/18

BXJ8050 Series Terminal Boxes (Ex eb IIC, Ex eb mb IIC) 3/22

BXJ8050-20/6 Series Junction Boxes (Ex e) 3/24

BXJ-S Series Terminal Boxes (Ex eb IIC, Ex ia IIC) 3/26

BXJ-91 Series Explosion-proof High-Voltage Junction Boxes (Ex eb IIC, Ex ec IIC) 3/32

BXJ-92 Series Explosion-proof High-Voltage Junction Boxes (Ex db IIB) 3/34

BXJ-93 Series Explosion-proof Fiber Optic Boxes (Ex op pr IIC, Ex op pr db eb IIC) 3/36

BXJ-95 Series Explosion-proof High-Voltage Junction Boxes (Ex db IIB+H_2) 3/38

Plugs and Sockets

Introduction of the voltage, number of pole, clock position and colour of explosion-proof plugs and sockets 3/40

BCZ8060 Series Explosion-proof Plugs and Sockets (Ex db eb IIC) 3/42

BCZ85 Series Explosion-proof Plugs and Sockets (Ex db IIC) 3/50

BLJ85 Series Explosion-proof Connector (Ex ec IIC) 3/56

More products are under development. Please contact us or visit our website for the latest product development. We reserve the right to make alteration to the technical data, weight, dimensions, designs and products available without notice.

Installation Switches
BZM Series Explosion-proof Illumination Switches



- Explosion protection to
  - -CENELEC
  - -IEC
  - -NEC
- Can be used in
  - Zone 1 and Zone 2
  - Zone 21 and Zone 22
  - Class I, Zone 1 and Zone 2
  - Class I, Division 1, Groups A, B, C, D
- Copper-free Aluminium Alloy enclosure, powder coated surface.
- Two options:
  - -On-off switch
  - -Changeover switch

Catalogue number logic

BZM - □□

- Switch type (B: on-off switch D: changeover switch)
- Rated current (A)
- Explosion-proof illumination switches

Selection table

Type/Ordering code	Chart of contact	Corresponding switch	Weight (kg)
BZM-16B		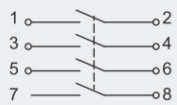	0.85
BZM-25B			0.95
BZM-16D	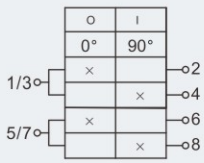	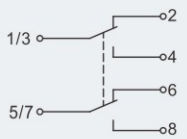	0.85
BZM-25D			0.95

Zones 1&2; 21&22

Technical data

Explosion-proof illumination switches BZM-□□

Explosion protection	
Global (IECEx)	IECEx LCI 08. 0008X
Gas and dust	Ex db IIC T6 Gb
	Ex tb IIIC T80℃ Db
Europe (ATEX)	LCIE 06 ATEX 6068X
Gas and dust	Ⓔx II 2 G Ex db IIC T6 Gb
	Ⓔx II 2 D Ex tb IIIC T80℃ Db
Certificates	IECEx; ATEX; CU-TR
Conformity to standards	EN 60079-0, EN 60079-1, EN 60079-31
	IEC 60079-0, IEC 60079-1, IEC 60079-31
Enclosure material	Copper-free Aluminium Alloy, powder coated surface
Enclosure colour	Window grey (RAL7040)
Switch function	On-off switch or changeover switch
Exposed fastener	Stainless steel
Rated voltage	Max. 250V AC
Rated current	16A, 25A
Degree of protection	IP66
Ambient temperature	-60℃~+60℃
Internal&external earthing	M4/M5
Cable connection	3 x (2.5~4)mm²
Cable entries	Standard 2 x M25 x 1.5 plugs
	2 x NPT3/4" plugs on request
Cable gland(optional)	DQM-II (Ex d) or DQM-III (Ex d) is recommended. Please see P7/22~31.

Spare parts

Built-in switch	Rated voltage/current	Ordering code	Weight (kg)
	250V/16A	30001	0.10
	250V/25A	30002	0.20
	250V/16A	30003	0.10
	250V/25A	30004	0.20

Dimension drawings (all dimensions in mm) - subject to alteration

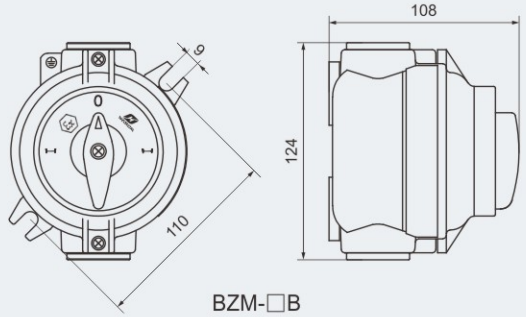

BZM-□B

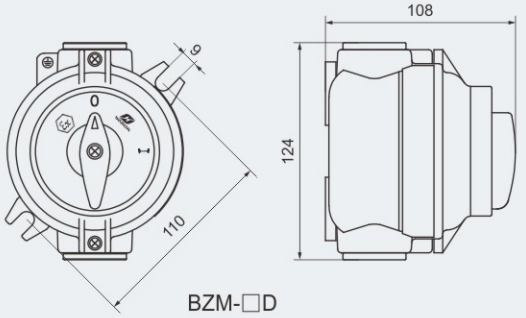

BZM-□D

Junction Boxes
BHD51 Series Explosion-proof Junction Boxes



- Explosion protection to
  - -CENELEC
  - -IEC
  - -NEC
- Can be used in
  - Zone 1 and Zone 2
  - Zone 21 and Zone 22
  - Class I, Zone 1 and Zone 2
  - Class I, Division 1, Groups A , B, C, D
- Six types: A, B, C, D, E, F.
- Type A, B, C, D, E in Copper-free Aluminium Alloy only; Type F in Copper-free Aluminium Alloy or Cast Iron.

Catalogue number logic

BHD51 - □ / □/ □

- T: cast iron (only for Type F)
- Thread (M, NPT)
- Outline code (A, B, C, D, E, F)
- Explosion-proof junction boxes

Selection table

Type/Ordering code	Schematic diagram	Weight (kg)	
BHD51-A/M20 x 1.5	Type A 	0.70	
BHD51-A/M25 x 1.5			
BHD51-B/M20 x 1.5	Type B 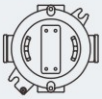	0.70	
BHD51-B/M25 x 1.5			
BHD51-C/M20 x 1.5	Type C 	0.70	
BHD51-C/M25 x 1.5			
BHD51-D/M20 x 1.5	Type D 	0.70	
BHD51-D/M25 x 1.5			
BHD51-E/M20 x 1.5	Type E 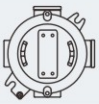	0.70	
BHD51-E/M25 x 1.5			
BHD51-F/M25 x 1.5	Type F 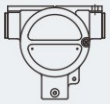	Copper-free Aluminium Alloy	0.80
		Cast Iron	2.10

Zones 1&2; 21&22

Technical data

Explosion-proof junction boxes BHD51-□/□/□

Explosion protection	
Global (IECEx)	IECEx CQM 11.0022X
Gas and dust	Ex db IIC T6 Gb Ex tb IIIC T80℃ Db
Europe (ATEX)	CNEX 21 ATEX 0001X
Gas and dust	Ⓔx II 2 G Ex db IIC T6 Gb Ⓔx II 2 D Ex tb IIIC T80℃ Db
Certificates	IECEx; ATEX
Conformity to standards	EN 60079-0, EN 60079-1, EN 60079-31 IEC 60079-0, IEC 60079-1, IEC 60079-31
Enclosure material	Copper-free Aluminium Alloy or cast iron, powder coated surface
Enclosure colour	Yellow (RAL1021)
Exposed fastener	Stainless steel
Rated current	20A
Rated voltage	Max. 690V AC 50/60Hz, Max. 500V DC
Terminal data	
Number	6 terminals (Type A-E), 4 terminals (Type F)
Cross section of cable	0.2~2.5mm^2
Degree of protection	IP66
Ambient temperature	-60℃~+60℃
Internal&external earthing	M5
Cable entries	Standard M□ x 1.5 plug NPT□ plug on request
Cable gland(optional)	DQM-II (Ex d) or DQM-III (Ex d) is recommended. Please see P7/22~31.
Main application	Type A-E are used for wiring or branching; Type F is used as accessory for pendant pole type or ceiling type light fittings.

Terminals

Description	Illustration	Number	Ordering code	Weight (kg)	Note
Terminal		6	30008	0.10	For Type A, B, C, D, E
Terminal block		4	30009	0.05	For Type F

Dimension drawings (all dimensions in mm) - subject to alteration

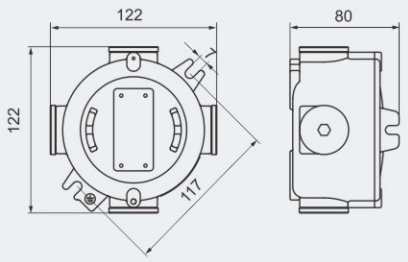

Type A, B, C, D, E

Copper-free Aluminium Alloy Cast iron

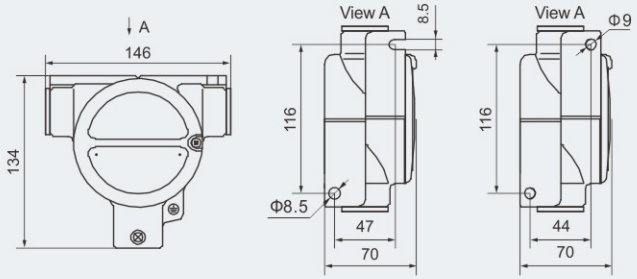

Type F

Application instruction:

1. Type F (Copper-free Aluminium Alloy) is used as mounting accessory for light fittings HRD61-150, BDD81, HRD95 etc.
2. Type F (cast iron) is used as mounting accessory for light fittings HRD61-250, HRD61-400, etc.

Junction Boxes
BHD91 Series Explosion-proof Junction Boxes



- Explosion protection to
  - -CENELEC
  - -IEC
  - -NEC
- Can be used in
  - Zone 1 and Zone 2
  - Zone 21 and Zone 22
  - Class I, Zone 1 and Zone 2
  - Class I, Division 1, Groups A , B, C, D
- Four types: A, B, C, D
- Copper-free Aluminium Alloy enclosure, powder coated surface.

Catalogue number logic

BHD91 - □ / □

- Thread (M, NPT)
- Outline code (A, B, C, D)
- Explosion-proof junction boxes

Selection table

Type /Ordering code	Schematic diagram	Top	Bottom	Left	Right	Weight (kg)
BHD91-A/M20×1.5 BHD91-A/M25×1.5 BHD91-A/M32×1.5	Type A 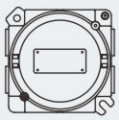	-	-	2-M□×1.5	2-M□×1.5	1.20
BHD91-B/M20×1.5 BHD91-B/M25×1.5 BHD91-B/M32×1.5	Type B 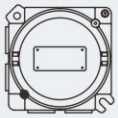	-	2-M□×1.5	2-M□×1.5	-	1.20
BHD91-C/M20×1.5 BHD91-C/M25×1.5 BHD91-C/M32×1.5	Type C 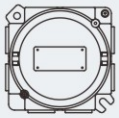	-	2-M□×1.5	2-M□×1.5	2-M□×1.5	1.20
BHD91-D/M20×1.5 BHD91-D/M25×1.5 BHD91-D/M32×1.5	Type D 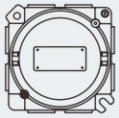	2-M□×1.5	2-M□×1.5	2-M□×1.5	2-M□×1.5	1.20

Zones 1&2; 21&22

Technical data

Explosion-proof junction boxes BHD91-□/□

Explosion protection				
Global (IECEx)	IECEx CQM 15.0061X			
Gas and dust	Ex db IIC T6 Gb			
	Ex tb IIIC T80℃ Db IP66			
Europe (ATEX)	CNEX 16 ATEX 0006			
Gas and dust	Ⓔx II 2 G Ex db IIC T6 Gb			
	Ⓔx II 2 D Ex tb IIIC T80℃ Db			
Certificates	IECEx; ATEX; CU-TR; UL			
Conformity to standards	EN 60079-0, EN 60079-1, EN 60079-31			
	IEC 60079-0, IEC 60079-1, IEC 60079-31			
	UL 1203, UL 508, UL 50, UL 50E, UL 508A			
	CSA C22.2 No.30, CSA C22.2 No.25, CSA C22.2 No.14			
	CSA C22.2 No.94.1, CSA C22.2 No.94.2			
Enclosure material	Copper-free Aluminium Alloy, powder coated surface			
Enclosure colour	Window grey (RAL7040)			
Exposed fastener	Stainless steel			
Rated voltage	Max. 500V AC			
Rated current and Terminal data	Cross section	2.5mm²	4mm²	6mm²
	Rated current	24A	32A	41A
	Terminal number	12	10	8
Degree of protection	IP66			
Ambient temperature	-60℃~+60℃			
Internal&external earthing	M5/M5			
Cable entries	Standard M□ x 1.5 plug			
	NPT□ plug on request			
Cable gland(optional)	DQM-II (Ex d) or DQM-III (Ex d) is recommended. Please see P7/22~31.			

Dimension drawings (all dimensions in mm) - subject to alteration

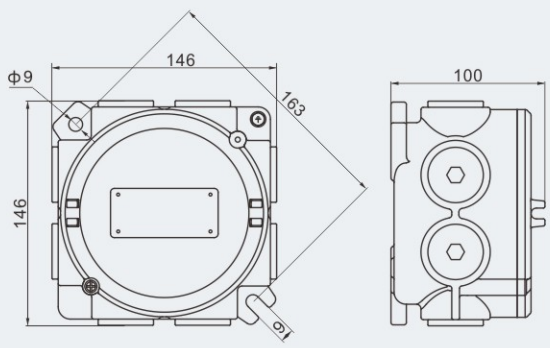

Terminal Boxes
BXJ Series Explosion-proof Terminal Boxes



Ex d IIB

- Explosion protection to
  - -CENELEC
  - -IEC
  - -NEC
- Can be used in
  - Zone 1 and Zone 2
  - Zone 21 and Zone 22
  - Class I, Zone 1 and Zone 2
  - Class I, Division 1, Groups A, B, C, D
  - Class I, Division 2, Groups A , B, C, D
- Three explosion-proof types (Ex e IIC, Ex d IIB and Ex d IIC).
- Enclosure: Copper-free Aluminium Alloy, powder coated surface.
- Size and direction of cable entries can be customized on request.

Catalogue number logic

BXJ - □- □ □

- Internal terminal type (a.....f)
- Enclosure type (I, II, III.....)
- Explosion-proof type (e, IIB, IIC)
- Explosion-proof terminal boxes



Ex d IIC

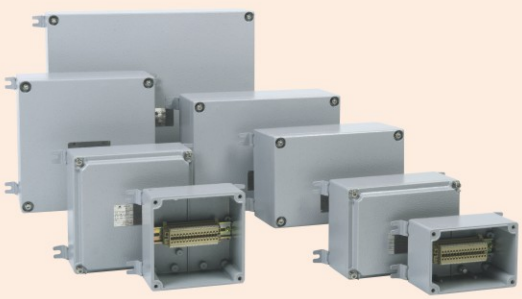

Ex e IIC

Zones 1&2; 21&22

Technical data

Explosion-proof terminal boxes(Ex db IIB+H_2) BXJ-IIB-□□

Explosion protection	
Global (IECEx)	IECEx CQM 14. 0061X
Gas and dust	Ex db IIB+H_2 T6 or T5 Gb Ex tb IIIC T80℃ or T95℃ Db IP66
Europe (ATEX)	TÜV CY 17 ATEX 0205970X
Gas and dust	Ⓔx II 2 G Ex db IIB+H_2 T6 or T5 Gb Ⓔx II 2 D Ex tb IIIC T80℃ or T95℃ Db IP66
Certificates	IECEx; ATEX; CU-TR
Conformity to standards	EN 60079-0, EN 60079-1, EN 60079-31 IEC 60079-0, IEC 60079-1, IEC 60079-31
Enclosure material	Copper-free Aluminium Alloy, powder coated surface
Enclosure colour	Window grey (RAL7040)
Terminal	International brand of terminal blocks
Exposed fastener	Stainless steel
Ambient temperature	T5/T95℃ for Tamb: -60℃≤Ta≤+55℃ T6/T80℃ for Tamb: -60℃≤Ta≤+40℃
Rated voltage	Max. 800V AC
Rated current	Cross section: 2.5mm² / 4mm² / 6mm² / 10mm² / 16mm² / 35mm² / 70mm² / 240mm² Rated current: 24A / 32A / 41A / 57A / 76A / 125A / 192A / 400A
Internal&external earthing	I, II, IIb: M6/M6; III, IIIb, IV, IVb, V, Vb, VI, VIb: M6/M8; VII, VIIb: M8/M8
Degree of protection	IP66
Note	Rated current > 400A on request

Cable entry table

Table of max. number of possible enclosure entries with cable glands DQM-II



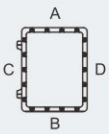

Size	I A/B	I C/D	II A/B	II C/D	II b A/B	II b C/D	III A/B	III C/D	III b A/B	III b C/D	IV A/B	IV C/D	IV b A/B	IV b C/D
M20 x 1.5	5	8	5	10	5	12	10	12	16	20	12	16	22	30
M25 x 1.5	5	7	5	9	5	10	9	11	12	15	11	14	15	20
M32 x 1.5	2	3	2	4	2	6	7	9	9	12	9	12	12	16
M40 x 1.5	2	2	2	3	2	4	3	4	5	6	4	5	6	9
M50 x 1.5	1	2	1	3	1	3	3	3	4	5	3	4	5	7
M63 x 1.5	1	2	1	2	1	3	2	3	2	3	3	3	3	5



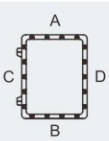

Size	V A/B	V C/D	V b A/B	V b C/D	VI A/B	VI C/D	VI b A/B	VI b C/D	VII A/B	VII C/D	VII b A/B	VII b C/D
M20 x 1.5	14	21	24	40	19	33	30	50	28	41	45	65
M25 x 1.5	12	19	18	27	16	28	20	36	25	35	30	44
M32 x 1.5	10	15	14	21	13	22	18	30	21	29	25	36
M40 x 1.5	4	7	8	12	7	13	11	18	11	16	15	21
M50 x 1.5	4	5	5	9	6	11	6	10	10	13	12	12
M63 x 1.5	3	5	4	7	3	5	5	9	4	6	7	10

Note: For cable entries:
1) Please specify the direction and size of each cable entry.
2) Cable gland is optional, DQM-II (Ex d) or DQM-III (Ex d) is recommended. Please see P7/22~31.

Selection table of BXJ-IIB series explosion-proof terminal boxes

Max. cross section of cable connected to terminals is 35mm^2

See table for max. number of fitted terminals

Cross section of cable (mm^2)		2.5 (a)	4 (b)	6 (c)	10 (d)	16 (e)	35 (f)	Max. dissipated power (W)	Weight (kg)
Enclosure code/Ordering code	Outline								
I	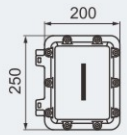	16	15	12	10	8	——	9.8	7.50
II	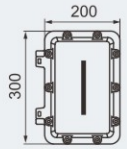	22	18	14	12	10	——	14.4	9.00
II b	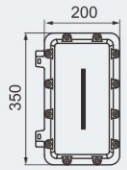	28	25	20	15	12	——	14.4	10.00
III, IIIb	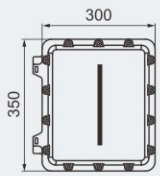	32	30	24	20	16	8	22.2	16.00 (III) 19.80 (III b)
	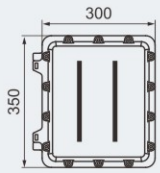	2×25	2×23	2×20	——	——	——	22.2	16.50 (III) 20.50 (III b)
IV, IVb	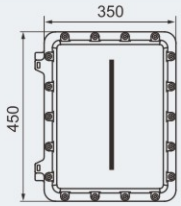	45	40	34	28	24	16	25.2	25.50 (IV) 30.00 (IV b)
	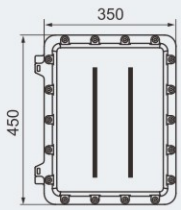	2×40	2×35	2×30	2×20	——	——	25.2	26.30 (IV) 31.00 (IV b)

Selection table of BXJ-IIB series explosion-proof terminal boxes

Max. cross section of cable connected to terminals is 240mm^2

See table for max. number of fitted terminals

Enclosure code/ Ordering code	Outline	Cross section of cable (mm^2) 2.5 (a)	4 (b)	6 (c)	10 (d)	16 (e)	35 (f)	70 (g)	240 (h)	Max. dissipated power (W)	Weight (kg)
V, Vb	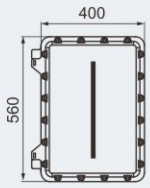	60	56	48	36	30	20	——	——	55.3	38.00 (V) 43.00 (Vb)
	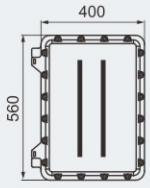	2×55	2×50	2×45	2×35	2×33	——	——	——	55.3	39.00 (V) 44.00 (Vb)
VI, VIb	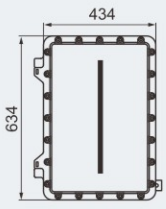	80	70	60	50	35	20	10	6	64.5	50.00 (VI) 56.50 (VIb)
	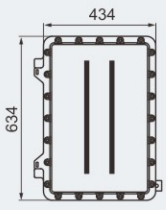	2×80	2×70	2×60	2×50	2×35	——	——	——	64.5	51.50 (VI) 58.00 (VIb)
VII, VIIb	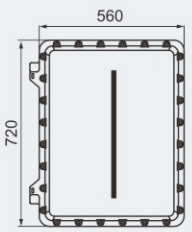	90	80	70	60	40	25	15	9	93.1	80.00 (VII) 88.50 (VIIb)
	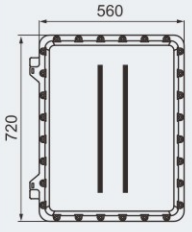	2×90	2×80	2×70	2×60	2×40	——	——	——	93.1	82.00 (VII) 91.50 (VIIb)

Technical data

Explosion-proof terminal boxes (Ex d IIC) BXJ- IIC-□□

Explosion protection							
Global (IECEx)	IECEx CQM 11.0027						
Gas and dust	Ex d IIC T6 Gb						
	Ex tb IIIC T80℃ Db IP65						
Europe (ATEX)	Nemko 09 ATEX 1012						
Gas and dust	Ⓔx II 2 G Ex d IIC T6 Gb						
	Ⓔx II 2 D Ex tb IIIC T80℃ Db IP65						
Certificates	IECEx; ATEX; CU-TR						
Conformity to standards	EN 60079-0, EN 60079-1, EN 60079-31						
	IEC 60079-0, IEC 60079-1, IEC 60079-31						
Enclosure material	Copper-free Aluminium Alloy , powder coated surface						
Enclosure colour	Window grey (RAL7040)						
Terminal	International brand of terminal blocks						
Exposed fastener	Stainless steel						
Rated voltage	Max. 690V AC						
Rated current	Cross section	2.5mm²	4mm²	6mm²	10mm²	16mm²	35mm²
	Rated current	24A	32A	41A	57A	76A	100A
Internal&external earthing	M5/M8						
Degree of protection	IP65						
Ambient temperature	-20℃~+55℃						
Note	Rated current > 250A on request						

Cable entry table

Table of max. number of possible enclosure entries with cable glands DQM-II



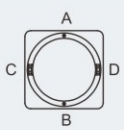

Size	I		II		III		IV		V		VI	
	A/B	C/D	A/B	C/D	A/B	C/D	A/B	C/D	A/B	C/D	A/B	C/D
M20 × 1.5	3	3	4	4	10	10	11	11	15	15	17	17
M25 × 1.5	3	3	4	4	9	9	10	10	13	13	15	15
M32 × 1.5	2	2	3	3	7	7	8	8	11	11	12	12
M40 × 1.5	2	2	3	3	3	3	4	4	5	5	5	5
M50 × 1.5	/	/	/	/	3	3	3	3	4	4	5	5
M63 × 1.5	/	/	/	/	2	2	2	2	3	3	4	4

Note: For cable entries:
1) Please specify the direction and size of each cable entry.
2) Cable gland is optional, DQM-II (Ex d) or DQM-III (Ex d) is recommended. Please see P7/22~31.

Selection table of BXJ-IIC series explosion-proof terminal boxes

Max. cross section of cable connected to terminals is 95mm^2

See table for max. number of fitted terminals

Cross section of cable (mm^2) / Enclosure code/Ordering code	Outline	2.5 (a)	4 (b)	6 (c)	10 (d)	16 (e)	35 (f)	Weight (kg)
I	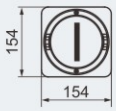	10	8	6	—	—	—	3.50
II	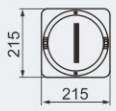	20	18	15	12	10	—	6.50
III	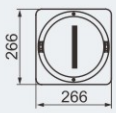	25	24	20	15	12	6	12.00
IV	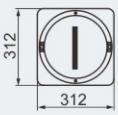	32	30	25	18	14	10	15.00
	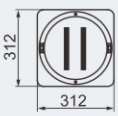	44	40	32	22	—	—	15.50
V	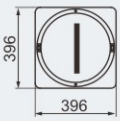	48	44	38	30	20	12	21.00
	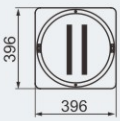	72	60	50	40	—	—	21.50
VI	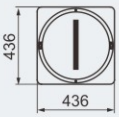	60	54	44	34	26	15	24.00
	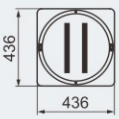	90	80	60	50	40	—	24.50

Technical data

Terminal boxes (Ex e IIC Ex ib IIC) BXJ-e-□□

Explosion protection							
Global (IECEx)	IECEx CQM 13.0032X						
Gas and dust	Ex e IIC T6 or T5 Gb						
	Ex ib IIC T6 Gb						
	Ex tb IIIC T80℃ Db IP66						
Europe (ATEX)	LCIE 13 ATEX 3027X						
Gas and dust	Ⓔx II 2 G Ex e IIC T6 or T5 Gb						
	Ⓔx II 2 G Ex ib IIC T6 Gb						
	Ⓔx II 2 D Ex tb IIIC T80℃ Db IP66						
Certificates	IECEx; ATEX; CU-TR						
Conformity to standards	EN 60079-0, EN 60079-7, EN 60079-11, EN 60079-31						
	IEC 60079-0, IEC 60079-7, IEC 60079-11, IEC 60079-31						
Enclosure material	Copper-free Aluminium Alloy, powder coated surface						
Enclosure colour	Window grey (RAL7040)						
Terminal	International brand of explosion-proof terminal blocks						
Exposed fastener	Stainless steel						
Rated voltage	Max. 690V AC						
Rated current	Cross section	2.5mm²	4mm²	6mm²	10mm²	16mm²	35mm²
	Ex e Rated current	24A	32A	41A	57A	76A	100A
	Ex ib Rated current	5A	5A	5A	-	-	-
Internal&external earthing	M6/M6						
Degree of protection	IP66						
Ambient temperature	Ex e: T6 for Tamb: -50℃ ~ +40℃; T5 for Tamb: -50℃ ~ +55℃						
	Ex ib: T6 for Tamb: -50℃ ~ +55℃						
Note	Ex e Rated current > 125A on request.						

Cable entry table

Table of max. number of possible enclosure entries with cable glands DQM-I



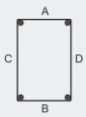

Size	I		II		III		IV		V		VI		VII		VIII	
	A/B	C/D	A/B	C/D	A/B	C/D	A/B	C/D	A/B	C/D	A/B	C/D	A/B	C/D	A/B	C/D
M20 x 1.5	2	3	4	4	4	6	6	6	6	10	10	10	8	12	12	18
M25 x 1.5	2	3	3	3	3	4	4	4	5	9	9	9	7	10	10	16
M32 x 1.5	1	2	2	2	2	3	3	3	3	4	4	4	4	6	6	10
M40 x 1.5	1	2	2	2	2	3	3	3	2	3	3	3	2	3	3	5
M50 x 1.5	/	/	/	/	/	/	/	/	/	3	3	3	2	3	3	5
M63 x 1.5	/	/	/	/	/	/	/	/	/	2	2	2	2	3	3	4

Note: 1. Ex e: Standard inlet hole is thread hole. If through hole is needed, please indicate when ordering.
2. For cable entries:
1) Please specify the direction and size of each cable entry.
2) Cable gland is optional, DQM-I (Ex e) is recommended. Please see P7/19~21.

Selection table of BXJ-e series terminal boxes

Max. cross section of cable connected to terminals is 35mm²
See table for max. number of fitted terminals

Cross section of cable (mm²)		2.5 (a)	4 (b)	6 (c)	10 (d)	16 (e)	35 (f)	Max. dissipated power (W)	Weight (kg)
Enclosure code/Ordering code	Outline								
I		16	15	12	10	—	—	7.83	2.40
II		16	15	12	10	8	—	11.81	2.80
III		25	22	20	15	12	—	8.60	3.80
IV		25	22	20	15	12	8	10.63	5.10
V	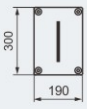	35	30	25	20	15	—	11.34	5.80
VI	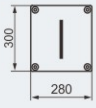	35	30	25	20	15	10	24.68	7.10
	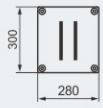	60	50	40	—	—	—		7.50
VII	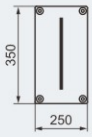	40	35	30	24	18	12	20.44	7.00
	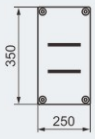	40	40	30	—	—	—		7.00
VIII	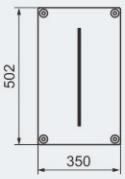	60	55	40	30	20	15	23.75	9.50
	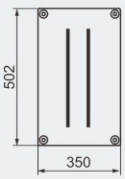	100	90	66	60	40	—		9.70

Dimension drawings (all dimensions in mm) - subject to alteration

BXJ- IIB-□□

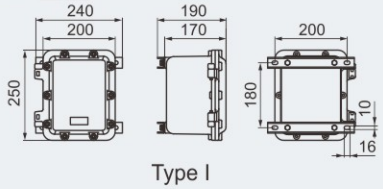

Type I

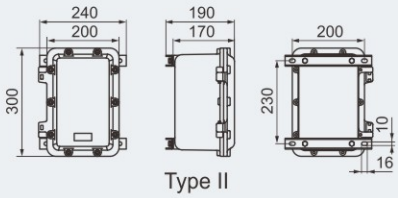

Type II

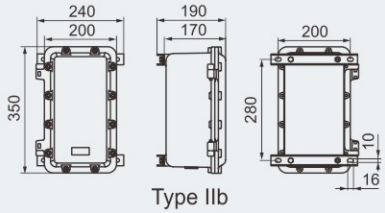

Type IIb

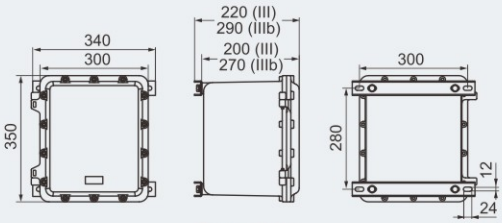

Type III,IIIb

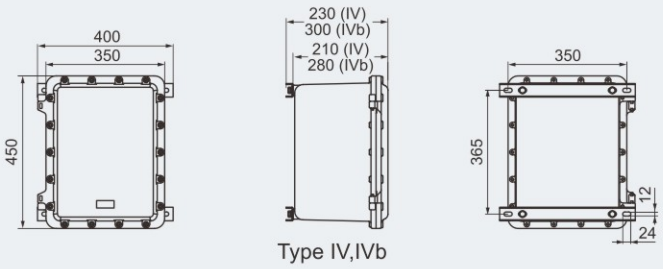

Type IV,IVb

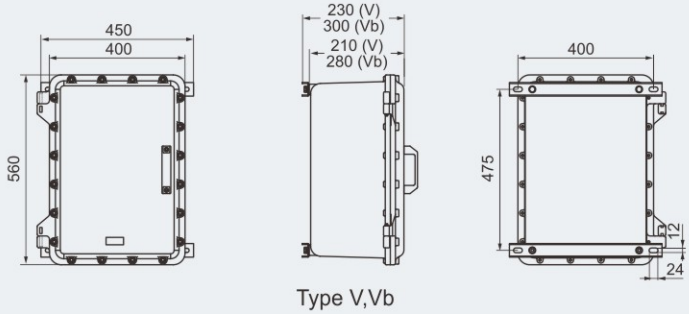

Type V,Vb

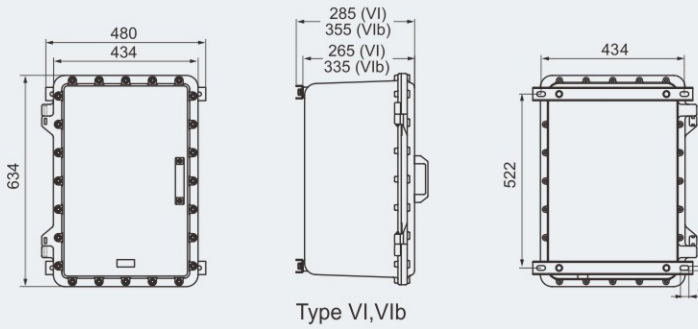

Type VI,VIb

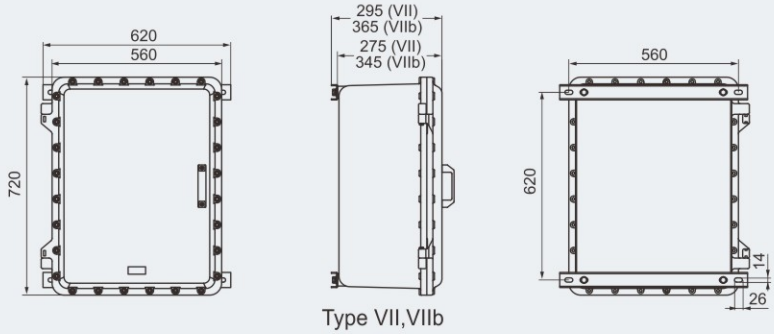

Type VII,VIIb

Dimension drawings (all dimensions in mm) - subject to alteration

BXJ- IIC-□□

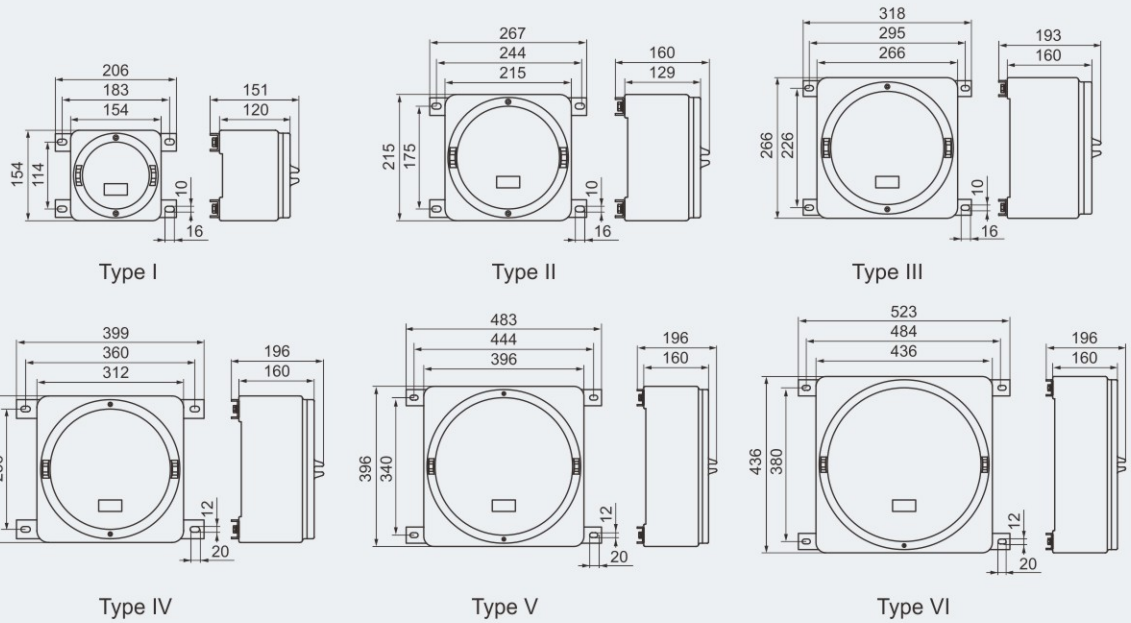

Dimension drawings (all dimensions in mm) - subject to alteration

BXJ- e-□□

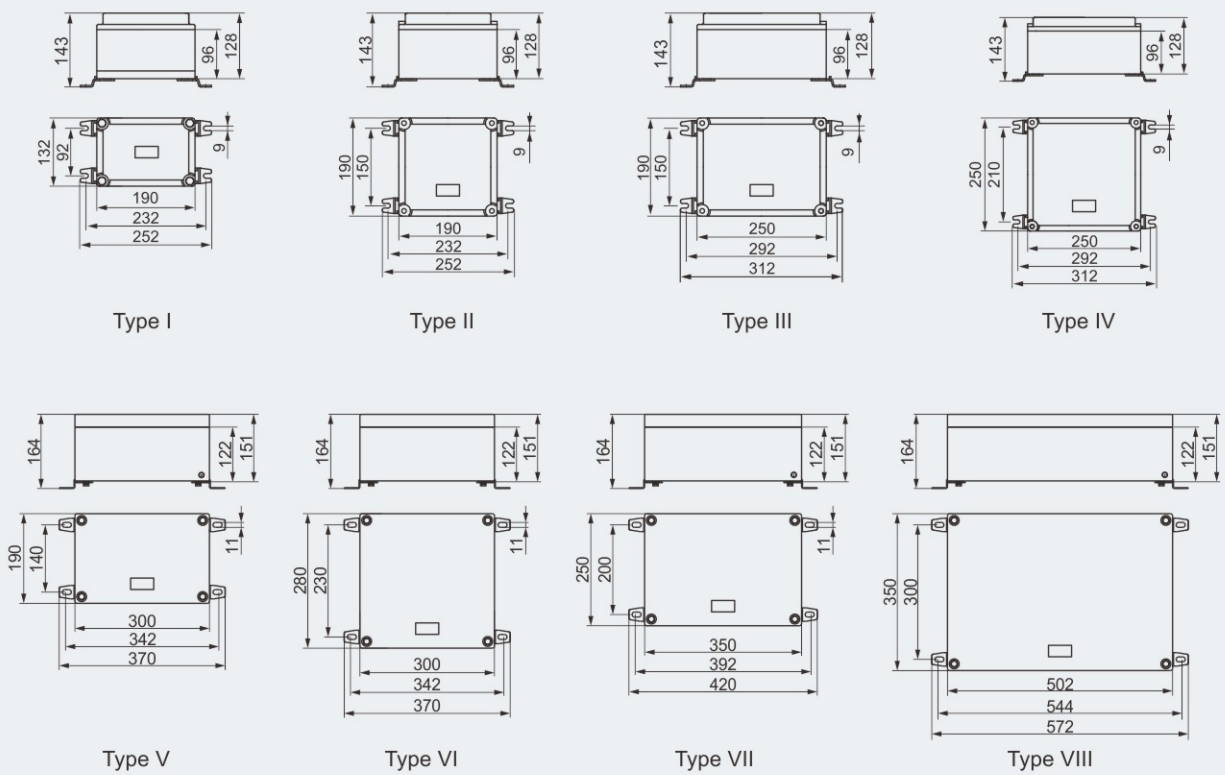

Terminal Boxes
BXJ8050 Series Terminal Boxes



- Explosion protection to
  - -CENELEC
  - -IEC
  - -NEC
- Can be used in
  - Zone 0, Zone 1 and Zone 2
  - Zone 21 and Zone 22
  - Class I, Zone 1 and Zone 2
  - Class I, Division 2, Groups A , B, C, D
- GRP (glass fibre-reinforced polyester resin) enclosure.
- Size and direction of cable entries can be customized on request.

Catalogue number logic

BXJ8050 - □ □

- Internal terminal type (a, b, c, e, f)
- Enclosure type (I, II, III, IV, V, VB, VI, VIB, VII, VIIB)
- Terminal boxes (GRP)

Zones 0&1&2; 21&22

Technical data

Terminal boxes (Ex e IIC Ex ia IIC) BXJ8050-□□

Explosion protection							
Global (IECEx)	IECEx CQM 13.0031X						
Gas and dust	Ex e IIC T6 or T5 Gb Ex ia IIC T6 Ga Ex tb IIIC T80℃ Db IP66						
Europe (ATEX)	LCIE 13 ATEX 3036X						
Gas and dust	Ⓔx II 2 G Ex e IIC T6 or T5 Gb Ⓔx II 1 G Ex ia IIC T6 Ga Ⓔx II 2 D Ex tb IIIC T80℃ Db IP66						
Certificates	IECEx; ATEX; CU-TR						
Conformity to standards	EN 60079-0, EN 60079-7, EN 60079-11, EN 60079-31 IEC 60079-0, IEC 60079-7, IEC 60079-11, IEC 60079-31						
Enclosure material	GRP (glass fibre-reinforced polyester resin)						
Terminal	International brand of explosion-proof terminal blocks						
Exposed fastener	Stainless steel						
Rated voltage	Max. 690V AC						
Rated current	Cross section	2.5mm²	4mm²	6mm²	10mm²	16mm²	35mm²
	Ex e Rated current	20A	28A	35A	45A	60A	100A
	Ex ia Rated current	5A	5A	5A	-	-	-
Degree of protection	IP66						
Ambient temperature	Ex e: T6 for Tamb: -40℃ ~ +40℃; T5 for Tamb: -40℃ ~ +55℃ Ex ia: T6 for Tamb: -40℃ ~ +55℃						
Note	Ex e Rated current > 125A on request.						

Cable entry table

Table of max. number of possible enclosure entries with cable glands DQM-I

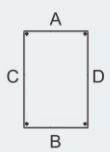



		Size								
		M20 × 1.5	M25 × 1.5	M32 × 1.5	M40 × 1.5	M50 × 1.5	M63 x 1.5	M75 x 1.5	M90 x 1.5	M115 x 1.5
I	A/B	2	2	1	/	/	/	/	/	/
	C/D	2	2	1	/	/	/	/	/	/
II	A/B	2	2	1	/	/	/	/	/	/
	C/D	5	3	3	2	/	/	/	/	/
III	A/B	3	3	2	2	1	/	/	/	/
	C/D	6	6	2	2	2	/	/	/	/
IV	A/B	8	6	5	3	2	1	/	/	/
	C/D	12	10	8	4	3	2	/	/	/
IVB	A/B	8	6	5	4	3	1	/	/	/
	C/D	12	10	8	5	4	3	/	/	/
V	A/B	14	12	10	5	4	3	/	/	/
	C/D	12	10	8	4	3	2	/	/	/
VB	A/B	14	12	10	5	4	3	/	/	/
	C/D	12	10	8	5	4	3	/	/	/
VI	A/B	8	5	5	3	2	1	/	/	/
	C/D	6	5	3	2	2	1	/	/	/
VII / VIIB	A/B	14	12	10	5	4	3	/	/	/
	C/D	25	21	17	10	6	6	/	/	/

Note: For cable entries:
1) Please specify the direction and size of each cable entry.
2) Cable gland is optional, DQM-I (Ex e) is recommended. Please see P7/19~21.

Selection table of BXJ8050 series terminal boxes

Max. cross section of cable connected to terminals is 35mm^2

See table for max. number of fitted terminals

Cross section of cable (mm^2)		2.5 (a)	4 (b)	6 (c)	10 (d)	16 (e)	35 (f)	Max. dissipated power (W)	Weight (kg)
Enclosure code/Ordering code	Outline								
I		12	10	8	—	—	—	2.30	0.80
II		25	22	18	—	—	—	6.81	1.30
III	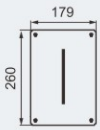	30	28	22	18	15	—	6.50	2.10
IV	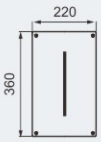	44	40	32	25	20	—	14.32	3.25
IVB									4.00
V	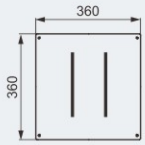	88	80	60	50	40	14	28.08	4.15
VB									5.20
VI	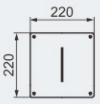	25	22	18	14	—	—	7.92	2.00
VII	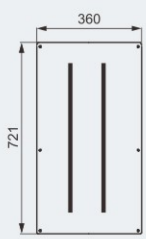	180	160	130	100	80	30	25.00	14.55
VIIB									16.75

Dimension drawings (all dimensions in mm) - subject to alteration

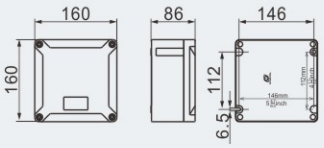

Type I

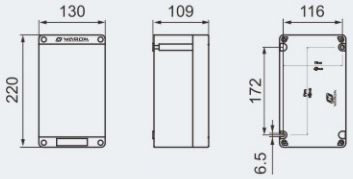

Type II

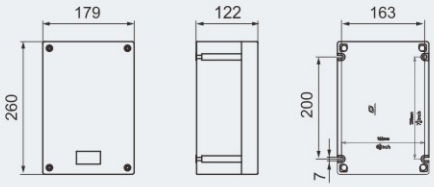

Type III

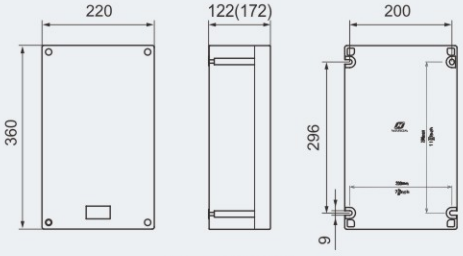

Type IV(IVB)

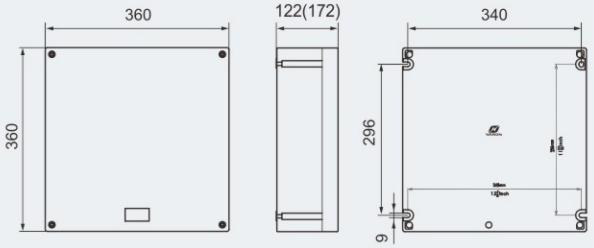

Type V(VB)

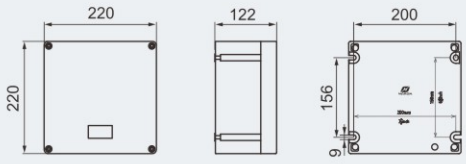

Type VI

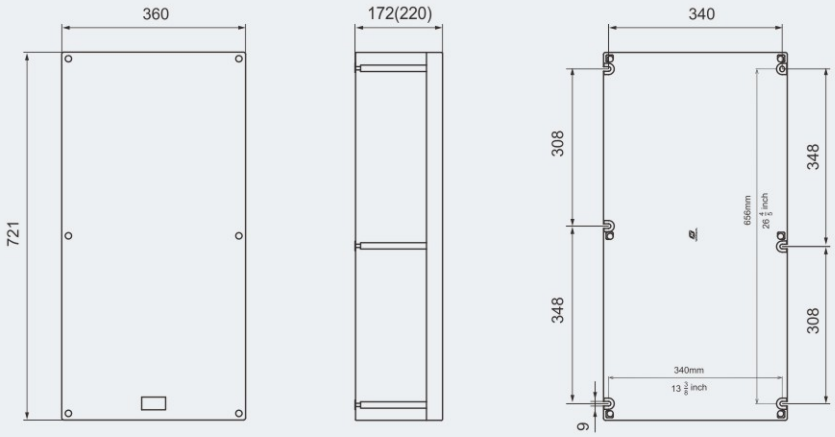

Type VII(VIIB)

Terminal Boxes
BXJ8050 Series Terminal Boxes



- Explosion protection to
  - -CENELEC
  - -IEC
  - -NEC
- Can be used in
  - Zone 1 and Zone 2
  - Zone 21 and Zone 22
  - Class I, Zone 1 and Zone 2
  - Class I, Division 2, Groups A, B, C, D
- GRP (glass fibre-reinforced polyester resin) enclosure.
- Size and direction of cable entries can be customized on request.

Catalogue number logic

BXJ8050 - □ / □ □

- Number of terminals
- Rated current: 50
- Case model: I, IV
- Explosion-proof terminal box (GRP material)

Technical data

Explosion-proof terminal boxes BXJ8050-□/□□

Explosion protection	
Global (IECEx)	IECEx CQM 23.0001X
Gas and dust	Ex eb IIC T6/T5 Gb (Without fuse module) Ex eb mb IIC T6/T5 Gb (With fuse module) Ex tb IIIC T80℃ Db
Certificates	IECEx
Conformity to standards	IEC 60079-0, IEC 60079-7, IEC 60079-18, IEC 60079-31
Enclosure material	GRP (glass fibre-reinforced polyester resin)
Terminal	Stud terminals
Cross section of cable	1~10mm^2
Exposed fastener	Stainless steel
Rated voltage	Max. 1000V without fuse module, Max. 500V with fuse module
Rated current	Max. 50A. for terminals, Max. 10A for fuse module
Degree of protection	IP66
Ambient temperature	T6: -60℃~+40℃ T5: -60℃~+60℃ (Without fuse) -60℃~+50℃ (With fuse)
Cable entries	Standard, see Cable entry table

Zones 1&2; 21&22

Cable entry table

Table of max. number of possible enclosure entries with cable glands DQM-I

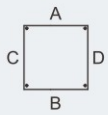



		Size					
		M20 × 1.5	M25 × 1.5	M32 × 1.5	M40 × 1.5	M50 × 1.5	M63 x 1.5
I	A/B	2	2	1	/	/	/
	C/D	2	2	1	/	/	/
VI	A/B	8	5	5	3	2	2
	C/D	6	5	3	2	2	1

Note: For cable entries:
1) Please specify the direction and size of each cable entry.
2) Cable gland is optional, DQM-I (Ex e) is recommended. Please see P7/17~19.

Terminals

Description	Illustration	Max. Current	Ordering code	Weight (kg)
Stud terminal		50A	30010B	0.1

Dimension drawings (all dimensions in mm) - subject to alteration

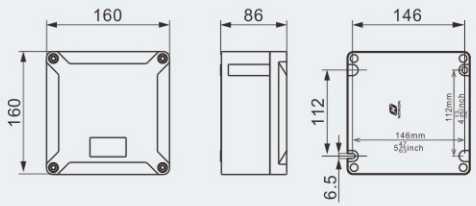

Type I

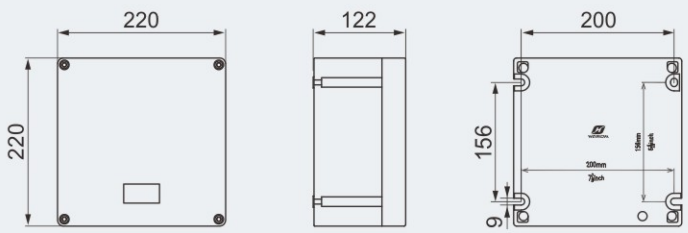

Type IV

Terminal Boxes
BXJ8050-20/6 Series Junction Boxes

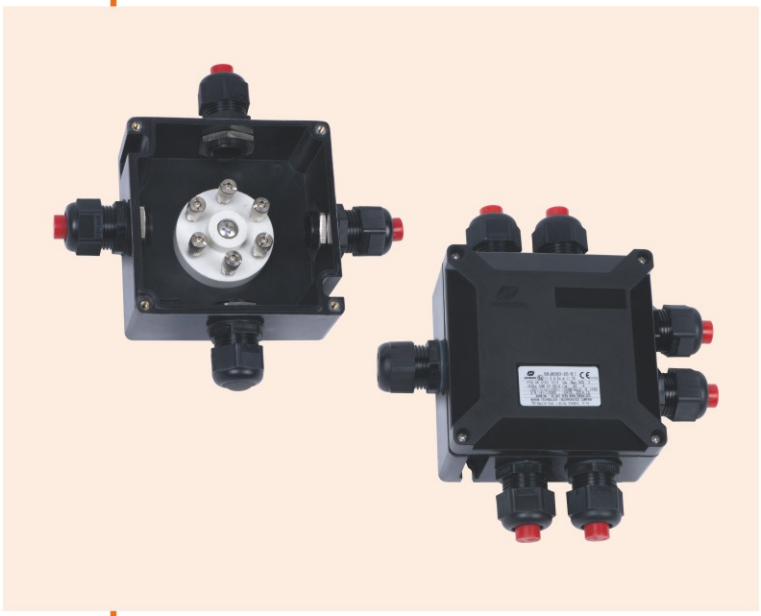

- Explosion protection to
  - -CENELEC
  - -IEC
  - -NEC
- Can be used in
  - Zone 1 and Zone 2
  - Class I, Zone 1 and Zone 2
  - Class I, Division 2, Groups A, B, C, D
- GRP (glass fibre-reinforced polyester resin) enclosure.

Catalogue number logic

BXJ8050 - 20 / 6 □

- Enclosure type (A1, A2, B1, B2, C1, C2...)
- Terminal number
- Rated current
- Junction boxes (GRP)

Technical data

Junction boxes	BXJ8050-20/6□
Explosion protection	
Global (IECEx)	IECEx CQM 07.0013
Gas	Ex e II T6
Europe (ATEX)	PTB 15 ATEX 1016X
Gas	Ⓔx II 2 G Ex e IIC T6 Gb
Certificates	IECEx; ATEX; CU-TR
Conformity to standards	EN 60079-0, EN 60079-7
	IEC 60079-0, IEC 60079-7
Enclosure material	GRP (glass fibre-reinforced polyester resin)
Terminal	6 stud terminals
Cross section of cable	0.2~4mm^2
Exposed fastener	Stainless steel
Rated voltage	Max. 500V AC
Rated current	20A
Degree of protection	IP65
Ambient temperature	-20℃~+55℃
Cable entries	Standard, see Selection table

Zones 1&2

Selection table

Type/Ordering code	Schematic diagram	Cable gland	Weight (kg)
BXJ8050-20/6A1	A1 	1 x M20 x 1.5 DQM-I (plastic)	0.65
BXJ8050-20/6A2	A2	1 x M25 x 1.5 DQM-I (plastic)	
BXJ8050-20/6B1	B1 	2 x M20 x 1.5 DQM-I (plastic) 1 stopping rod	0.70
BXJ8050-20/6B2	B2	2 x M25 x 1.5 DQM-I (plastic) 1 stopping rod	
BXJ8050-20/6C1	C1 	3 x M20 x 1.5 DQM-I (plastic) 2 stopping rods	0.70
BXJ8050-20/6C2	C2	3 x M25 x 1.5 DQM-I (plastic) 2 stopping rods	
BXJ8050-20/6D1	D1 	4 x M20 x 1.5 DQM-I (plastic) 3 stopping rods	0.75
BXJ8050-20/6D2	D2	4 x M25 x 1.5 DQM-I (plastic) 3 stopping rods	
BXJ8050-20/6E1	E1 	2 x M20 x 1.5 DQM-I (plastic) 1 stopping rod	0.70
BXJ8050-20/6E2	E2	2 x M25 x 1.5 DQM-I (plastic) 1 stopping rod	
BXJ8050-20/6F1	F1 	4 x M20 x 1.5 DQM-I (plastic) 3 stopping rods	0.75
BXJ8050-20/6F2	F2	4 x M25 x 1.5 DQM-I (plastic) 3 stopping rods	
BXJ8050-20/6G1	G1 	5 x M20 x 1.5 DQM-I (plastic) 4 stopping rods	0.75
BXJ8050-20/6G2	G2	5 x M25 x 1.5 DQM-I (plastic) 4 stopping rods	
BXJ8050-20/6H1	H1 	6 x M20 x 1.5 DQM-I (plastic) 5 stopping rods	0.75
BXJ8050-20/6H2	H2	6 x M25 x 1.5 DQM-I (plastic) 5 stopping rods	
BXJ8050-20/6I1	I1 	7 x M20 x 1.5 DQM-I (plastic) 6 stopping rods	0.80
BXJ8050-20/6I2	I2	7 x M25 x 1.5 DQM-I (plastic) 6 stopping rods	

Terminals

Description	Illustration	Max. Current	Ordering code	Weight (kg)
Stud terminal		20A	30010	0.15

Dimension drawings (all dimensions in mm) - subject to alteration

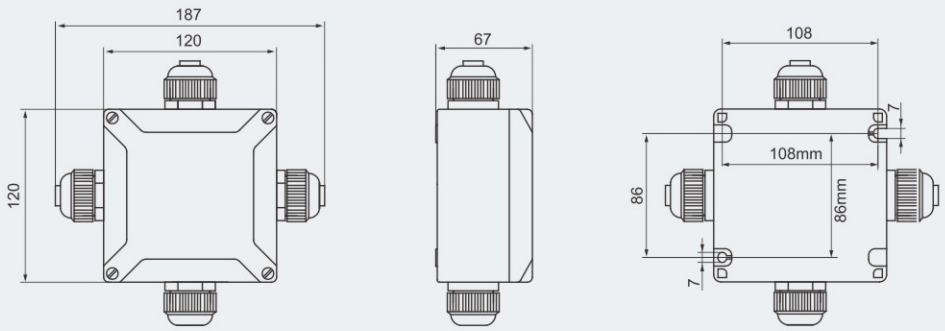

Terminal Boxes
BXJ-S Series Terminal Boxes



- Explosion protection to
  - -CENELEC
  - -IEC
  - -NEC
- Can be used in
  - Zone 0, Zone 1 and Zone 2
  - Zone 21 and Zone 22
  - Class I, Zone 1 and Zone 2
  - Class I, Division 2, Groups A, B, C, D
- Stainless steel enclosure.
- International brand of explosion-proof terminal blocks.

Catalogue number logic

BXJ-S - □ □

- Internal terminal type (a, b, c, d, e, f, g, h, i, j)
- Enclosure type (I, II, III, IIIB, IV, IVB, V, VB, VI, VIB, VII, VIIB, VIII)
- Terminal boxes (Stainless steel)

Technical data

Terminal boxes (Ex eb IIC Ex ia IIC) BXJ-S-□□

Explosion protection	
Global (IECEx)	IECEx CQM 21.0022X
Gas and dust	Ex eb IIC T6...T3 Gb Ex ia IIC T6 Ga Ex tb IIIC T80℃...T130℃ Db
Europe (ATEX)	TPS 21 ATEX 089761 0020X
Gas and dust	Ⓔx II 2 G Ex eb IIC T6...T3 Gb Ⓔx II 1 G Ex ia IIC T6 Ga Ⓔx II 2 D Ex tb IIIC T80℃...T130℃ Db
Certificates	IECEx; ATEX; CU-TR; INMETRO; UL
Conformity to standards	EN 60079-0, EN 60079-7, EN 60079-11, EN 60079-31 IEC 60079-0, IEC 60079-7, IEC 60079-11, IEC 60079-31 UL 1203, UL 508, UL 50, UL 50E, UL 508A CSA C22.2 No.213, CSA C22.2 No.14, CSA C22.2 No. 94.1, CSA C22.2 No. 94.2
Enclosure material	Stainless steel
Terminal	International brand of explosion-proof terminal blocks
Exposed fastener	Stainless steel
Rated voltage	Max. 1000V AC Max. 1500V DC

Zones 0&1&2; 21&22

Terminal boxes (Ex eb IIC Ex ia IIC) BXJ-S-□□

Rated current	Max. 1000A					
	Cross section	2.5mm²	4mm²	6mm²	10mm²	16mm²
	Ex e Rated current	24A	32A	41A	57A	76A
	Ex ia Rated current	5A	5A	-	-	-
	Cross section	35mm²	70mm²	120mm²	185mm²	300mm²
	Ex e Rated current	125A	192A	269A	353A	520A
	Ex ia Rated current	-	-	-	-	-
	Cross section	2 x 185mm²	2 x 300mm²	3 x 300mm²	-	-
	Ex e Rated current	550A	700A	1000A	-	-
	Ex ia Rated current	-	-	-	-	-
Internal&external earthing	M6/M6					
Degree of protection	IP66					
Ambient temperature	Ex eb: -40℃/-60℃ ~ +30℃/+40℃/+45℃/+55℃/+60℃/+70℃ Ex ia: -40℃/-60℃ ~ +70℃					

Cable entry table

Table of max. number of possible enclosure entries with cable glands DQM-I

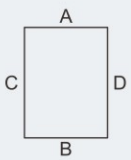





		Size								
		M20 x 1.5	M25 x 1.5	M32 x 1.5	M40 x 1.5	M50 x 1.5	M63 x 1.5	M75 x 1.5	M90 x 1.5	M115 x 1.5
I	A/B	2	2	1	1	1	/	/	/	/
	C/D	2	2	1	1	1	/	/	/	/
II	A/B	8	8	3	3	2	1	/	/	/
	C/D	8	8	3	3	2	1	/	/	/
III	A/B	10	8	5	5	3	2	/	/	/
	C/D	10	8	5	5	3	2	/	/	/
IIIB	A/B	15	12	8	8	6	2	/	/	/
	C/D	10	8	5	5	3	2	/	/	/
IV	A/B	10	10	5	4	3	3	/	/	/
	C/D	14	12	7	5	4	4	/	/	/
IVB	A/B	15	15	8	8	6	3	/	/	/
	C/D	21	18	10	10	8	4	/	/	/
V	A/B	16	16	8	6	5	4	/	/	/
	C/D	16	16	8	6	5	4	/	/	/
VB	A/B	24	24	21	12	10	8	/	/	/
	C/D	24	24	21	12	10	8	/	/	/
VI	A/B	27	24	14	12	10	5	/	/	/
	C/D	30	30	16	14	12	6	/	/	/
VIB	A/B	45	32	28	18	15	10	/	/	/
	C/D	55	40	32	21	18	12	/	/	/
VII	A/B	30	30	16	14	12	6	/	/	/
	C/D	42	39	22	20	16	8	/	/	/
VIIB	A/B	55	40	32	21	18	12	7	6	3
	C/D	70	52	44	30	24	16	11	9	4
VIII	A/B	70	52	44	30	24	16	11	9	4
	C/D	90	64	56	36	33	20	16	14	5

Note: For cable entries:

1) Please specify the direction and size of each cable entry.
2) Cable gland is optional, DQM-I (Ex e) is recommended. Please see P7/19~21.
3) Can be equipped with Gland plate.

Selection table for max. dissipated power

Enclosure type	Ambient temperature	Maximum heat loss power consumption (W)			Enclosure type	Ambient temperature	Maximum heat loss power consumption (W)		
		T6 or T80℃	T5 or T80℃	T4 or T95℃			T6 or T80℃	T5 or T80℃	T4 or T95℃
BXJ-S-I	-60℃ to +40℃	5.87	7.93	-	BXJ-S-VB	-60℃ to +40℃	107.37	167.77	-
	-60℃ to +45℃	5.31	7.45	-		-60℃ to +45℃	60.4	154.61	-
	-60℃ to +55℃	-	5.87	-		-60℃ to +55℃	-	107.37	-
	-60℃ to +60℃	2.91	5.31	-		-60℃ to +60℃	52.61	60.4	-
	-60℃ to +70℃	-	2.91	7.93		-60℃ to +70℃	-	52.61	167.77
BXJ-S-II	-60℃ to +40℃	46.98	72.15	-	BXJ-S-VI	-60℃ to +40℃	111.96	168.4	-
	-60℃ to +45℃	41.19	64.72	-		-60℃ to +45℃	99.65	143.49	-
	-60℃ to +55℃	-	46.98	-		-60℃ to +55℃	-	111.96	-
	-60℃ to +60℃	19.59	41.19	-		-60℃ to +60℃	48.83	99.65	-
	-60℃ to +70℃	-	19.59	72.15		-60℃ to +70℃	-	48.83	168.4
BXJ-S-III	-60℃ to +40℃	26.48	36.79	-	BXJ-S-VIB	-60℃ to +40℃	166.55	288.35	-
	-60℃ to +45℃	22.84	36.34	-		-60℃ to +45℃	157.9	254.79	-
	-60℃ to +55℃	-	26.48	-		-60℃ to +55℃	-	166.55	-
	-60℃ to +60℃	16.35	22.84	-		-60℃ to +60℃	46.14	157.9	-
	-60℃ to +70℃	-	16.35	36.79		-60℃ to +70℃	-	46.14	288.35
BXJ-S-IIIB	-60℃ to +40℃	19.97	39.14	-	BXJ-S-VII	-60℃ to +40℃	288.28	425.07	-
	-60℃ to +45℃	16.78	35.5	-		-60℃ to +45℃	248.57	376.53	-
	-60℃ to +55℃	-	19.97	-		-60℃ to +55℃	-	288.28	-
	-60℃ to +60℃	8.44	16.78	-		-60℃ to +60℃	110.48	248.57	-
	-60℃ to +70℃	-	8.44	39.14		-60℃ to +70℃	-	110.48	425.07
BXJ-S-IV	-60℃ to +40℃	66.16	102.46	-	BXJ-S-VIIB	-60℃ to +40℃	279.63	374.9	-
	-60℃ to +45℃	52.28	81.68	-		-60℃ to +45℃	223.86	341.6	-
	-60℃ to +55℃	-	66.16	-		-60℃ to +55℃	-	279.63	-
	-60℃ to +60℃	29.4	52.28	-		-60℃ to +60℃	121.03	223.86	-
	-60℃ to +70℃	-	29.4	102.46		-60℃ to +70℃	-	121.03	374.9
BXJ-S-IVB	-60℃ to +40℃	115.24	191.22	-	BXJ-S-VIII	-60℃ to +40℃	577.44	816.6	-
	-60℃ to +45℃	111.37	162.22	-		-60℃ to +45℃	546.65	799.9	-
	-60℃ to +55℃	-	115.24	-		-60℃ to +55℃	-	577.44	-
	-60℃ to +60℃	52.97	111.37	-		-60℃ to +60℃	263.62	546.65	-
	-60℃ to +70℃	-	52.97	191.22		-60℃ to +70℃	-	263.62	816.6
BXJ-S-V	-60℃ to +40℃	127.22	195.34	-					
	-60℃ to +45℃	106.06	175.32	-					
	-60℃ to +55℃	-	127.22	-					
	-60℃ to +60℃	47.14	106.06	-					
	-60℃ to +70℃	-	47.14	195.34					

For current exceeds 520A，the copper bar is used. The below table applies.

Enclosure type	Ambient temperature	Maximum heat loss power consumption (W)			Enclosure type	Ambient temperature	Maximum heat loss power consumption (W)		
		T6 or T80℃	T5 or T80℃	T4 or T95℃			T6 or T80℃	T5 or T80℃	T4 or T95℃
BXJ-S-VI	-60℃ to +30℃	SS (550A)	-	-	BXJ-S-VIIB	-60℃ to +30℃	SS (550A)	-	-
	-60℃ to +70℃	-	SS (550A)	-		-60℃ to +70℃	-	SS (550A)	-
BXJ-S-VIB	-60℃ to +30℃	SS (550A)	-	-		-60℃ to +70℃	-	MS (700A)	-
	-60℃ to +70℃	-	SS (550A)	-	BXJ-S-VIII	-60℃ to +30℃	SS (550A)	-	-
BXJ-S-VII	-60℃ to +30℃	SS (550A)	-	-		-60℃ to +70℃	-	SS (550A)	-
	-60℃ to +70℃	-	SS (550A)	-		-60℃ to +70℃	-	MS (700A)	-
	-60℃ to +70℃	-	MS (700A)	-		-60℃ to +70℃	-	-	LS (1000A)

Selection table of BXJ-S series terminal boxes

Max. cross section of cable connected to terminals is 300mm^2

See table for max. number of fitted terminals

Cross section of cable (mm^2)		2.5 (a)	4 (b)	6 (c)	10 (d)	16 (e)	35 (f)	70 (g)	120 (h)	185 (i)	300 (j)	Weight (kg)
Enclosure code/Ordering code	Outline											
I	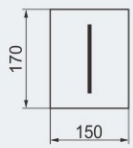	12	12	8	—	—	—	—	—	—	—	1.73
II	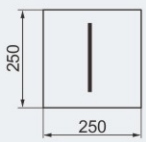	27	23	18	15	12	8	—	—	—	—	3.80
III, IIIB	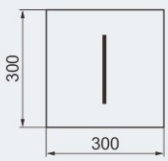	30	28	25	20	14	10	—	—	—	—	5.20 (III) 5.77 (IIIB)
IV, IVB	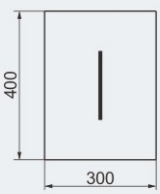	45	40	35	28	23	9	—	—	—	—	6.50 (IV) 7.10 (IVB)

Selection table of BXJ-S series terminal boxes

Max. cross section of cable connected to terminals is 300mm^2

See table for max. number of fitted terminals

Cross section of cable (mm^2) / Enclosure code/Ordering code	Outline	2.5 (a)	4 (b)	6 (c)	10 (d)	16 (e)	35 (f)	70 (g)	120 (h)	185 (i)	300 (j)	Weight (kg)
V, VB	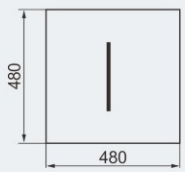	56	50	40	30	20	16	—	—	—	—	12.40 (V) 17.60 (VB)
	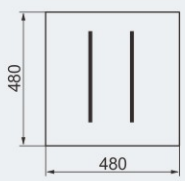	112	100	80	60	40	—	—	—	—	—	12.70 (V) 17.90 (VB)
VI, VIB	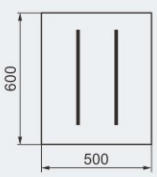	150	140	120	100	80	56	—	—	—	—	17.60 (VI) 26.40 (VIB)
VII, VIIB	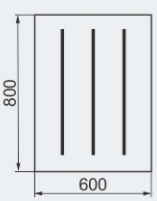	315	300	240	225	180	120	—	—	—	—	29.30 (VII) 34.30 (VIIB)
VIII	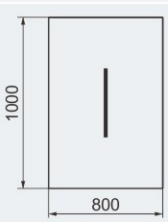	135	125	105	95	80	50	27	24	18	18	52.00 (VIII)
	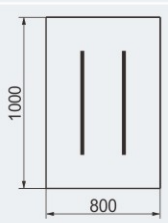	270	250	210	190	160	100	—	—	—	—	
	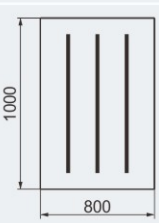	405	375	315	285	240	—	—	—	—	—	

Dimension drawings (all dimensions in mm) - subject to alteration

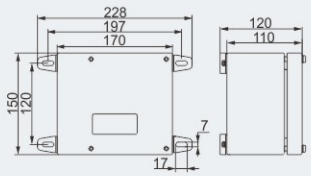

Type I

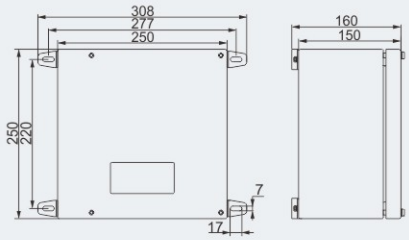

Type II

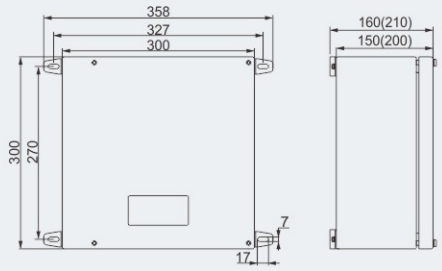

Type III, IIIB

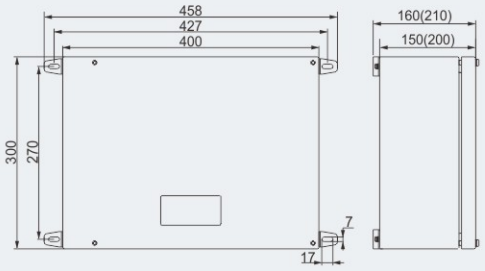

Type IV, IVB

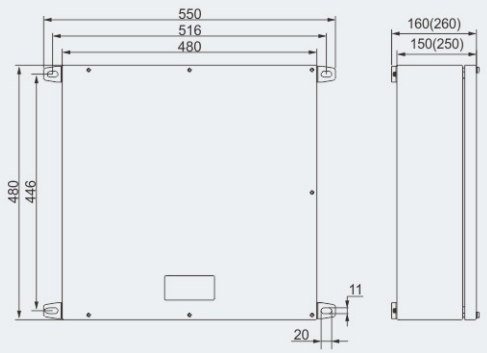

Type V, VB

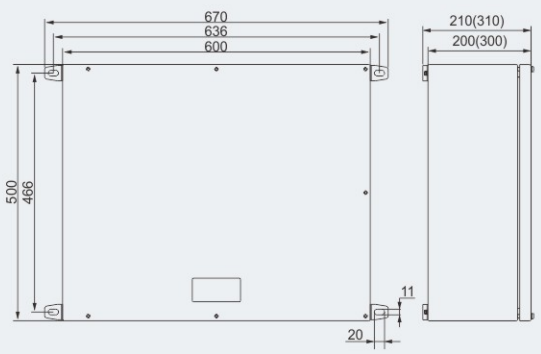

Type VI, VIB

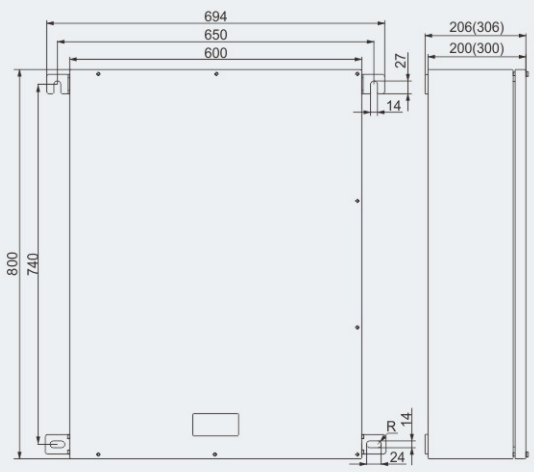

Type VII, VIIB

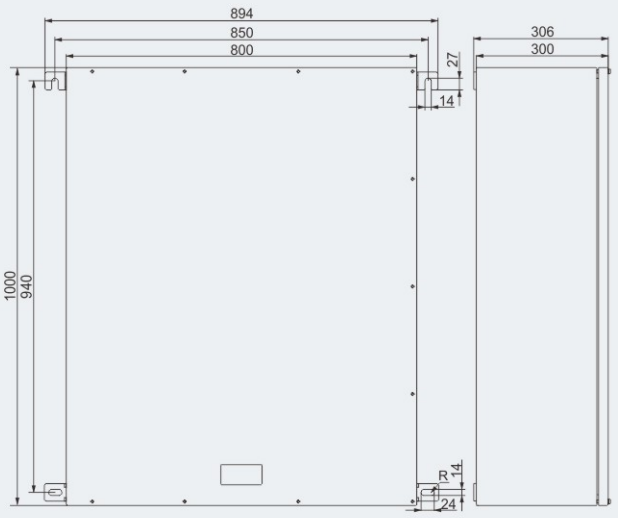

Type VIII

Terminal Boxes
BXJ91 Series Explosion-proof High-Voltage Junction Boxes



- Explosion protection to
  - -CENELEC
  - -IEC
  - -NEC
- Can be used in
  - Zone 1 and Zone 2
  - Zone 21 and Zone 22
  - Class I, Zone 1 and Zone 2
  - Class I, Division 2, Groups A , B, C, D
- Enclosure: stainless steel or carbon steel.
- Special requirements on request.
- Copper bars and high-voltage insulators.

Catalogue number logic

BXJ 91 - □ / □ / □

- Rated current (A)
- Rated voltage (kV)
- Model of enclosure: I, II
- Design number
- Explosion-proof high-voltage junction box

Technical data

Explosion-proof high-voltage junction box BXJ91-□/□/□

Explosion protection	
Global (IECEx)	IECEx CQM 24.0021X
Gas and dust	Ex eb IIC T6...T4 Gb
	Ex ec IIC T6...T4 Gc
	Ex tb IIIC T80℃ Db
Europe (ATEX)	ExVeritas 24 ATEX 1877X
Gas and dust	Ⓔx II 2 G Ex eb IIC T6...T4 Gb
	Ⓔx II 3 G Ex ec IIC T6...T4 Gc
	Ⓔx II 2 D Ex tb IIIC T80℃ Db
Certificates	IECEx; ATEX
Conformity to standards	EN 60079-0, EN 60079-7, EN 60079-31
	IEC 60079-0, IEC 60079-7, IEC 60079-31
Enclosure material	Stainless steel or carbon steel
Exposed fastener	Stainless steel
Rated voltage	Max. 11kV AC(eb)
	Max. 15kV AC(ec)

Zones 1&2; 21&22

Explosion-proof high-voltage junction box BXJ91-□/□/□

Rated current	Max. 800A			
	Conductor (mm^2)	Safe carrying capacity (A)	Temp. Class	
			-60℃≤Ta≤+40℃	-60℃≤Ta≤+60℃
	70	200	T6	T5
	95	250		
	120	320		
	150	350		
	185	400		
	240	500	T5	T4
	300	630		
	400	800		
Internal & external earthing	M8/M8			
Degree of protection	IP66			
Ambient temperature	-60℃≤Ta≤+40℃/+60℃			

Selection table of BXJ91 series explosion-proof high-voltage junction box (all dimensions in mm)

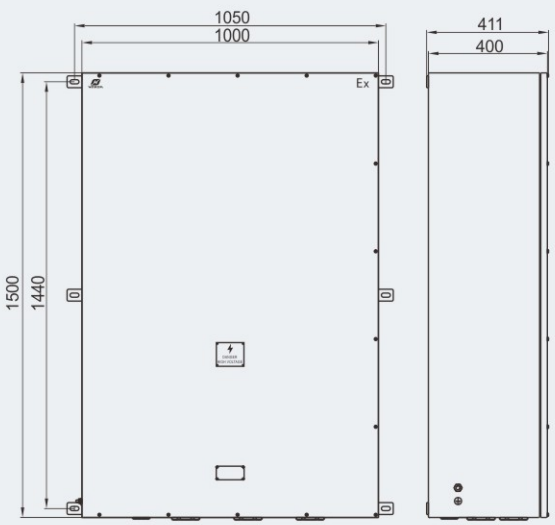

BXJ91-I/□/□

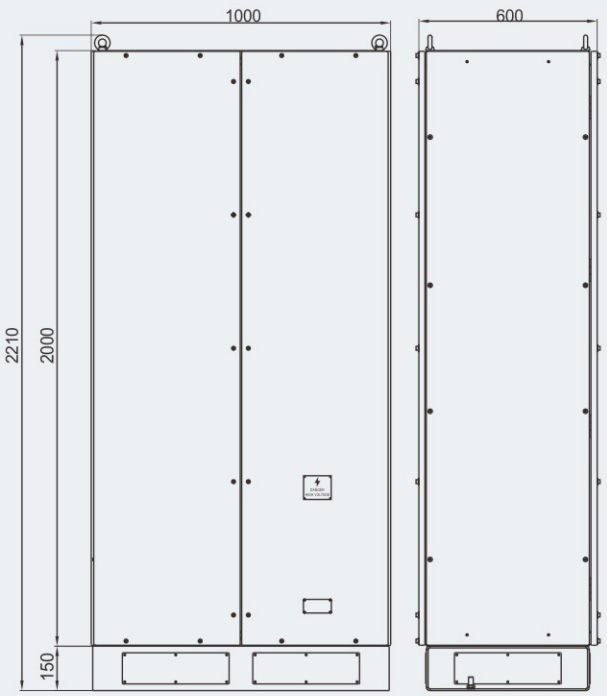

BXJ91-II/□/□

Terminal Boxes
BXJ92 Series Explosion-proof High-Voltage Junction Boxes

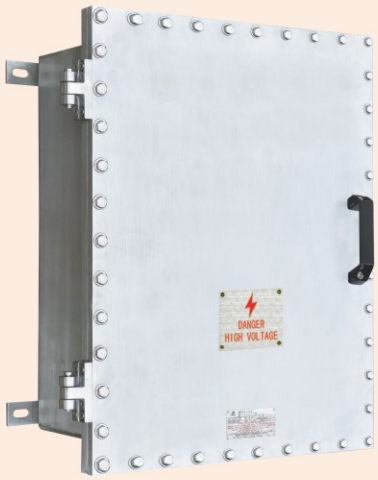

- Explosion protection to
  - -CENELEC
  - -IEC
  - -NEC
- Can be used in
  - Zone 1 and Zone 2
  - Zone 21 and Zone 22
  - Class I, Zone 1 and Zone 2
  - Class I, Division 2, Groups A , B, C, D
- Enclosure: stainless steel or carbon steel.
- Special requirements on request.
- Copper bars and high-voltage insulators.

Catalogue number logic

BXJ 92 - □ □ / □ / □

- Rated current (A)
- Rated voltage (kV)
- Installation: A: Pedestal type; B: Surface type
- Model of enclosure: I, II
- Design number
- Explosion-proof high-voltage junction box

Technical data

Explosion-proof high-voltage junction box BXJ92-□/□/□

Explosion protection	
Global (IECEx)	IECEx PCET 24.0011X
Gas and dust	Ex db IIB T6...T5 Gb Ex tb IIIC T80℃...T95℃ Db
Europe (ATEX)	ExVeritas 24 ATEX 1911X
Gas and dust	Ⓔx II 2 G Ex db IIB T6...T5 Gb Ⓔx II 2 D Ex tb IIIC T80℃...T95℃ Db
Certificates	IECEx; ATEX
Conformity to standards	EN 60079-0, EN 60079-1, EN 60079-31 IEC 60079-0, IEC 60079-1, IEC 60079-31
Enclosure material	Stainless steel or carbon steel
Exposed fastener	Stainless steel
Rated voltage	3~15kV (standard), 24~35kV(optional)
Rated current	Up to max. 800A
	Form of maximum power dissipation and temperature rise

Ta=60℃	T5/T95℃	T6/T80℃
Type	Power consumption (W)	Power consumption (W)
BXJ92-I	371	180
BXJ92-II	575	279

Internal & external earthing	M8/M12
Degree of protection	IP66
Ambient temperature	-60℃≤Ta≤+60℃

Zones 1&2; 21&22

Selection table of BXJ92 series explosion-proof high-voltage junction box (all dimensions in mm)

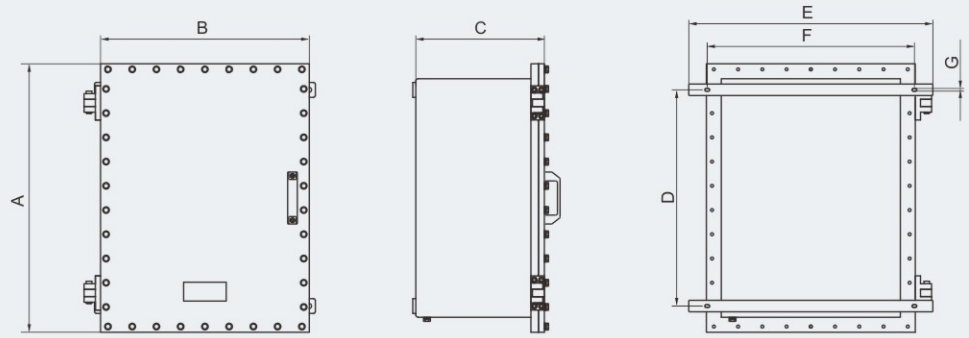

Version	External dimension			Mounting dimension			
	A	B	C	D	E	F	G
BXJ92-IA/□/□	980	720	425	600	800	720	12
BXJ92-IIA/□/□	1280	900	500	1030	1060	900	12

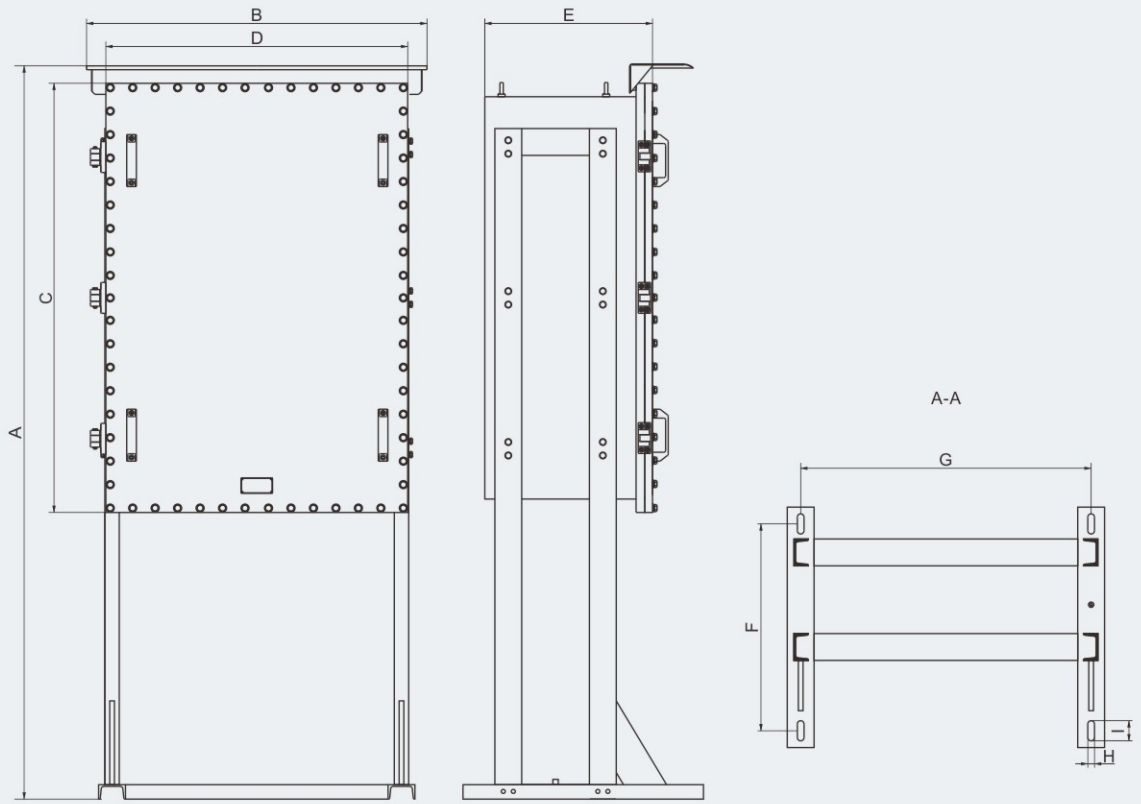

Version	External dimension					Mounting dimension			
	A	B	C	D	E	F	G	H	I
BXJ92-IB/□/□	1945	840	980	720	425	550	686	60	20
BXJ92-IIB/□/□	2195	1015	1280	900	500	617	866	60	20

Terminal Boxes
BXJ93 Series Explosion-proof Fiber Optic Boxes



- Explosion protection to
  - -CENELEC
  - -IEC
  - -NEC
- Can be used in
  - Zone 1 and Zone 2
  - Zone 21 and Zone 22
  - Class I, Zone 1 and Zone 2
  - Class I, Division 2, Groups A , B, C, D
- Enclosure: stainless steel.
- Special requirements on request.
- Features an integrated fiber optic fusion panel, enabling the fusion, fixation, and branching of multiple-core optical fibers, thereby facilitating efficient distribution of optical signals.
- It also offers reserved space for coiling redundant optical fibers, preventing excessive bending and minimizing signal loss.

Catalogue number logic

BXJ93 - □ / □

- H: Heated (optional)
- Model of enclosure: I, II, IIB, III, IIIB
- Explosion-proof fiber optic boxes

Selection table

Type / Ordering code	Number of fibers	Ex-mark	Ambient temperature
BXJ93-I	48	Ex op pr IIC T6 Gb Ex tb IIIC T80℃/T95℃ Db Ⓔx II 2 G Ex op pr IIC T6 Gb Ⓔx II 2 D Ex tb IIIC T80℃/T95℃ Db	-60℃~+60℃
BXJ93-II	96		
BXJ93-IIB	192		
BXJ93-III	144		
BXJ93-IIIB	288		
BXJ93-II/H	96	Ex op pr db eb IIC T5 Gb Ex tb IIIC T80℃/T95℃ Db Ⓔx II 2 G Ex op pr db eb IIC T5 Gb Ⓔx II 2 D Ex tb IIIC T80℃/T95℃ Db	-60℃~+50℃
BXJ93-IIB/H	192		
BXJ93-III/H	144		
BXJ93-IIIB/H	288		

Zones 1&2; 21&22

Technical data

Explosion-proof fiber optic boxes BXJ93-□/□/□

Explosion protection	
Global (IECEx)	IECEx (applied for)
Gas and dust	Ex op pr IIC T6 Gb
	Ex op pr db eb IIC T5 Gb
	Ex tb IIIC T80℃/T95℃ Db
Europe (ATEX)	ATEX (applied for)
Gas and dust	Ⓔx II 2 G Ex op pr IIC T6 Gb
	Ⓔx II 2 G Ex op pr db eb IIC T5 Gb
	Ⓔx II 2 D Ex tb IIIC T80℃/T95℃ Db
Certificates	IECEx; ATEX
Conformity to standards	EN 60079-0, EN 60079-1, EN 60079-7, EN 60079-28, EN 60079-31
	IEC 60079-0, IEC 60079-1, IEC 60079-7, IEC 60079-28, IEC 60079-31
Enclosure material	Stainless steel
Exposed fastener	Stainless steel
Rated voltage	BXJ93-□H: 250V AC 50/60Hz
Number of fibers	48, 96, 192, 144, 288
Internal & external earthing	M8/M12
Degree of protection	IP66
Ambient temperature	-60℃~+60℃(+50℃)

Dimension drawings (all dimensions in mm) - subject to alteration

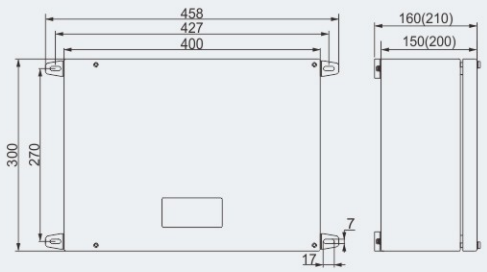

Type I

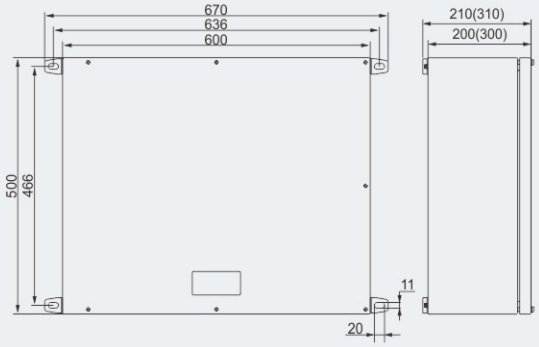

Type II, IIB

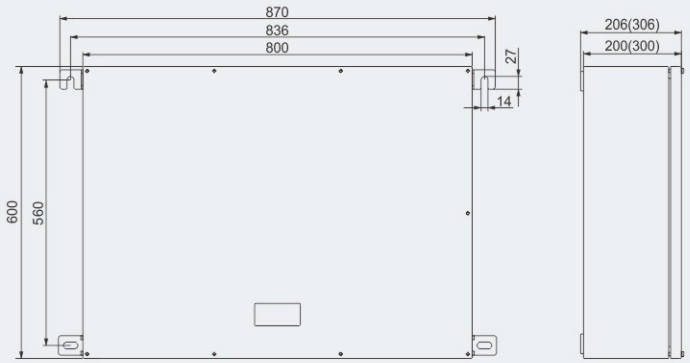

Type III, IIIB

Terminal Boxes
BXJ95 Series Explosion-proof High-voltage Junction Boxes



- Explosion protection to
  -CENELEC
  -IEC
  -NEC
- Can be used in
  Zone 1 and Zone 2
  Zone 21 and Zone 22
  Class I, Zone 1 and Zone 2
  Class I, Division 1, Groups B, C, D
- Flameproof enclosure (Ex d IIB+H_2), which can be used as feed distribution equipment in control and distribution system(such as distribution box, switch box of main circuit ,control box, terminal box or motor starting box etc.)
- Copper-free Aluminium Alloy enclosure, powder coated surface.
- Equipped with specialized hinge structure, which can prevent the flameproof joints from damage when opening and closing the box, and greatly prolong the service life of box.
- The boxes can be combined and installed freely to save space and meet the requirements of various distribution systems.
- Special requirements on request.
- The large space of the enclosure makes it easy for wire assembling.
- Adopting high-precision machining, excellent explosion-proof performance.
- Professionally designed door handles, reliable and safe when opening the door.
- Professionally designed hinges, reliable and safe when opening the door.

Catalogue number logic

BXJ 95 - □ / □ / □

- Rated current (A)
- Rated voltage (V)
- Specification code(VIIIB, IXB)
- Design No.
- Explosion-proof High-voltage junction box

Zones 1&2; 21&22

Technical data

Explosion-proof High-voltage junction boxes BXJ95-□/□/□

Explosion protection	
Global (IECEx)	IECEx PCET 24.0030X
Gas and dust	Ex db IIB+H_2 T6/T5 Gb
	Ex tb IIIC T80℃/T95℃ Db
Europe (ATEX)	ATEX (applied for)
Gas and dust	Ⓔx II 2 G Ex db IIB+H_2 T6/T5 Gb
	Ⓔx II 2 D Ex tb IIIC T80℃/T95℃ Db
Certificates	IECEx; ATEX
Conformity to standards	EN 60079-0, EN 60079-1, EN 60079-31
	IEC 60079-0, IEC 60079-1, IEC 60079-31
Enclosure material	Copper-free Aluminium Alloy enclosure, powder coated surface, window grey (RAL7040)
Exposed fastener	Stainless steel
Rated voltage	Max. 15kV AC
Rated current	Max. 800A
Degree of protection	IP66
Internal&external earthing	M8/M8
Ambient temperature	T6/T80℃ for Tamb: -60℃~+40℃
	T5/T95℃ for Tamb: -60℃~+60℃
Cable entries	Standard M□ x 1.5 plug (the size of entry hole should be processed in accordance with actual requirements), NPT □ plug on request.
Cable gland (optional)	DQM-II (Ex d) or DQM-III (Ex d) is recommended. Please see P7/22~31.
Entry direction	Bottom
Mounting	Surface type (standard)
	Pedestal type (optional)

Dimension drawings (all dimensions in mm) - subject to alteration

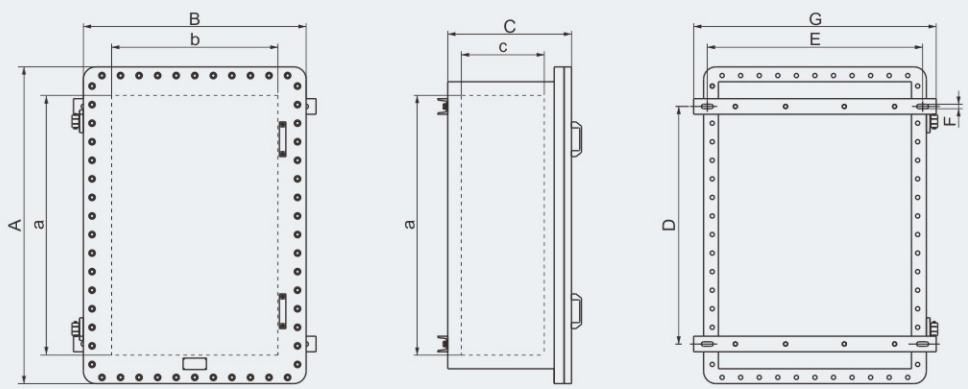

Model	A	B	C	a	b	c	D	E	F	G
BXJ95-VIIIB	980	720	425	800	540	270	660	690	18	800
BXJ95-IXB	1280	900	500	1050	670	330	960	870	18	980

Introduction of the voltage, number of pole , clock position and colour of explosion-proof plugs and sockets

Plug and Sockets are in compliance with the following international standards: IEC60309-1& IEC60309-2, CEIEN60309-1& CEIEN60309-2. They are also in compliance with the standards: VDE0623 &BS4343.

Position of the earthing contact according to IEC60309-2

Voltage (V)	Frequency (Hz)	1P+N+PE		2P+PE		3P+PE		3P+N+PE	
		16A, 32A	63A,125A	16A, 32A	63A,125A	16A, 32A	63A,125A	16A, 32A	63A,125A
57/110~75/130	50 / 60							4	4
100~130	50 / 60	4	4	4	4	4	4		
120/208~144/250	50 / 60							9	9
200~250	50 / 60			6	6	9	9		
200/346~240/415	50 / 60							6	6
220/380~250/440(1)	50 / 60							3	3(3)
250/400~265/460(2)	60							11	11
277	60	5	5	5	5				
277/480~288/500	50 / 60							7	7
347/600~400/690	50 / 60							5	5
380~415	50 / 60			9	9	6	6		
380; 440(1)	50 / 60					3	3(3)		
440~460(2)	60					11	11		
480~500	50 / 60			7	7	7	7		
600~690	50 / 60					5	5		
>50	100~300			10(3)	10(3)	10(3)	10(3)	10(3)	10(3)
>50	>300~500			2	2(3)	2	2(3)	2	2
<50	DC	12							
>50 ~ 250	DC			3	3				
>250	DC			8	8		12		
Supply from an isolating transformer	50 / 60			12	12	12			

(1) Only for refrigeration containers (standardized ISO)

(2) Mainly for marine installations

(3) Non standard

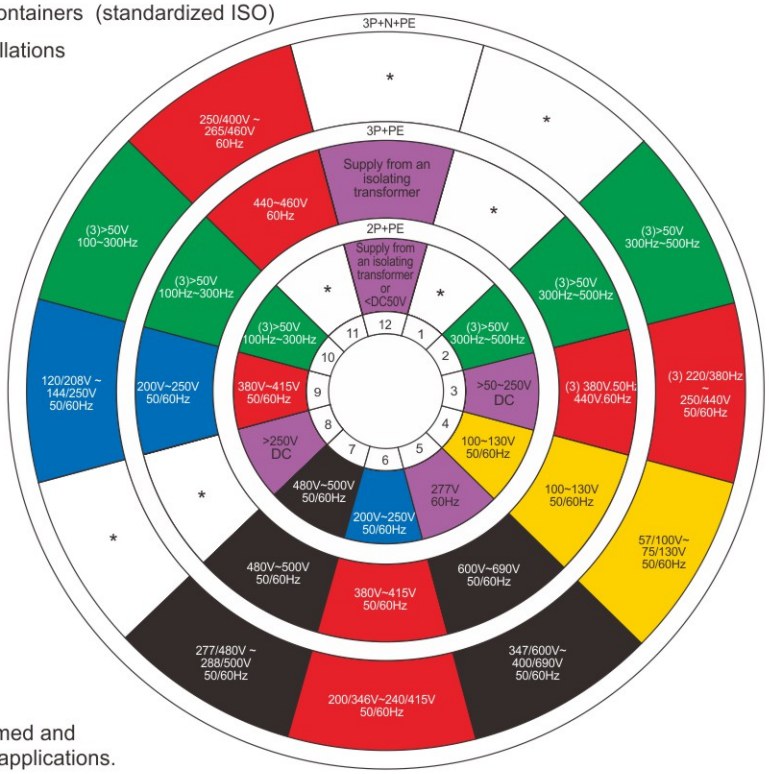

* Clock positions not normed and free for use for special applications.

View: Front side socket or connector

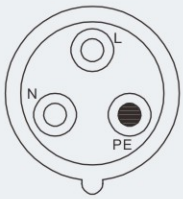

1P+N+PE 4h
100V~130V

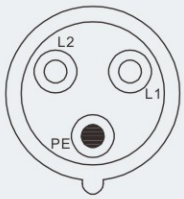

2P+PE 6h
200V~250V

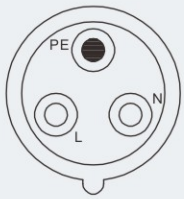

1P+N+PE 12h
< DC50V

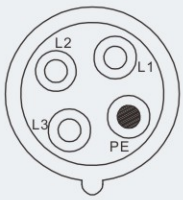

3P+PE 4h
100V~130V

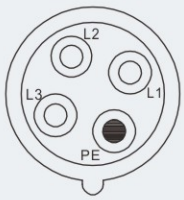

3P+PE 5h
600V~690V

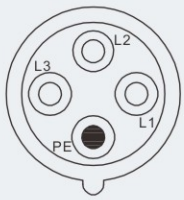

3P+PE 6h
380V~415V

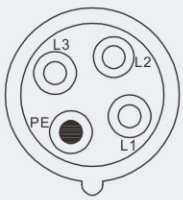

3P+PE 7h
480V~500V

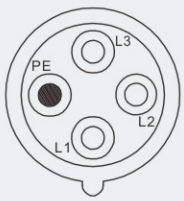

3P+PE 9h
200V~250V

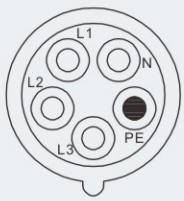

3P+N+PE 4h
57/100V~75/130V

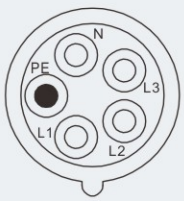

3P+N+PE 9h
120/208V~144/250V

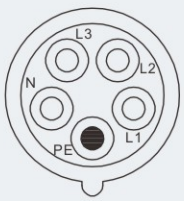

3P+N+PE 6h
200/346V~240/415V

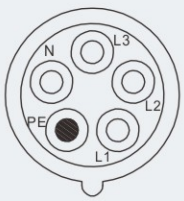

3P+N+PE 7h
277/480V~288/500V

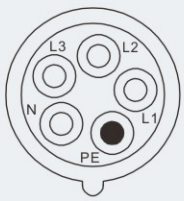

3P+N+PE 5h
347/600V~400/690V

Note: Above drawings show the relationships among the clock position, voltage and pole number of our BCZ8060 series, BCZ85 series and BLJ85 series standard products. The clock position indicates the direction by plughole of socket or connector.

Plugs and Sockets
BCZ8060 Series Explosion-proof Plugs and Sockets



- Explosion protection to
  - -CENELEC
  - -IEC
  - -NEC
- Can be used in
  - Zone 1 and Zone 2
  - Zone 21 and Zone 22
  - Class I, Zone 1 and Zone 2
  - Class I, Division 2, Groups A, B, C, D
- 2P, 3P, 4P and 5P.
- Only the switch in the socket cut off can plug be pulled out, power after inserting the plug.
- GRP (glass fibre-reinforced polyester resin).

Catalogue number logic

BCZ 8060 - □ / □ / □ / □

- □: Z: Socket; T: Plug; L: Coupler
- Number of pole: 2P; 3P (2P+PE or 1P+N+PE); 4P (3P+PE); 5P (3P+N+PE)
- Rated voltage (V): 690: 600~690; 500: 480~500; 415: 380~415; 250: 200~250; 130: 100~130; 50: 50~250; 48: 12~48
- Rated current (A)
- Design No.
- Explosion-proof plugs and sockets

Zones 1&2; 21&22

Selection table

Version	Voltage (V)	Current (A)	Number of pole	Schematic diagram	h	Ordering code	Weight (kg)
BCZ8060-16/□/□ 	480 ~ 500	16(10)	3P+PE		7	30048	1.85
	380 ~ 415		3P+N+PE		6	30049	1.85
			3P+PE		6	30050	1.85
	200 ~ 250		3P+N+PE		6	30051	1.85
			3P+PE		9	30052	1.85
			2P+PE		6	30053	1.85
	100 ~ 130		1P+N+PE		4	30054	1.85
	50 ~ 250		2P+PE		12	30055A	1.80
			2P			30056A	1.80
	12 ~ 48		2P+PE		12	30057A	1.80
			2P			30058A	1.80
BCZ8060-32/□/□ 	600 ~ 690	32(20)	3P+PE		5	30059	2.85
	480 ~ 500		3P+PE		7	30060	2.85
	380 ~ 415		3P+N+PE		6	30061	2.85
			3P+PE		6	30062	2.85
	200 ~ 250		3P+N+PE		6	30063	2.85
			3P+PE		9	30064	2.85
BCZ8060-63/□/□ 	600 ~ 690	63 (50), (60)	3P+PE		5	30080	16.00
	480 ~ 500		3P+PE		7	30081	16.00
	380 ~ 415		3P+N+PE		6	30065	16.00
			3P+PE		6	30066	16.00
	200 ~ 250		3P+N+PE		6	30067A	16.00
			3P+PE		9	30067B	16.00
BCZ8060-125/□/□ 	600 ~ 690	125(100)	3P+PE		5	30068	16.00
	480 ~ 500		3P+PE		7	30069	16.00
	380 ~ 415		3P+N+PE		6	30070	16.00
			3P+PE		6	30071	16.00
	200 ~ 250		3P+N+PE		6	30072	16.00
			3P+PE		9	30073	16.00

Technical data

Explosion-proof plugs and sockets BCZ8060-16/□/□

Explosion protection	
Global (IECEx)	IECEx CNEX 21.0004X
Gas and dust	Ex db eb IIC T6 Gb
	Ex tb IIIC T80℃ Db
Europe (ATEX)	CNEX 21 ATEX 0003X
Gas and dust	Ⓔx II 2 G Ex db eb IIC T6 Gb
	Ⓔx II 2 D Ex tb IIIC T80℃ Db
Certificates	IECEx; ATEX; CU-TR
Conformity to standards	EN 60079-0, EN 60079-1, EN 60079-7, EN 60079-31
	IEC 60079-0, IEC 60079-1, IEC 60079-7, IEC 60079-31
Enclosure material	GRP (glass fibre-reinforced polyester resin)
Exposed fastener	Stainless steel
Rated voltage	AC 480V~500V, 380V~415V, 200V~250V, 100V~130V, 12V~48V
	DC 50V~250V, 12V~48V
Rated current	10A, 16A
Degree of protection	IP66
Ambient temperature	-20℃~+55℃
Cable entries (Socket)	Standard 1 x M25x1.5 cable gland(plastic), 1 x M25x1.5 plug (plastic)
Cable gland (optional)	DQM-I (Ex e) is recommended. Please see P7/18.
Cross section of cable	2.5~4 mm^2

Accessories and spare parts

Version	Voltage (V)	Current (A)	Number of pole	Schematic diagram	h	Colour	Ordering Code	Weight (kg)
16A Coupler	480 ~ 500	16(10)	3P+PE		7	Black	30099	1.30
	380 ~ 415		3P+N+PE		6	Red	30100	1.30
			3P+PE		6	Red	30101	1.30
	200 ~ 250		3P+N+PE		6	Blue	30102	1.30
			3P+PE		9	Blue	30103	1.30
			2P+PE		6	Blue	30104	1.30
	100 ~ 130		1P+N+PE		4	Yellow	30105	1.30
	50 ~ 250		2P+PE		12	Violet	30106A	1.25
			2P			Violet	30107A	1.25
	12 ~ 48		2P+PE		12	Violet	30108A	1.25
			2P			Violet	30109A	1.25

Accessories and spare parts

Version	Voltage (V)	Current (A)	Number of pole	Schematic diagram	h	Colour	Ordering Code	Weight (kg)
16A Socket 	480 ~ 500	16(10)	3P+PE		7	Black	30075	1.50
	380 ~ 415		3P+N+PE		6	Red	30076	1.50
			3P+PE		6	Red	30077	1.50
	200 ~ 250		3P+N+PE		6	Blue	30078	1.50
			3P+PE		9	Blue	30079	1.50
			2P+PE		6	Blue	30080	1.50
	100 ~ 130		1P+N+PE		4	Yellow	30081	1.50
	50 ~ 250		2P+PE		12	Violet	30082A	1.45
			2P			Violet	30083A	1.45
	12 ~ 48		2P+PE		12	Violet	30084A	1.45
			2P			Violet	30085A	1.45
16A Plug 	480 ~ 500	16(10)	3P+PE		7	Black	30087	0.35
	380 ~ 415		3P+N+PE		6	Red	30088	0.35
			3P+PE		6	Red	30089	0.35
	200 ~ 250		3P+N+PE		6	Blue	30090	0.35
			3P+PE		9	Blue	30091	0.35
			2P+PE		6	Blue	30092	0.35
	100 ~ 130		1P+N+PE		4	Yellow	30093	0.35
	50 ~ 250		2P+PE		12	Violet	30094A	0.35
			2P			Violet	30095A	0.35
	12 ~ 48		2P+PE		12	Violet	30096A	0.35
			2P			Violet	30097A	0.35

Technical data

Explosion-proof plugs and sockets BCZ8060-32/□/□

Explosion protection	
Global (IECEx)	IECEx CNEX 21.0004X
Gas and dust	Ex db eb IIC T5 or T4 Gb Ex tb IIIC T80℃ Db
Europe (ATEX)	CNEX 21 ATEX 0003X
Gas and dust	Ⓔx II 2 G Ex db eb IIC T5 or T4 Gb Ⓔx II 2 D Ex tb IIIC T80℃ Db
Certificates	IECEx; ATEX; CU-TR
Conformity to standards	EN 60079-0, EN 60079-1, EN 60079-7, EN 60079-31 IEC 60079-0, IEC 60079-1, IEC 60079-7, IEC 60079-31
Enclosure material	GRP (glass fibre-reinforced polyester resin)
Exposed fastener	Stainless steel
Rated voltage	AC 600V~690V, 480V~500V, 380V~415V, 200V~250V
Rated current	20A, 32A
Degree of protection	IP66
Ambient temperature	T5 for Tamb: -20℃~+40℃, T4 for Tamb: -20℃~+55℃
Cable entries (Socket)	Standard 1 x M40 x 1.5 cable gland (plastic), 1 x M40 x 1.5 plug(plastic)
Cable gland (optional)	DQM-I (Ex e) is recommended. Please see P7/18.
Cross section of cable	4~6 mm^2

Accessories and spare parts

Version	Voltage (V)	Current (A)	Number of pole	Schematic diagram	h	Colour	Ordering Code	Weight (kg)
32A Socket 	600 ~ 690	32(20)	3P+PE		5	Black	30110	1.90
	480 ~ 500		3P+PE		7	Black	30111	1.90
	380 ~ 415		3P+N+PE		6	Red	30112	1.90
			3P+PE		6	Red	30113	1.90
	200 ~ 250		3P+N+PE		6	Blue	30114	1.90
			3P+PE		9	Blue	30115	1.90
32A Plug 	600 ~ 690	32(20)	3P+PE		5	Black	30116	0.95
	480 ~ 500		3P+PE		7	Black	30117	0.95
	380 ~ 415		3P+N+PE		6	Red	30118	0.95
			3P+PE		6	Red	30119	0.95
	200 ~ 250		3P+N+PE		6	Blue	30120	0.95
			3P+PE		9	Blue	30121	0.95
32A Coupler 	600 ~ 690	32(20)	3P+PE		5	Black	30122	1.75
	480 ~ 500		3P+PE		7	Black	30123	1.75
	380 ~ 415		3P+N+PE		6	Red	30124	1.75
			3P+PE		6	Red	30125	1.75
	200 ~ 250		3P+N+PE		6	Blue	30126	1.75
			3P+PE		9	Blue	30127	1.75

Technical data

Explosion-proof plugs and sockets BCZ8060-63/□/□

Explosion protection	
Global (IECEx)	IECEx CNEX 21.0004X
Gas and dust	Ex db eb IIC T5 or T4 Gb
	Ex tb IIIC T80℃ Db
Europe (ATEX)	CNEX 21 ATEX 0003X
Gas and dust	Ⓔx II 2 G Ex db eb IIC T5 or T4 Gb
	Ⓔx II 2 D Ex tb IIIC T80℃ Db
Certificates	IECEx; ATEX; CU-TR
Conformity to standards	EN 60079-0, EN 60079-1, EN 60079-7, EN 60079-31
	IEC 60079-0, IEC 60079-1, IEC 60079-7, IEC 60079-31
Enclosure material	GRP (glass fibre-reinforced polyester resin)
Exposed fastener	Stainless steel
Rated voltage	AC 600V~690V, 480V~500V, 380V~415V, 200V~250V
Rated current	50A, 60A, 63A
Degree of protection	IP66
Ambient temperature	T5 for Tamb: -20℃~+40℃, T4 for Tamb: -20℃~+55℃
Cable entries (Socket)	Standard 1 x M50x1.5 cable gland (plastic), 1 x M50x1.5 plug (plastic)
Cable gland (optional)	DQM-I (Ex e) is recommended. Please see P7/18.
Cross section of cable	10~16 mm^2

Accessories and spare parts

Version	Voltage (V)	Current (A)	Number of pole	Schematic diagram	h	Colour	Ordering Code	Weight (kg)
63A Socket	600 ~ 690	63 (50), (60)	3P+PE		5	Black	30128A	14.30
	480 ~ 500		3P+PE		7	Black	30129A	14.30
	380 ~ 415		3P+N+PE		6	Red	30130A	14.30
			3P+PE		6	Red	30131A	14.30
	200 ~ 250		3P+N+PE		6	Blue	30132A	14.30
			3P+PE		9	Blue	30133A	14.30
63A Plug	600 ~ 690	63 (50), (60)	3P+PE		5	Black	30128B	1.70
	480 ~ 500		3P+PE		7	Black	30129B	1.70
	380 ~ 415		3P+N+PE		6	Red	30130B	1.70
			3P+PE		6	Red	30131B	1.70
	200 ~ 250		3P+N+PE		6	Blue	30132B	1.70
			3P+PE		9	Blue	30133B	1.70

Technical data

Explosion-proof plugs and sockets BCZ8060-125/□/□

Explosion protection	
Global (IECEx)	IECEx CNEX 21.0004X
Gas and dust	Ex db eb IIC T4 Gb
	Ex tb IIIC T80℃ Db
Europe (ATEX)	CNEX 21 ATEX 0003X
Gas and dust	Ⓔx II 2 G Ex db eb IIC T4 Gb
	Ⓔx II 2 D Ex tb IIIC T80℃ Db
Certificates	IECEx; ATEX; CU-TR
Conformity to standards	EN 60079-0, EN 60079-1, EN 60079-7, EN 60079-31
	IEC 60079-0, IEC 60079-1, IEC 60079-7, IEC 60079-31
Enclosure material	GRP (glass fibre-reinforced polyester resin)
Exposed fastener	Stainless steel
Rated voltage	AC 600V~690V, 480V~500V, 380V~415V, 200V~250V
Rated current	100A, 125A
Degree of protection	IP66
Ambient temperature	-20℃~+55℃
Cable entries (Socket)	Standard 1 x M63x1.5 cable gland (plastic), 1 x M63x1.5 plug (plastic)
Cable gland (optional)	DQM-I (Ex e) is recommended. Please see P7/18.
Cross section of cable	25~35 mm^2

Accessories and spare parts

Version	Voltage (V)	Current (A)	Number of pole	Schematic diagram	h	Colour	Ordering Code	Weight (kg)
125A Socket 	600 ~ 690	125(100)	3P+PE		5	Black	30134	14.30
	480 ~ 500		3P+PE		7	Black	30135	14.30
	380 ~ 415		3P+N+PE		6	Red	30136	14.30
			3P+PE		6	Red	30137	14.30
	200 ~ 250		3P+N+PE		6	Blue	30138	14.30
			3P+PE		9	Blue	30139	14.30
125A Plug 	600 ~ 690	125(100)	3P+PE		5	Black	30140	1.70
	480 ~ 500		3P+PE		7	Black	30141	1.70
	380 ~ 415		3P+N+PE		6	Red	30142	1.70
			3P+PE		6	Red	30143	1.70
	200 ~ 250		3P+N+PE		6	Blue	30144	1.70
			3P+PE		9	Blue	30145	1.70

Dimension drawings (all dimensions in mm) - subject to alteration

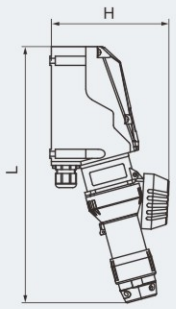

Plug and socket

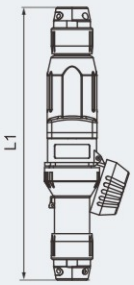

Coupler (L)

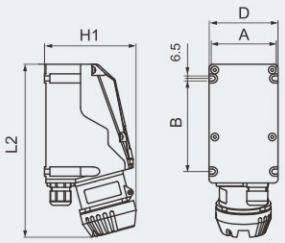

Socket (Z)

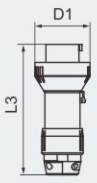

Plug (T)

BCZ8060-16/□/□
BCZ8060-32/□/□

Version	L	H	L1	L2	H1	D	A	B	L3	D1
BCZ8060-16/□/(2P/3P)	336	154	356	227	120	90	80	122	171	72
BCZ8060-16/□/(4P/5P)	408	175	460	252	151	110	102	150	217	76.5
BCZ8060-32/□/□	460	209	514	283	171	120	113	169	253	95

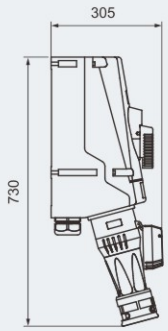

Plug and socket

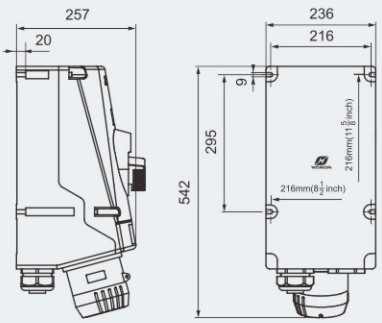

Socket (Z)

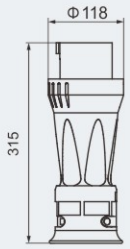

Plug (T)

BCZ8060-63/□/□
BCZ8060-125/□/□

Plugs and Sockets
BCZ85 Series Explosion-proof Plugs and Sockets



- Explosion protection to
  -CENELEC
  -IEC
  -NEC
- Can be used in
  Zone 1 and Zone 2
  Zone 21 and Zone 22
  Class I, Zone 1 and Zone 2
  Class I, Division 1, Groups A, B, C, D
- Four enclosure types; Four current ratings (16A, 32A, 63A, 125A); 3P, 4P or 5P.
- Only the switch in the socket cut off can plug be pulled out, power after inserting the plug.
- Copper-free Aluminium Alloy enclosure, powder coated surface.

Catalogue number logic

BCZ 85 - □ / □ / □ / □

- □ (last): Z: Socket; T: Plug
- □ (4th): Number of pole: 3P (2P+PE); 4P (3P+PE); 5P (3P+N+PE)
- □ (3rd): Rated voltage (V): 48: 12~48; 50: 50~250; 130: 100~130, 57/100~75/130; 250: 200~250, 120/208~144/250; 415: 380~415, 200/346~240/415; 500: 480~500, 277/480~288/500; 690: 600~690, 347/600~400/690
- □ (2nd): Rated current (A)
- 85: Design No.
- BCZ: Explosion-proof plug and sockets

Zones 1&2; 21&22

Selection table

Version	Current (A)	Voltage (V)	Number of pole	Schematic diagram	h	Colour	Ordering code	Weight (kg)
BCZ85-16/□/□ 	16(10)	12~48	2P			Violet	30146A	2.60
		50~250				Violet	30146B	2.60
		12~48	2P+PE		12	Violet	30146C	2.60
		50~250			12	Violet	30146D	2.60
		100~130			4	Yellow	30147	2.60
		200~250			6	Blue	30148	2.60
		100~130	3P+PE		4	Yellow	30149	2.60
		200~250			9	Blue	30150	2.60
		380~415			6	Red	30151	2.60
		480~500			7	Black	30152	2.60
		600~690			5	Black	30153	2.60
		57/100~75/130	3P+N+PE		4	Yellow	30154	3.40
		120/208~144/250			9	Blue	30155	3.40
		200/346~240/415			6	Red	30156	3.40
		277/480~288/500			7	Black	30157	3.40
		347/600~400/690			5	Black	30158	3.40
BCZ85-32/□/□ 	32(20)	200~250	2P+PE		6	Blue	30159	3.40
		200~250	3P+PE		9	Blue	30160	3.40
		380~415			6	Red	30161	3.40
		480~500			7	Black	30162	3.40
		600~690			5	Black	30163	3.40
		120/208~144/250	3P+N+PE		9	Blue	30164	3.40
		200/346~240/415			6	Red	30165	3.40
		277/480~288/500			7	Black	30166	3.40
		347/600~400/690			5	Black	30167	3.40
BCZ85-63/□/□ 	63 (50), (60)	200~250	3P+PE		9	Blue	30168	4.50
		380~415			6	Red	30169	4.50
		480~500			7	Black	30170	4.50
		600~690			5	Black	30171	4.50
		200/346~240/415	3P+N+PE		6	Red	30172	4.50
		277/480~288/500			7	Black	30173	4.50
BCZ85-125/□/□ 	125(100)	200~250	3P+PE		9	Blue	30174	20.0
		380~415			6	Red	30175	20.0
		480~500			7	Black	30176	20.0
		600~690			5	Black	30177	20.0
		200/346~240/415	3P+N+PE		6	Red	30178	20.0
		277/480~288/500			7	Black	30179	20.0

Technical data

Explosion-proof plug and sockets BCZ85-16/□/□

Explosion protection	
Global (IECEx)	IECEx CNEX 19.0015X
Gas and dust	Ex db IIC T6 Gb Ex tb IIIC T80℃ Db
Europe (ATEX)	CNEX 19 ATEX 0023X
Gas and dust	Ⓔx II 2 G Ex db IIC T6 Gb Ⓔx II 2 D Ex tb IIIC T80℃ Db
Certificates	IECEx; ATEX; CU-TR
Conformity to standards	EN 60079-0, EN 60079-1, EN 60079-31 IEC 60079-0, IEC 60079-1, IEC 60079-31
Enclosure material	Copper-free Aluminium Alloy, powder coated surface
Enclosure colour	Window grey (RAL7040)
Exposed fastener	Stainless steel
Rated voltage	Max. 690V AC, Max. 250V DC
Rated current	10A, 16A
Number of pole	3P (2P+PE), 4P (3P+PE), 5P (3P+N+PE)
Degree of protection	IP66
Internal&external earthing	M5/M5
Ambient temperature	-60℃~+60℃
Cable entry of socket	2 x M25 x 1.5(3P/4P), 2 x M32 x 1.5(5P)
Cable entry of plug	1 x M25 x 1.5(3P/4P) , 1 x M32 x 1.5(5P)
Cable gland (optional)	DQM-II (Ex d) or DQM-III (Ex d) is recommended. Please see P7/22~31.
Cross section of cable	2.5~4 mm^2

Dimension drawings (all dimensions in mm) - subject to alteration

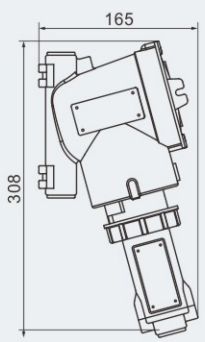

Plug and Sockets

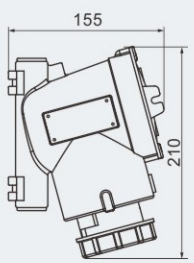

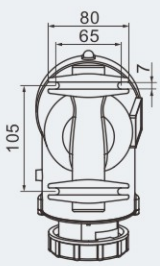

Socket

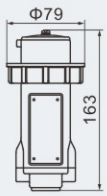

Plug

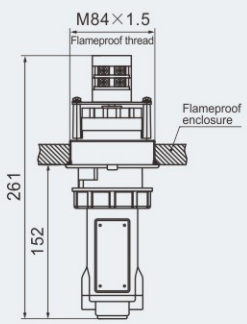

Install on the flameproof enclosure

BCZ85-16/□/3P
BCZ85-16/□/4P

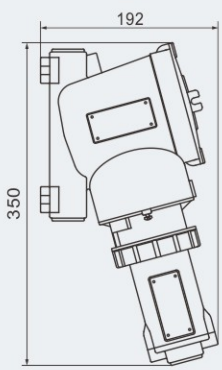

Plug and Sockets

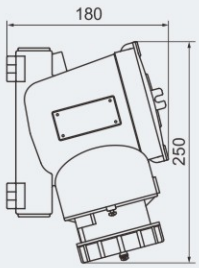

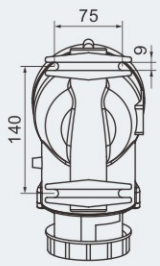

Socket

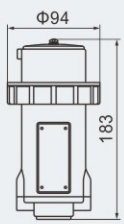

Plug

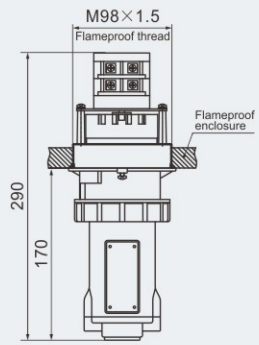

Install on the flameproof enclosure

BCZ85-16/□/5P

Technical data

Explosion-proof plug and sockets BCZ85-32/□/□

Explosion protection	
Global (IECEx)	IECEx CNEX 19.0015X
Gas and dust	Ex db IIC T6 Gb
	Ex tb IIIC T80℃ Db
Europe (ATEX)	CNEX 19 ATEX 0023X
Gas and dust	Ⓔx II 2 G Ex db IIC T6 Gb
	Ⓔx II 2 D Ex tb IIIC T80℃ Db
Certificates	IECEx; ATEX; CU-TR
Conformity to standards	EN 60079-0, EN 60079-1, EN 60079-31
	IEC 60079-0, IEC 60079-1, IEC 60079-31
Enclosure material	Copper-free Aluminium Alloy, powder coated surface
Enclosure colour	Window grey (RAL7040)
Exposed fastener	Stainless steel
Rated voltage	Max. 690V AC
Rated current	20A, 32A
Number of pole	3P (2P+PE), 4P (3P+PE), 5P (3P+N+PE)
Degree of protection	IP66
Internal&external earthing	M5/M5
Ambient temperature	-60℃~+60℃
Cable entry of socket	2 x M32 x 1.5
Cable entry of plug	1 x M32 x 1.5
Cable gland (optional)	DQM-II (Ex d) or DQM-III (Ex d) is recommended. Please see P7/22~31.
Cross section of cable	4~6 mm^2

Dimension drawings (all dimensions in mm) - subject to alteration

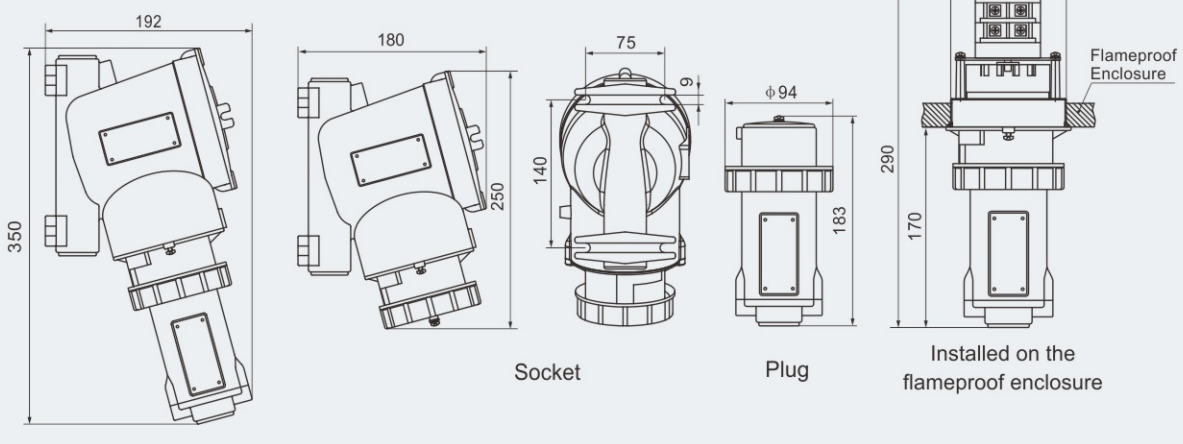

Plug and Sockets

BCZ85-32/□/□

Technical data

Explosion-proof plug and sockets BCZ85-63/□/□

Explosion protection	
Global (IECEx)	IECEx CNEX 19.0021X
Gas and dust	Ex db IIC T6 Gb
	Ex tb IIIC T80℃ Db
Europe (ATEX)	CNEX 19 ATEX 0030X
Gas and dust	Ⓔx II 2 G Ex db IIC T6 Gb
	Ⓔx II 2 D Ex tb IIIC T80℃ Db
Certificates	IECEx; ATEX; CU-TR
Conformity to standards	EN 60079-0, EN 60079-1, EN 60079-31
	IEC 60079-0, IEC 60079-1, IEC 60079-31
Enclosure material	Copper-free Aluminium Alloy, powder coated surface
Enclosure colour	Window grey (RAL7040)
Exposed fastener	Stainless steel
Rated voltage	Max. 690V AC
Rated current	50A, 60A, 63A
Number of pole	4P (3P+PE), 5P (3P+N+PE)
Degree of protection	IP66
Internal&external earthing	M6/M8
Ambient temperature	-60℃~+60℃
Cable entry of socket	2 x M40 x 1.5
Cable entry of plug	1 x M50 x 1.5
Cable gland (optional)	DQM-II (Ex d) or DQM-III (Ex d) is recommended. Please see P7/22~31.
Cross section of cable	10~16 mm^2

Dimension drawings (all dimensions in mm) - subject to alteration

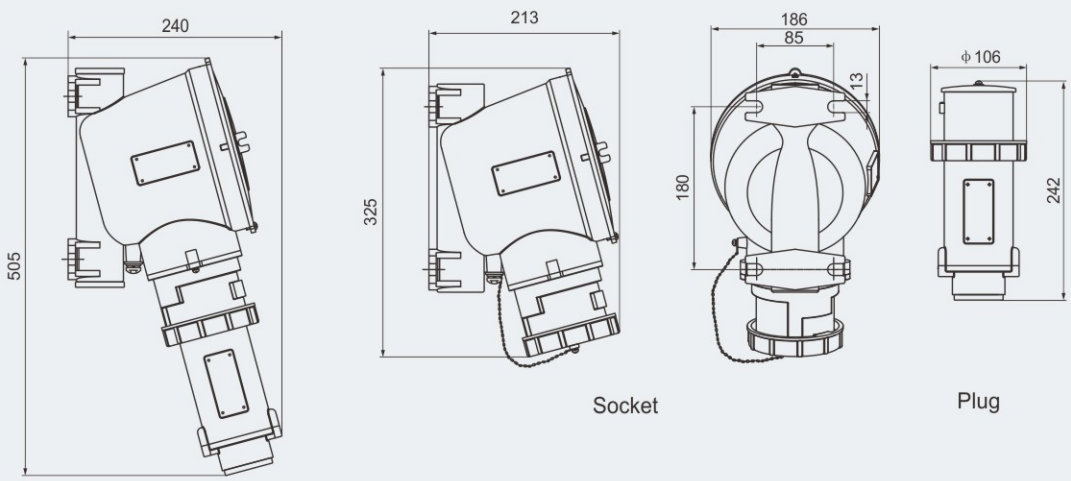

Plug and Sockets

Socket

Plug

BCZ85-63/□/□

Technical data

Explosion-proof plug and sockets BCZ85-125/□/□

Explosion protection	
Global (IECEx)	IECEx CNEX 19.0020X
Gas and dust	Ex db IIC T6 Gb
	Ex tb IIIC T80℃ Db
Europe (ATEX)	CNEX 19 ATEX 0029X
Gas and dust	Ⓔx II 2 G Ex db IIC T6 Gb
	Ⓔx II 2 D Ex tb IIIC T80℃ Db
Certificates	IECEx; ATEX; CU-TR
Conformity to standards	EN 60079-0, EN 60079-1, EN 60079-31
	IEC 60079-0, IEC 60079-1, IEC 60079-31
Enclosure material	Copper-free Aluminium Alloy, powder coated surface
Enclosure colour	Window grey (RAL7040)
Exposed fastener	Stainless steel
Rated voltage	Max. 690V AC
Rated current	100A, 125A
Number of pole	4P (3P+PE), 5P (3P+N+PE)
Degree of protection	IP66
Internal&external earthing	M6/M8
Ambient temperature	-60℃~+58℃
Cable entry of socket	1 x M63 x 1.5
Cable entry of plug	1 x M50 x 1.5
Cable gland (optional)	DQM-II (Ex d) or DQM-III (Ex d) is recommended. Please see P7/22~31.
Cross section of cable	25~35 mm^2

Dimension drawings (all dimensions in mm) - subject to alteration

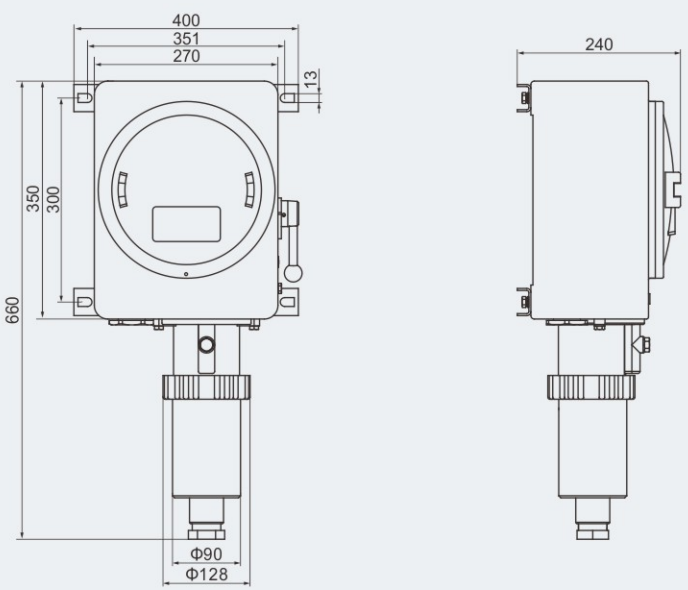

BCZ85-125/□/□

Plugs and Sockets
BLJ85 Series Explosion-proof Connector

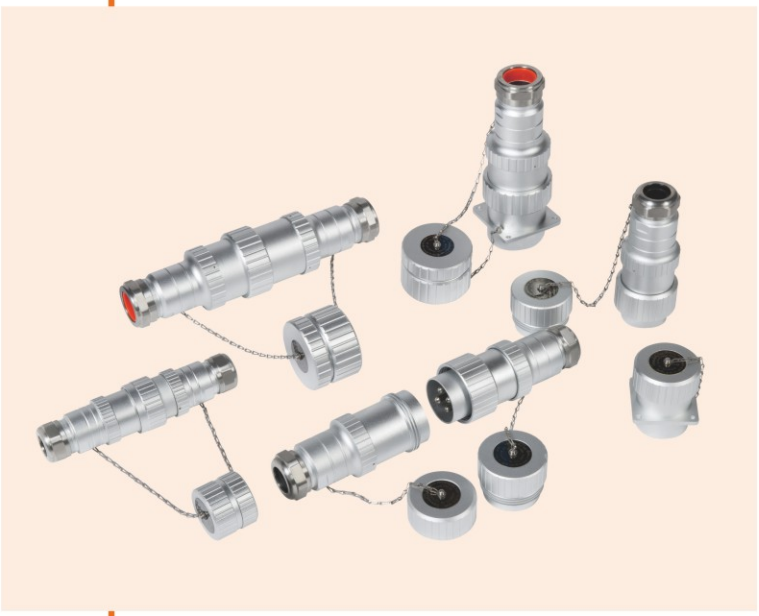

- Explosion protection to
  - -CENELEC
  - -IEC
  - -NEC
- Can be used in
  - Zone 2
  - Zone 21 and Zone 22
  - Class I, Zone 2
  - Class I, Division 2, Groups A, B, C, D
- 4 enclosure types; 9 current ratings (10A, 16A, 20A, 25A, 32A, 50A, 60A, 63A, 100A); 3P, 4P and 5P.
- Copper-free Aluminium Alloy enclosure, anodic-oxidation treatment for surface.

Catalogue number logic

BLJ 85 - □ / □ / □ / □

- □: L: Movable connector; G: Fixed connector
- Rated current (A)
- Design No.
- Explosion-proof connector
- No. of poles: 3P: 2P+PE or 1P+N+PE; 4P: 3P+PE; 5P: 3P+N+PE
- Rated voltage: 690: 600...690V AC; 500: 480...500V AC; 415: 380...415V AC; 250: 200...250V AC; 130: 100...130V AC; 250DC: 50...250V DC; 48: 12...48V AC/DC

Zones 2; 21&22

Technical data

Explosion-proof connector BLJ85 - □ / □ / □ / □

Explosion protection	
Global (IECEx)	IECEx CNEX 23.0003X
Gas and dust	Ex ec IIC T6/T5 Gc Ex tb IIIC T80℃ Db
Europe (ATEX)	CNEX 23 ATEX 0006X(Gas), CNEX 23 ATEX 0007X(Dust)
Gas and dust	Ⓔx II 3 G Ex ec IIC T6/T5 Gc Ⓔx II 2 D Ex tb IIIC T80℃ Db
Certificates	IECEx; ATEX
Conformity to standards	EN 60079-0, EN 60079-7, EN 60079-31 IEC 60079-0, IEC 60079-7, IEC 60079-31
Enclosure material	Copper-free Aluminium Alloy, anodic-oxidation treatment for surface
Exposed fastener	Stainless steel
Rated voltage	AC 380...415V, 200...250V, 100...130V; DC 50...250V; AC/DC 12...48V
Rated current	10A, 16A
Degree of protection	IP66
Ambient temperature	T6: -60℃~+40℃, T5: -60℃~+60℃
Cable gland	Suitable for cables of Φ9~Φ14 (mm)

Selection table

Version	Voltage (V)	Current (A)	Number of pole	Schematic diagram	h	Colour	Ordering code	Weight (kg)
BLJ85-10/□/□ BLJ85-16/□/□	AC 100...130	10/16	1P+N+PE		12	Yellow	30180	0.30
	AC 200...250	10/16	1P+N+PE		12	Blue	30181	0.30
	AC 200...250	10/16	2P+PE		12	Blue	30182	0.30
	AC 200...250	10/16	3P+PE		12	Blue	30183	0.30
	AC 380...415	10/16	3P+PE		12	Red	30184	0.30
	AC 380...415	10/16	3P+N+PE		12	Red	30185	0.32
	DC20...250V	10/16	2P+PE		12	White	30186	0.30
	AC/DC12...48V	10/16	2P+PE		12	Purple	30187	0.30



Installation method

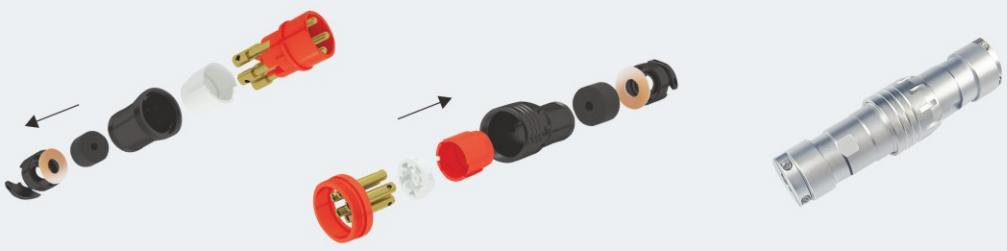

Technical data

Explosion-proof connector BLJ85 - □ / □ / □ / □

Explosion protection	
Global (IECEx)	IECEx CNEX 23.0003X
Gas and dust	Ex ec IIC T5/T4 Gc Ex tb IIIC T80℃/T95℃ Db
Europe (ATEX)	CNEX 23 ATEX 0006X(Gas), CNEX 23 ATEX 0007X(Dust)
Gas and dust	Ⓔx II 3 G Ex ec IIC T5/T4 Gc Ⓔx II 2 D Ex tb IIIC T80℃/T95℃ Db
Certificates	IECEx; ATEX
Conformity to standards	EN 60079-0, EN 60079-7, EN 60079-31 IEC 60079-0, IEC 60079-7, IEC 60079-31
Enclosure material	Copper-free aluminium Alloy, anodic-oxidation treatment for surface
Exposed fastener	Stainless steel
Rated voltage	AC 600...690V, 480...500V, 380...415V, 200...250V
Rated current	20A, 25A, 32A, 50A, 60A, 63A, 100A
Degree of protection	IP66
Ambient temperature	T5: -60℃~+40℃, T4: -60℃~+60℃
Cable gland	

25A/32A	63A	100A
Φ17...Φ24mm	Φ26...Φ32mm	Φ28...Φ41mm

Selection table

Version	Voltage (V)	Current (A)	Number of pole	Schematic diagram	h	Colour	Ordering code	Weight (kg)
BLJ85-20/□/□ BLJ85-25/□/□ BLJ85-32/□/□ 	200...250	20/25/32	3P+PE		9	Blue	30189	1.10
	200...250	20/25/32	3P+N+PE		6	Blue	30190	1.20
	380...415	20/25/32	3P+PE		6	Red	30191	1.10
	380...415	20/25/32	3P+N+PE		6	Red	30192	1.20
	480...500	20/25/32	3P+PE		7	Black	30193	1.10
	600...690	20/25/32	3P+PE		5	Black	30194	1.10
BLJ85-50/□/□ BLJ85-60/□/□ BLJ85-63/□/□ 	200...250	50/60/63	3P+PE		7	Blue	30195	1.80
	200...250	50/60/63	3P+N+PE		6	Blue	30196	1.85
	380...415	50/60/63	3P+PE		6	Red	30197	1.80
	380...415	50/60/63	3P+N+PE		6	Red	30198	1.85
	480...500	50/60/63	3P+PE		7	Black	30199	1.80
	600...690	50/60/63	3P+PE		5	Black	30200	1.80
BLJ85-100/□/□ 	200...250	100	3P+PE		7	Blue	30201	2.50
	200...250	100	3P+N+PE		6	Blue	30202	2.60
	380...415	100	3P+PE		6	Red	30203	2.50
	380...415	100	3P+N+PE		6	Red	30204	2.60
	480...500	100	3P+PE		7	Black	30205	2.50
	600...690	100	3P+PE		5	Black	30206	2.50

Dimension drawings (all dimensions in mm) - subject to alteration

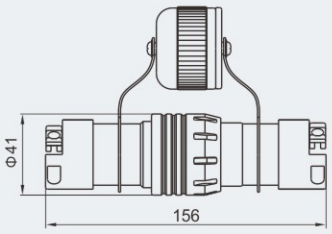

Movable connector

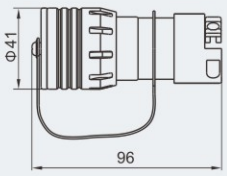

Plug

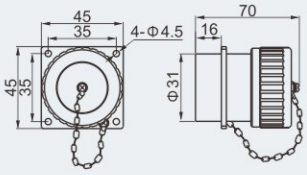

Socket assembly (Fixed connector)

BLJ85-10, BLJ85-16

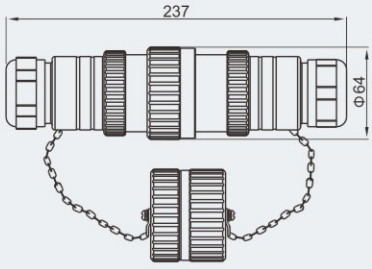

Movable connector

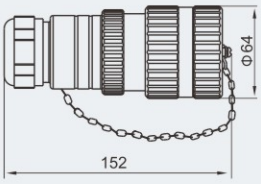

Plug

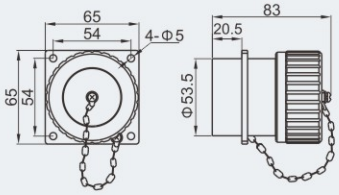

Socket assembly (Fixed connector)

BLJ85-20, BLJ85-25, BLJ85-32

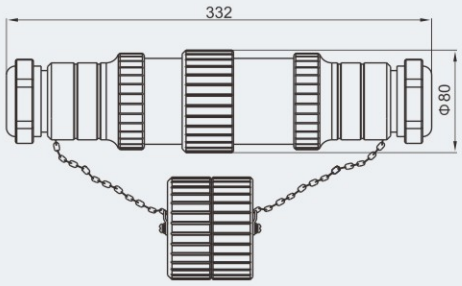

Movable connector

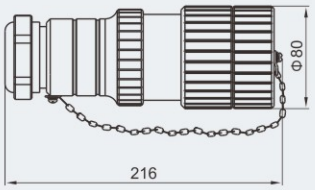

Plug

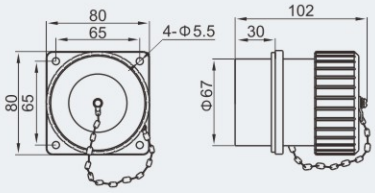

Socket assembly (Fixed connector)

BLJ85-50, BLJ85-60, BLJ85-63

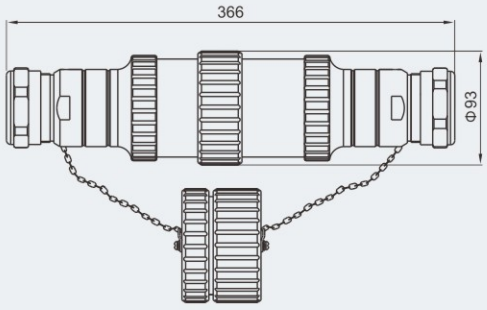

Movable connector

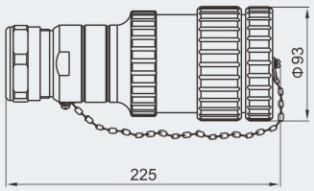

Plug

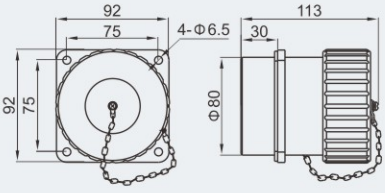

Socket assembly (Fixed connector)

BLJ85-100

4

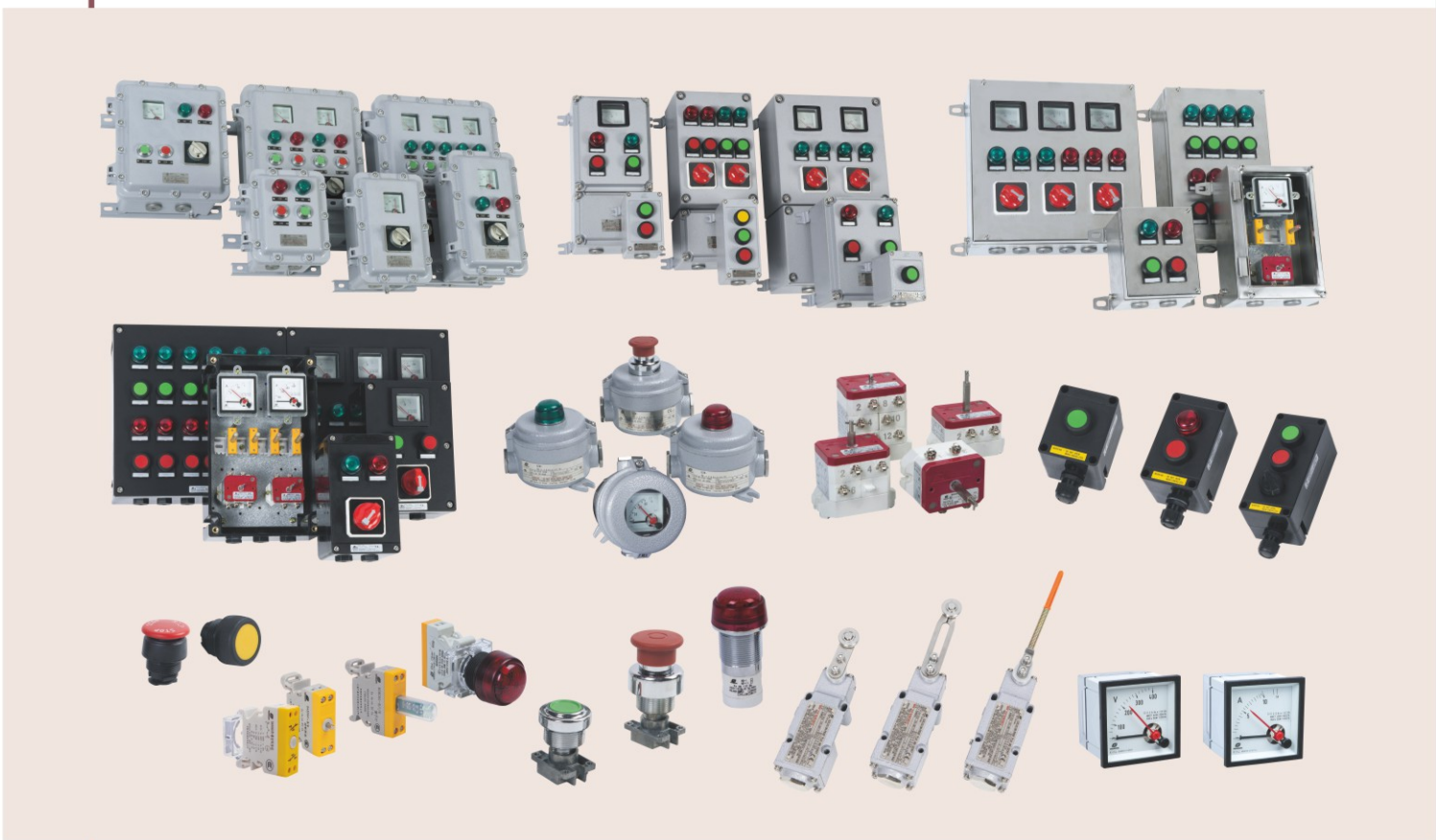

Control Equipments

Contents

Position Switches

HRZX91 Series Explosion-proof Position Switches (Ex db IIC) 4/2

Control Stations

BZC Series Explosion-proof Control Stations (Ex db IIB+H_2) 4/6

Components for BZC Control Stations

HA Flameproof Push Button (Ex db IIC) 4/10

HD Series Indicators (Ex db IIC) 4/14

HK Series Control Switches (Ex db IIC) 4/16

Control Unit Systems and Control Stations

BZA85 Series Explosion-proof Control Unit Systems (Ex db IIC, Copper-free Aluminum Alloy Enclosure) 4/20

BZC8050 Series Control Stations (Ex db eb mb IIC, Ex db eb IIC, GRP Enclosure) 4/24

BZC8050 Series Control Stations (Ex db eb mb IIC, Ex db eb IIC, Copper-free Aluminium Alloy Enclosure) 4/28

BZC8050 Series Control Stations (Ex db eb mb IIC, Ex db eb IIC, Stainless Steel Enclosure) 4/32

BZC-HMI Series Explosion-proof Touchscreen (Ex db eb nA IIC) 4/36

Components for BZC8050 Control Stations

BA8060 Series Control Buttons (Ex db eb IIC) 4/38

BD8060 Series Indicators (Ex db eb IIC) 4/42

BK8050 Series Control Switches (Ex db eb IIC) 4/45

BB8050 Series Explosion-proof Ammeters/Voltmeters (Ex eb IIC, Ex eb mb IIC) 4/51

HRFM Series Explosion-proof Buzzer (Ex eb ib mb IIC, Ex db ib mb IIC) 4/54

More products are under development. Please contact us or visit our website for the latest product development. We reserve the right to make alteration to the technical data, weight, dimensions, designs and products available without notice.

Position Switches
HRZX91 Series Explosion-proof Position Switches

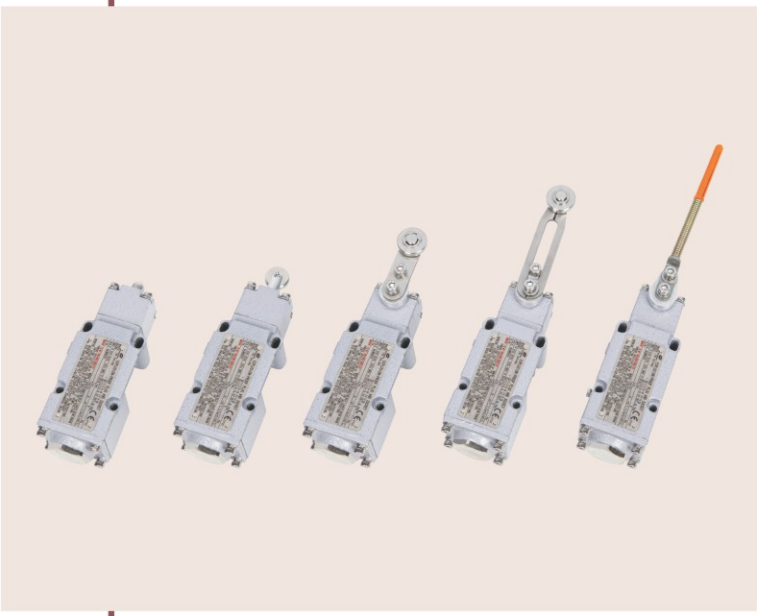

- Explosion protection to
  -CENELEC
  -IEC
- Can be used in
  Zone 1 and Zone 2
  Zone 21 and Zone 22
- Types: D, Z, L, N, K.
- Copper-free Aluminium Alloy enclosure, powder coated surface.

Catalogue number logic

HRZX 91 - □ □

- Movement code
  - I: 1NC+1NC Sync, quick action
  - II: 1NC+1NO Sync, quick action
  - III: 1NO+1NO Sync, slow action
  - IV: 1NC+1NC Sync, slow action
  - V: 1NC+1NO Break-before-make, slow action
  - VI: 1NO+1NC Make-before-break, slow action
- Type
  - D: single-arm roller
  - Z: extended plunger
  - L: roller plunger
  - N: Flexible contact
  - K: Adjustable-arm roller
- Design No.
- Explosion-proof position switches

Zones 1&2; 21&22

Selection table

Version	Rated voltage	Rated current (A)	Type of contact	Ordering code
HRZX91-D	380V AC	3	1NC+1NC Sync, quick action	40001a
			1NC+1NO Sync, quick action	40001b
			1NO+1NO Sync, slow action	40001c
			1NC+1NC Sync, slow action	40001d
			1NC+1NO Break-before-make, slow action	40001e
			1NO+1NC Make-before-break, slow action	40001f
HRZX91-Z	380V AC	3	1NC+1NC Sync, quick action	40002a
			1NC+1NO Sync, quick action	40002b
			1NO+1NO Sync, slow action	40002c
			1NC+1NC Sync, slow action	40002d
			1NC+1NO Break-before-make, slow action	40002e
			1NO+1NC Make-before-break, slow action	40002f
HRZX91-L	380V AC	3	1NC+1NC Sync, quick action	40003a
			1NC+1NO Sync, quick action	40003b
			1NO+1NO Sync, slow action	40003c
			1NC+1NC Sync, slow action	40003d
			1NC+1NO Break-before-make, slow action	40003e
			1NO+1NC Make-before-break, slow action	40003f
HRZX91-N	380V AC	3	1NC+1NC Sync, quick action	40004a
			1NC+1NO Sync, quick action	40004b
			1NO+1NO Sync, slow action	40004c
			1NC+1NC Sync, slow action	40004d
			1NC+1NO Break-before-make, slow action	40004e
			1NO+1NC Make-before-break, slow action	40004f
HRZX91-K	380V AC	3	1NC+1NC Sync, quick action	40005a
			1NC+1NO Sync, quick action	40005b
			1NO+1NO Sync, slow action	40005c
			1NC+1NC Sync, slow action	40005d
			1NC+1NO Break-before-make, slow action	40005e
			1NO+1NC Make-before-break, slow action	40005f

Movement diagram

Code	Contact type	Schematic diagram	Movement diagram	Action diagram of rocker arms	Action diagram of plungers
I	1NC+1NC Sync, quick action	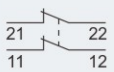	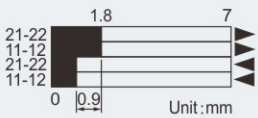	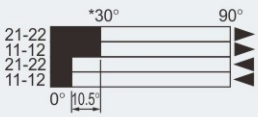	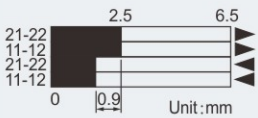
II	1NC+1NO Sync, quick action	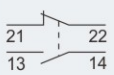	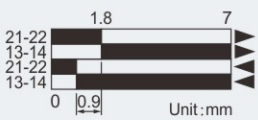	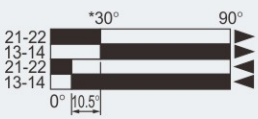	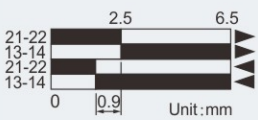
III	1NO+1NO Sync, slow action	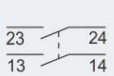		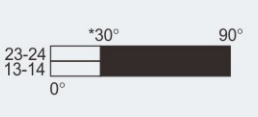	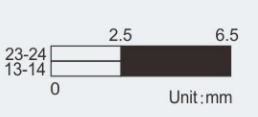
IV	1NC+1NC Sync, slow action	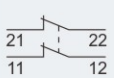	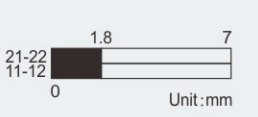	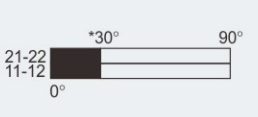	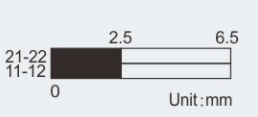
V	1NC+1NO Break-before-make, slow action	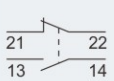	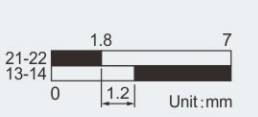	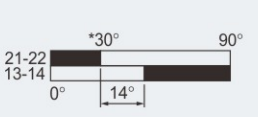	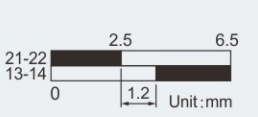
VI	1NO+1NC Make-before-break, slow action	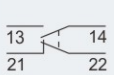	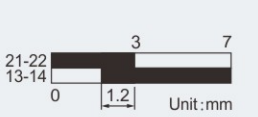	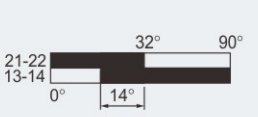	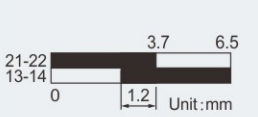

Note: The size with "*" has a certain error, and the Angle can be adjusted by adjusting the starting position of the rocker arm.

Technical data

Explosion-proof position switches HRZX91-□

Explosion protection					
Global (IECEx)	IECEx NEP 20.0010X				
Gas and dust	Ex db IIC T6 Gb Ex tb IIIC T80℃ Db				
Europe (ATEX)	PTB 20 ATEX 1010X				
Gas and dust	Ⓔx II 2 G Ex db IIC T6 Gb Ⓔx II 2 D Ex tb IIIC T80℃ Db				
Certificates	IECEx; ATEX				
Conformity to standards	EN 60079-0, EN 60079-1, EN 60079-31 IEC 60079-0, IEC 60079-1, IEC 60079-31				
Enclosure material	Copper-free Aluminium Alloy, powder coated surface				
Enclosure colour	Window grey (RAL7040)				
Exposed fastener	Stainless steel				
Type of contact	1NO+1NC or 2NO or 2NC				
Swing angle or distance of roller arm	HRZX91-D	HRZX91-Z	HRZX91-L	HRZX91-K	HRZX91-N
	180°	6.5mm	6.5mm	180°	180°
Rated voltage	Max. 380V AC 50/60Hz, 250V DC				
Rated current	3A AC / 0.27A DC				
Degree of protection	IP66				
Internal&external earthing	M4/M4				
Ambient temperature	-60℃~+60℃				
Cable entries	1 x M20 x 1. 5				
Available cable outer diameter	DQM-II (Ex d) or DQM-III (Ex d) is recommended. Please see P7/22~31.				

Dimension drawings (all dimensions in mm) - subject to alteration

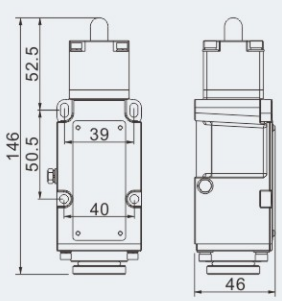

HRZX91-Z

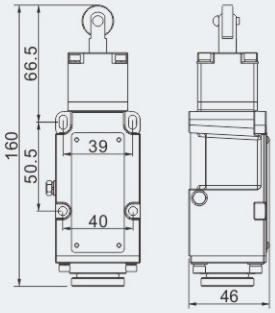

HRZX91-L

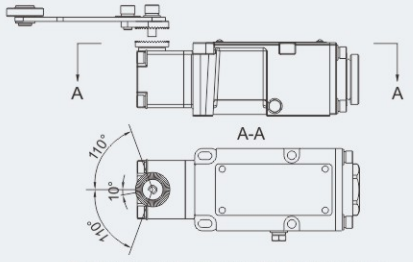

The initial adjustable angle of the rocker arm
(Adjust the angle in multiples of 10°, the maximum adjustment angle is 110° for both left and right side)

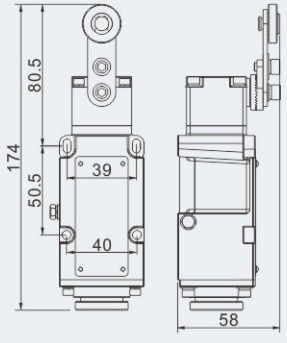

HRZX91-D

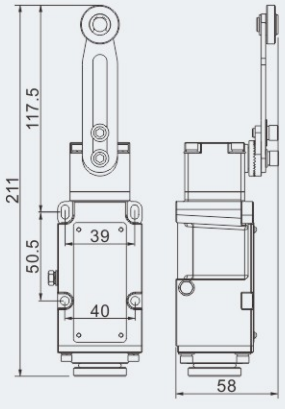

HRZX91-K

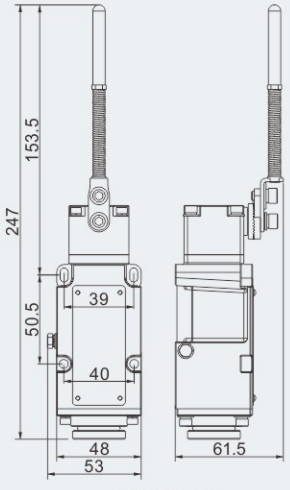

HRZX91-N

Control Stations
BZC Series Explosion-proof Control Stations (Ex db IIB+H2)



- Explosion protection to
  -CENELEC
  -IEC
  -NEC
- Can be used in
  Zone 1 and Zone 2
  Zone 21 and Zone 22
  Class I, Zone 1 and Zone 2
  Class I, Division 1, Groups B, C, D
- Copper-free Aluminium Alloy enclosure, powder coated surface.
- Six types of enclosure .
- Features excellent dustproof, waterproof, and corrosion-resistant properties, making it adaptable to various harsh working environments.
- The layout of buttons, switches, and other components on the control station is rational and straightforward, ensuring ease of use and quick mastery.
- A range of control methods can be selected based on actual needs, such as manual control, automatic control, or remote control, catering to varying application scenarios.

Catalogue number logic

BZC - A □ B □ D □ K □

- Number of control switch
- Control switch (optional)
- Number of indicator
- Indicator (optional)
- Number of ammeter/voltmeter
- Ammeter/Voltmeter (optional)
- Number of push button
- push button (optional)
- Explosion-proof control stations

Note

1. Please refer to the Selection table on P4/7.
2. Please select internal components as below:
   Selection table of HA push button on P4/10~13 (Nominal contact is 1NO+1NC);
   Selection table of HD indicator on P4/14~15;
   Selection table of HK control switch on P4/16~19;
   Selection table of BB8050 explosion-proof ammeter/voltmeter on P4/51~53;
3. Example: BZC-A2B1K1
   Components: Two push buttons, one ammeter, one control switch ;
   Tech. Details: One start push button (40036B + 40023 + 40024, green, 1NO+1NC);
   One stop push button (40036A + 40023 + 40024, red, 1NO+1NC);
   One ammeter (40126, 100/5A);
   One control switch (Function A, stop-run-start);
4. Special requirements on request.

Zones 1&2; 21&22

Selection table of control station BZC (Ex db IIB+H2)

Enclosure type	Components arrangement	Cable entries and direction	Ordering code	Enclosure weight (kg)
I	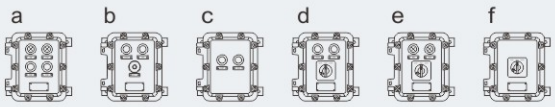	2-M25 x 1.5 Bottom entry	40017.....	8.00
II	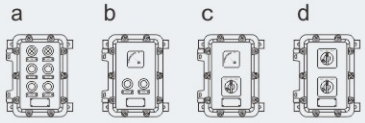	1-M32 x 1.5 or 2-M25 x 1.5 Bottom entry	40018.....	9.10
III	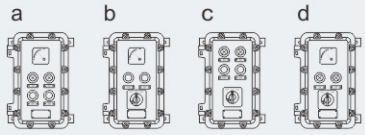	1-M32 x 1.5 or 3-M25 x 1.5 Bottom entry	40019.....	10.20
IV	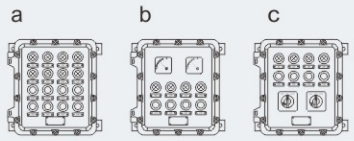 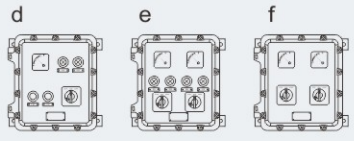	1-M40 x 1.5 or 2-M32 x 1.5 or 4-M25 x 1.5 Bottom entry	40020.....	15.90
V	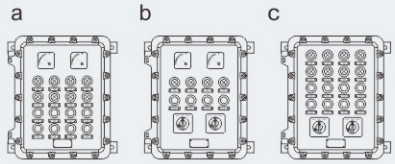	1-M40 x 1.5 or 4-M32 x 1.5 or 6-M25 x 1.5 Bottom entry	40021.....	27.50
VI	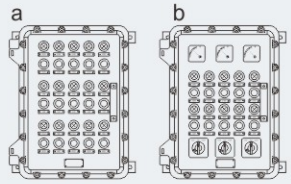	1-M40 x 1.5 or 4-M32 x 1.5 or 6-M25 x 1.5 Bottom entry	40022.....	40.00

Technical data

Explosion-proof control stations BZC (Ex db IIB+H2)

Explosion protection	
Global (IECEx)	IECEx CQM 11.0043
Gas and dust	Ex db IIB+H_2 T6 Gb
	Ex tb IIIC T80℃ Db IP66
Europe (ATEX)	TÜV CY 17 ATEX 0205967X
Gas and dust	Ⓔx II 2 G Ex db IIB+H_2 T6 Gb
	Ⓔx II 2 D Ex tb IIIC T80℃ Db IP66
Certificates	IECEx; ATEX; CU-TR
Conformity to standards	EN 60079-0, EN 60079-1, EN 60079-31
	IEC 60079-0, IEC 60079-1, IEC 60079-31
Enclosure material	Copper-free Aluminium Alloy, powder coated surface
Enclosure colour	Window grey (RAL7040)
Exposed fastener	Stainless steel
Rated voltage	Max. 415V AC
Max. current	10A
Degree of protection	IP66
Internal&external earthing	I, II, III: M6/M6; IV, V, VI : M6/M8;
Ambient temperature	-60℃~+55℃
Components	1. Technical data of HA push button on P4/10~13;
	2. Technical data of HD indicator on P4/14~15;
	3. Technical data of HK control switch on P4/16~19;
	4. Technical data of BB8050 explosion-proof ammeter/voltmeter on P4/51~53;
Cable entries	Standard M□ x 1.5 plug. Please see the Selection table on P4/7
Cable gland (optional)	DQM-II (Ex d) or DQM-III (Ex d) is recommended. Please see P7/22~31.
Mounting	Surface type

Dimension drawings (all dimensions in mm) - subject to alteration

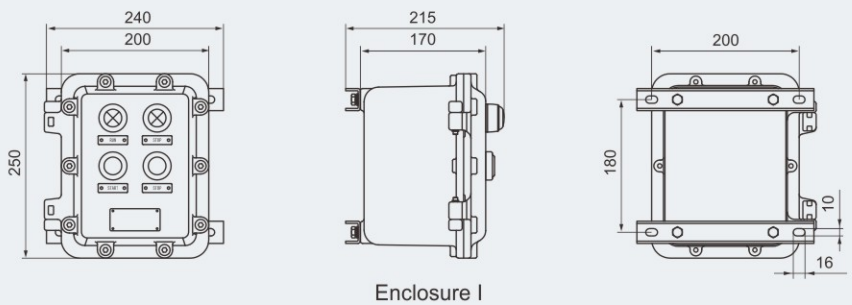

Enclosure I

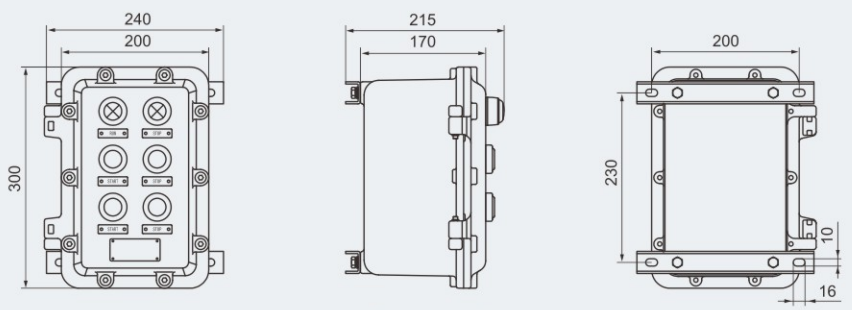

Enclosure II

Dimension drawings (all dimensions in mm) - subject to alteration

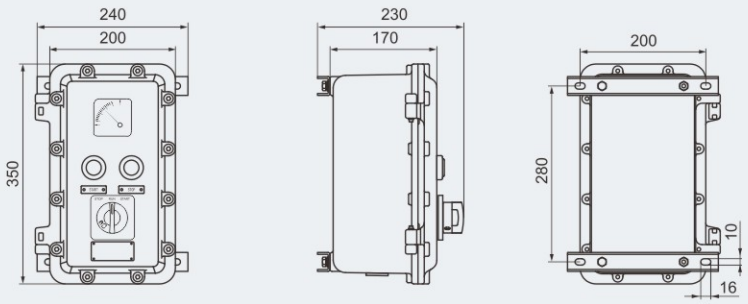

Enclosure III

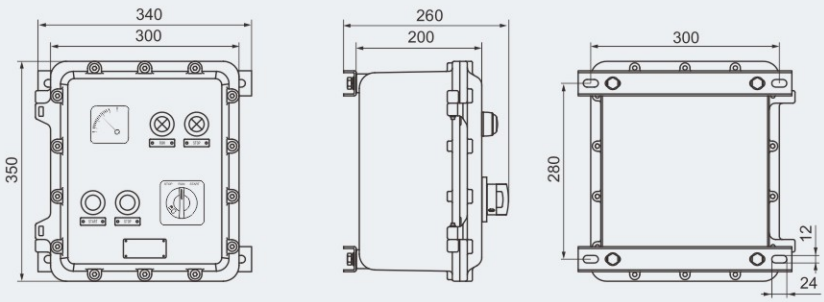

Enclosure IV

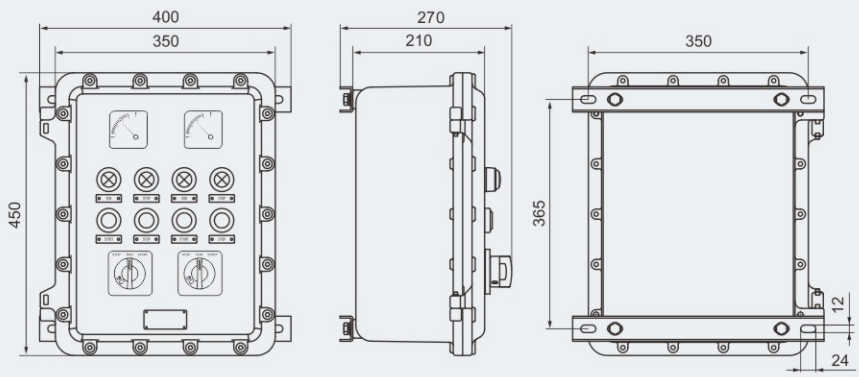

Enclosure V

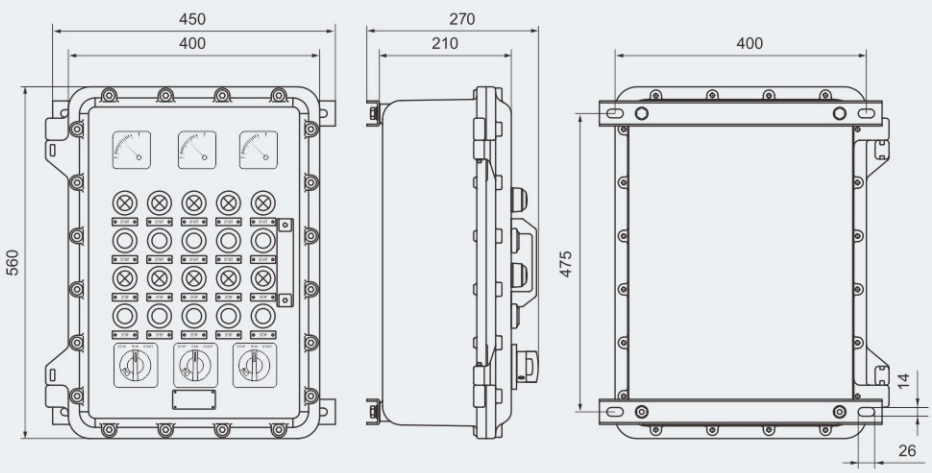

Enclosure VI

Components for BZC Control Stations
HA Flameproof Push Button



- Explosion protection to
  - -CENELEC
  - -IEC
  - -NEC
- Can be used in
  - Zone 1 and Zone 2
  - Zone 21 and Zone 22
  - Class I, Zone 1 and Zone 2
  - Class I, Division 1, Groups A , B, C, D
- Five different ways of operation
  - -Spring-return push button
  - -Key-operated push button
  - -Mushroom stay-put emergency push button
  - -Mushroom turn-to-release emergency push button
  - -Rotary push button
- Mushroom stay-put emergency push button mushroom turn-to-release emergency push button can be equipped with protection cover, please specify when ordering. Material of protection cover: stainless steel and PC, please specify when ordering.

Catalogue number logic

HA (A for short)

A - □ □

- Contact code
- Push button code
- Push buttons

Technical data

HA Flameproof push button

Explosion protection	
Global (IECEx)	IECEx CML 17.0161U
Gas and dust	Ex db IIC Gb Ex tb IIIC Db
Europe (ATEX)	CML 17 ATEX 1289U
Gas and dust	Ⓔx II 2 G Ex db IIC Gb Ⓔx II 2 D Ex tb IIIC Db
Certificates	IECEx; ATEX
Conformity to standards	EN 60079-0, EN 60079-1, EN 60079-31 IEC 60079-0, IEC 60079-1, IEC 60079-31
Rated voltage	660V AC; 440V DC
Rated current	10A (for 660V AC); 6A (for 440V DC)
Degree of protection	IP66
Ambient temperature	-60℃~+70℃

Zones 1&2; 21&22

Components for BZC Control Stations
HA Flameproof Push Button

Selection table

Cover mounting	Specification		Code	Ordering code	Weight (kg)
	Spring-return push button	Red	a	40036A	0.15
		Green	b	40036B	0.15
		Yellow	c	40036C	0.15
		Black	d	40036D	0.15
		Blue	e	40036E	0.15
		White	p	40036F	0.15
	Mushroom stay-put emergency push button	Red	f	40037	0.27
	Mushroom turn-to-release emergency push button	Red	g	40040	0.27
	Self-reset mushroom button	Red	q	40040B	0.27
	Key-operated mushroom emergency push button	Red	h	40040A	0.30
	Rotary push button	Black	i	40039	0.27
	Three-position switch	Black	r	40039A	0.27
	Key-operated push button	Black	j	40038	0.27
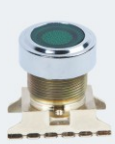	Push button with indicator	Red	k	40057A	0.15
		Green	l	40057B	0.15
		Yellow	m	40057C	0.15
		Blue	n	40057D	0.15
		White	o	40057E	0.15

Components for BZC Control Stations
HA Flameproof Push Button

Selection table of push button contact

Version	Specification	Contact code	Ordering code	Weight (kg)
 Screw type	 1NC	T1	40023	0.03
	 1NO	S1	40024	0.03

Accessories

Description	Material	Ordering code	Weight (kg)
Emergency push button protection cover 	PC	40196	0.03
Emergency push button protection cover 	Stainless steel	40197	0.15
Emergency push button warning plate 	LF2	40198	0.003

Dimension drawings (all dimensions in mm) - subject to alteration

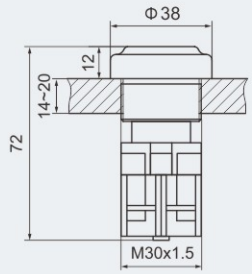

Flameproof Thread

Spring-return push button

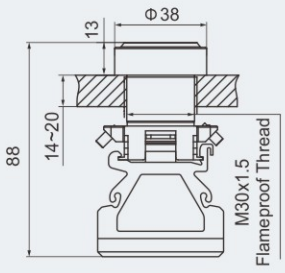

Push button with indicator

Dimension drawings (all dimensions in mm) - subject to alteration

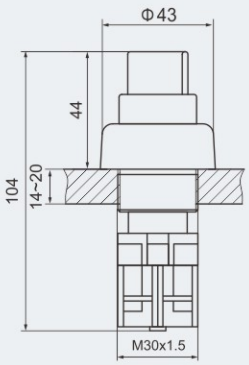

Rotary push button

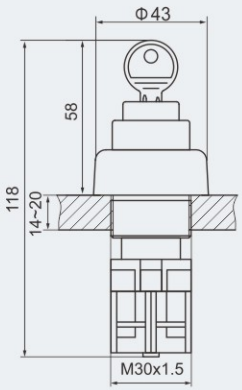

Key-operated push button

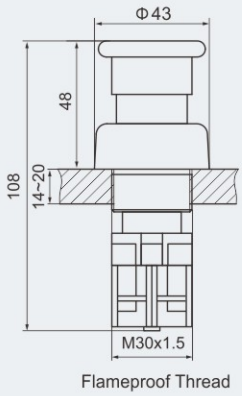

Mushroom stay-put/ turn-to-release emergency push button

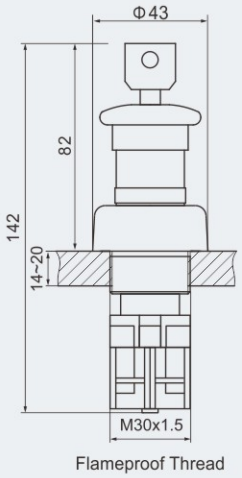

Key-operated mushroom emergency push button

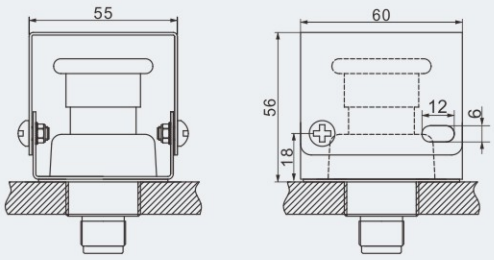

HA Emergency push button with stainless steel protection cover

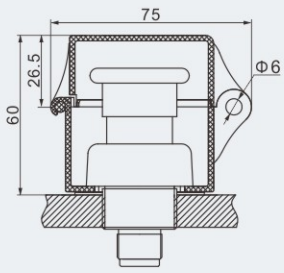

HA Emergency push button with PC protection cover

Components for BZC Control Stations
HD Series Indicators



- Explosion protection to
  - -CENELEC
  - -IEC
  - -NEC
- Can be used in
  - Zone 1 and Zone 2
  - Zone 21 and Zone 22
  - Class I, Zone 1 and Zone 2
  - Class I, Division 1, Groups A , B, C, D
- Available in
  - -red
  - -green
  - -yellow
  - -blue
  - -white
- Two versions
  - -screw connection
  - -2m cable connection

Catalogue number logic

HD(D for short)

D - □ □

- Indicator code
- a: Screw connection (optional)
- b: 2m cable connection
- Indicators

Technical data

Indicator HD-**

Explosion protection	
Global (IECEx)	IECEx CQM 17.0008U
Gas and dust	Ex db IIC Gb
	Ex tb IIIC Db IP66
Europe (ATEX)	EPT 17 ATEX 2649U
Gas and dust	Ⓔx II 2 G Ex db IIC Gb
	Ⓔx II 2 D Ex tb IIIC Db IP66
Certificates	IECEx; ATEX
Conformity to standards	EN 60079-0, EN 60079-1, EN 60079-31
	IEC 60079-0, IEC 60079-1, IEC 60079-31
Rated voltage	440V AC, 50/60Hz; 220~415V AC, 50/60Hz;
	220V DC; 48~120V AC/DC; 12~36V AC/DC
Degree of protection	IP66
Ambient temperature	-60℃~+70℃

Zones 1&2; 21&22

Selection table

Version	Rated voltage	Schematic diagram	Colour	Code	Ordering code	Weight (kg)
a: Screw connection 	220~415V AC	X1 / X2	Red	Ra	40041A	0.10
			Green	Ga	40042A	
			Yellow	Ya	40043A	
			Blue	Ba	40162A	
			White	Wa	40044A	
	220V DC	X1 / X2	Red	Rb	40045A	0.10
			Green	Gb	40046A	
			Yellow	Yb	40047A	
			Blue	Bb	40163A	
			White	Wb	40048A	
	48~120V AC/DC	X1 / X2	Red	Rc	40049A	0.10
			Green	Gc	40050A	
			Yellow	Yc	40051A	
			Blue	Bc	40164A	
			White	Wc	40052A	
	12~36V AC/DC	X1 / X2	Red	Rd	40053A	0.10
			Green	Gd	40054A	
			Yellow	Yd	40055A	
			Blue	Bd	40165A	
			White	Wd	40056A	
b: 2m cable connection 	220~415V AC	X1 / X2	Red	Ra	40041B	0.30
			Green	Ga	40042B	
			Yellow	Ya	40043B	
			Blue	Ba	40162B	
			White	Wa	40044B	
	220V DC	X1 / X2	Red	Rb	40045B	0.30
			Green	Gb	40046B	
			Yellow	Yb	40047B	
			Blue	Bb	40163B	
			White	Wb	40048B	
	48~120V AC/DC	X1 / X2	Red	Rc	40049B	0.30
			Green	Gc	40050B	
			Yellow	Yc	40051B	
			Blue	Bc	40164B	
			White	Wc	40052B	
	12~36V AC/DC	X1 / X2	Red	Rd	40053B	0.30
			Green	Gd	40054B	
			Yellow	Yd	40055B	
			Blue	Bd	40165B	
			White	Wd	40056B	

Dimension drawings (all dimensions in mm) - subject to alteration

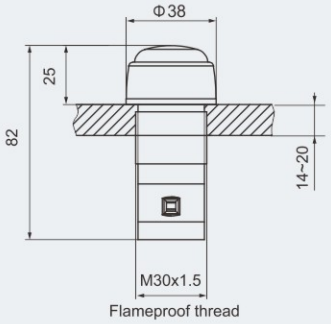

a: Screw connection

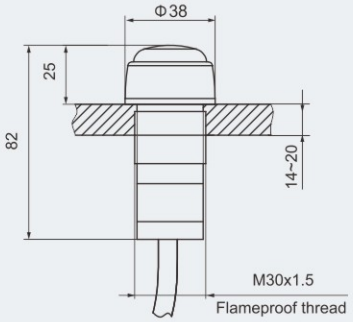

b: 2m cable connection(cable specification: 2x1.5mm^2)

Components for BZC Control Stations
HK Series Control Switches



- Explosion protection to
  - -CENELEC
  - -IEC
  - -NEC
- Can be used in
  - Zone 1 and Zone 2
  - Zone 21 and Zone 22
  - Class I, Zone 1 and Zone 2
  - Class I, Division 1, Groups A , B, C, D
- Available in latching and spring-return forms.
- Different function options.
- Number of pole: 2P, 3P, 4P, 6P.
- The switch shall be fitted inside Ex d enclosure.
- Standard products do not have locks. If you need locks, please specify.
- Standard products can be equipped with locks, locks can be chosen by user.

Catalogue number logic

HK(K for short)

K - □

- □ — Control switch code
- K — Control switches

Technical data

HK Control Switches

Explosion protection	
Global (IECEx)	IECEx CML 17.0166U
Gas and dust	Ex db IIC Gb
	Ex tb IIIC Db
Europe (ATEX)	CML 17 ATEX 1306U
Gas and dust	Ⓔx II 2 G Ex db IIC Gb
	Ⓔx II 2 D Ex tb IIIC Db
Certificates	IECEx; ATEX
Conformity to standards	EN 60079-0, EN 60079-1, EN 60079-31
	IEC 60079-0, IEC 60079-1, IEC 60079-31
Rated voltage	500V AC, 400V DC
Rated current	16A
Degree of protection	IP66
Ambient temperature	-60℃~+70℃

Zones 1&2; 21&22

Selection table

Switch code	Chart of contact	Equivalent switch	Position (solid line: location; dash line: spring return)	Instruction for equivalent function
A	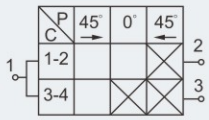	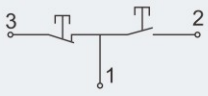	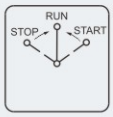	A.Functional wiring is same as double buttons with auto-reset function.
B	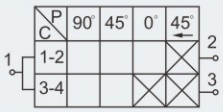	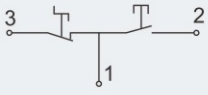	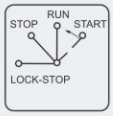	B.Functional wiring is same as double buttons; auto-reset after start; lock-stop gear added to avoid mistake operation.
C	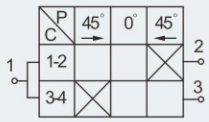	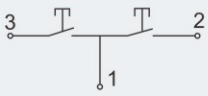	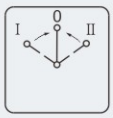	C.Button with 2 NO contacts and available at auto-reset function. Suitable for high-voltage engine control circuit or function panel uses switch code "a".
D	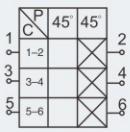		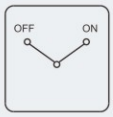	D.Low-power switch.
E	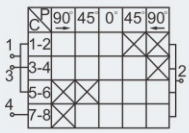	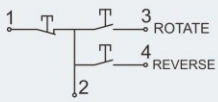	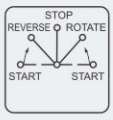	E.Function is same as three buttons; able to control engine in forward and backward rotation. FW&BW starting positions can auto-reset.
F	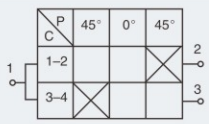	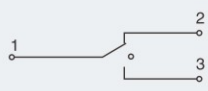	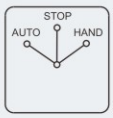	F.Selection switch with stop gear in the intermediate zone.
G	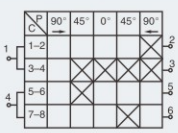	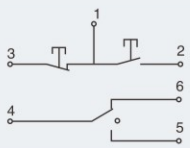	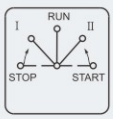	G.Be equal to mounting two buttons and one changeover switch in one axis. Possible to output contact signal or monitoring signal between start and stop.
H	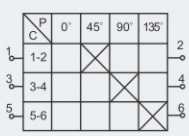	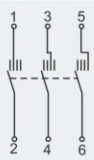	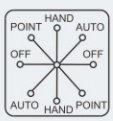	H.Multi-signals transmit gradually.
I	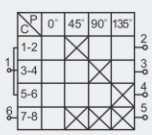	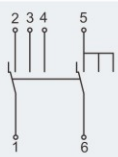	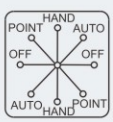	I.Add function of transmitting resultant signal on the base of function panel uses switch code "h".
J	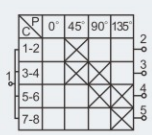	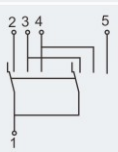	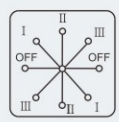	J. Two positions step; change-over gradually.
K	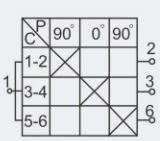		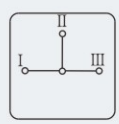	K. Changeover switch.

Components for BZC Control Stations
HK Series Control Switches

Selection table

Switch code	Chart of contact	Equivalent switch	Position (solid line: location; dash line: spring return)	Instruction for equivalent function
L	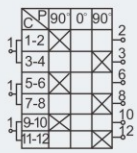	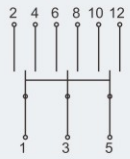	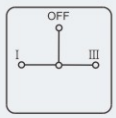	L. Selection switch with three poles and two launches.
M	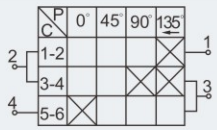	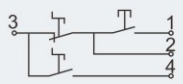	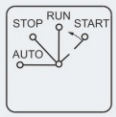	M.Three-position changeover switch among auto, manual and start; auto-reset after start; it can convert to auto gear only after passing stop gear.
N	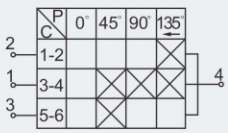	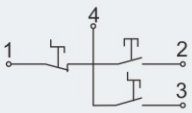	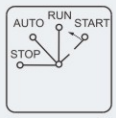	N.Structure is a little different to universal structure of switch code "m"; it directly rotates to auto gear without passing stop gear after starts.
O	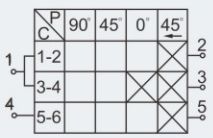	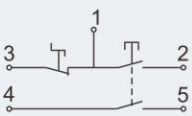	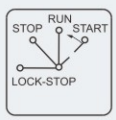	O.Double contacts auto reset for start, with lock-stop gear.
P	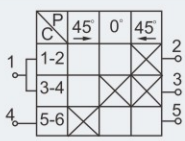	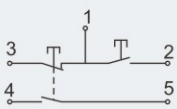	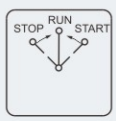	P.Double contacts for stop, to substitute switch code "a" and "c" for start and stop; auto-reset.
Q	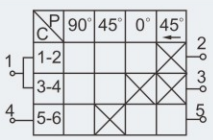	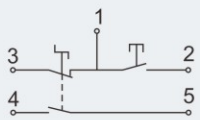	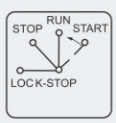	Q.Stop with double contacts, with lock stop gear; auto-reset after start.
R	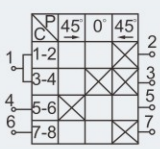	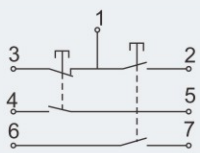	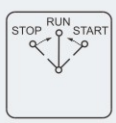	R.Double contacts for both start and stop; it is same as universal panel of switch code “a”, with auto-reset for start and stop.
S	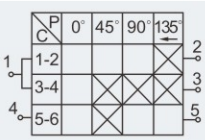	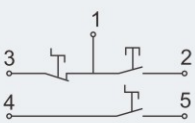	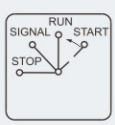	S.Transmit a contact signal before start and stop.
T	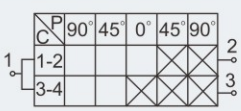	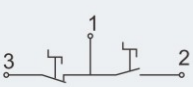	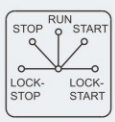	T.With lock-stop gear for start and stop to prevent mistake operation; without auto-reset.
U	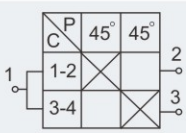	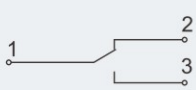	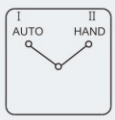	U.Double-control selection switch.
V	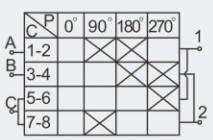	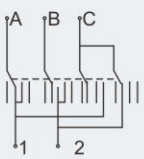	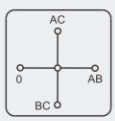	V.Changeover switch for voltage phase-changing and measuring.

Selection table

Switch code	Chart of contact	Equivalent switch	Position (solid line: location; dash line: spring return)	Instruction for equivalent function
W	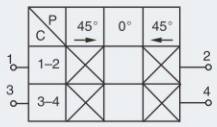	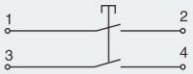	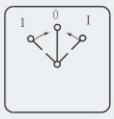	W.One 2NO auto-reset pushbutton, both left and right are the same.
X	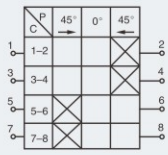	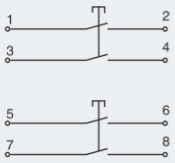	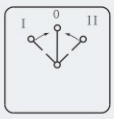	X.Two 2NO auto-reset buttons.
Y	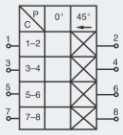	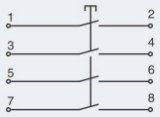	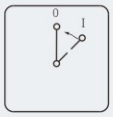	Y. Self-reset button with 4 normally open contacts.
Z	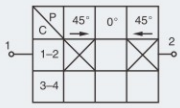		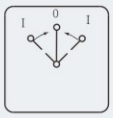	Z. Power supply program switch, disconnected in the middle, close to left and right, can be used as a fire-fighting switch.
a	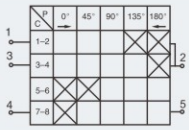	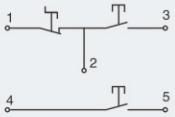	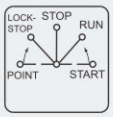	a. Used for starting and inching hybrid circuits.
b	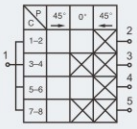	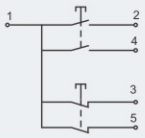	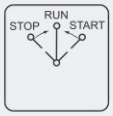	b. Double linkage switch.
e	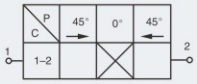		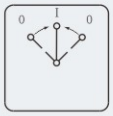	e. Emergency stop switch.
f	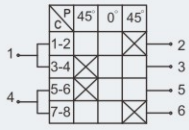	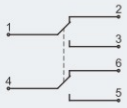	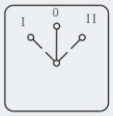	f. 2 normally open and 2 normally closed option switches.

Dimension drawings (all dimensions in mm) - subject to alteration

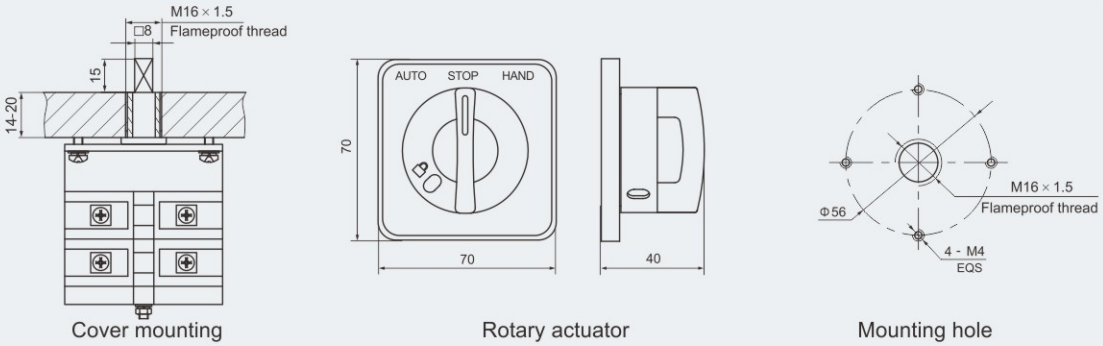

Cover mounting | Rotary actuator | Mounting hole

Control Unit Systems
BZA85 Series Explosion-proof Control Unit Systems



- Explosion protection to
  -CENELEC
  -IEC
  -NEC
- Can be used in
  Zone 1 and Zone 2
  Zone 21 and Zone 22
  Class I, Zone 1 and Zone 2
  Class I, Division 1, Groups A , B, C, D
- Copper-free Aluminium Alloy, powder coated surface.
- Features excellent dustproof, waterproof, and corrosion-resistant properties, making it adaptable to various harsh working environments.
- The layout of button, indicator, and other components on the control station is rational and straightforward, ensuring ease of use and quick mastery.

Catalogue number logic

BZA85 - A □ B □ D □

- Number of indicator
- Indicator (optional)
- Number of ammeter / voltmeter
- Ammeter / Voltmeter (optional)
- Number of pushbutton
- Pushbutton (optional)
- Explosion-proof control unit systems

Note

1. Please refer to the Selection table on P4/21~22.
2. Please select internal components as below:
   Selection table of HA pushbutton on P4/10~13 (nominal contact is 1NO+1NC);
   Selection table of HD indicator on P4/14~15;
   Dimension drawings of ammeter (type 48) and voltmeter (type 48) see P4/23.
3. Example: BZA85-A1
   Components: One control button;
   Tech. Details: One start control button (40036B + 40023 + 40024, green, 1NO+1NC).
4. Special requirements on request.

Zones 1&2; 21&22

Technical data

Explosion-proof control unit systems BZA85

Explosion protection	
Global (IECEx)	IECEx CQM 17.0021X
Gas and dust	Ex db IIC T6 Gb Ex tb IIIC T80℃ Db IP66
Europe (ATEX)	TÜV CY 18 ATEX 0206093 X
Gas and dust	Ⓔx II 2 G Ex db IIC T6 Gb Ⓔx II 2 D Ex tb IIIC T80℃ Db IP66
Certificates	IECEx; ATEX; CU-TR
Conformity to standards	EN 60079-0, EN 60079-1, EN 60079-31 IEC 60079-0, IEC 60079-1, IEC60079-31
Enclosure material	Copper-free Aluminium Alloy, powder coated surface
Enclosure colour	Window grey (RAL7040)
Exposed fastener	Stainless steel
Rated voltage	Max.500V AC, 250V DC (600V for voltmeter)
Rated current	Max.10A (AC), 6A (DC)
Degree of protection	IP66
Ambient temperature	-60℃~+60℃
Components	
HA pushbutton	Technical data on P4/8~11
HD indicator	Technical data on P4/12~13

Ammeter (type 48) / Voltmeter (type 48)

	Working mode	Accuracy	Overload times
Ammeter	Electromagnetic type (moving iron)	Class 1.5	5 times (2 or 6 times on request)
Voltmeter			-

Cable entries	Standard 2 x M25 x 1.5 plugs 2 x NPT3/4" plugs on request
Cable gland (optional)	DQM-II (Ex d) or DQM-III (Ex d) is recommended. Please see P7/22~31.

Selection table (Pushbutton / Indicator)

Outline	Colour	Chart of contact	Ordering code	Weight (kg)
Indicator 	Red	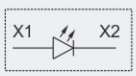	40171A	0.65
	Green		40171B	
Spring-return button 	Red	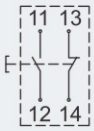	40172A	0.65
	Green		40172B	
Mushroom stay-put emergency pushbutton 	Red	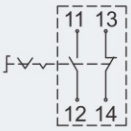	40173	0.7
Mushroom turn-to-release emergency pushbutton 	Red	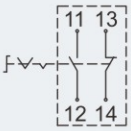	40174	0.7

Selection table (Pushbutton)

Outline	Chart of contact	Ordering code	Weight (kg)
Key-operated pushbutton 	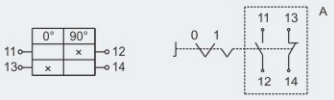 A	40175A	0.7
	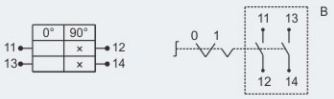 B	40175B	0.7
Rotary button 	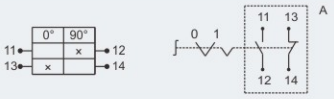 A	40176A	0.7
	 B	40176B	0.7

Selection table (Ammeter)

Version	Description	Overload scale	Measuring range	Ordering code	Weight (kg)
	Direct measuring	-	0~20/40 mA	40177	0.70
			4~20/40 mA	40178	
	Direct measuring	-	0~1 A	40179	
			0~5 A	40180	
	For CT (current transformer)	2 times or 6 times	sec. 1 A	40181	
			sec. 5 A	40182	

Selection table (Voltmeter)

Version	Description	Measuring range	Ordering code	Weight (kg)
	Direct measuring	0~10 V	40183	0.70
		0~25 V	40184	
		0~40 V	40185	
		0~60 V	40186	
		0~100 V	40187	
		0~150 V	40188	
		0~250 V	40189	
		0~300 V	40190	
		0~450 V	40191	
		0~500 V	40192	
	For PT (potential transformer)	sec. 100 V	40193	
		sec. 110 V	40194	
		sec. 120 V	40195	

Dimension drawings (all dimensions in mm) - subject to alteration

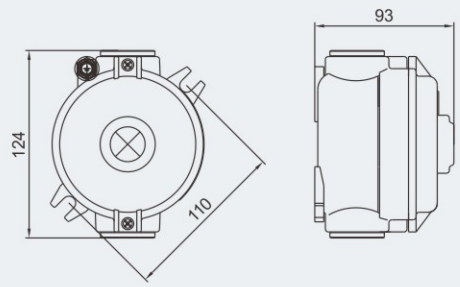

Indicator

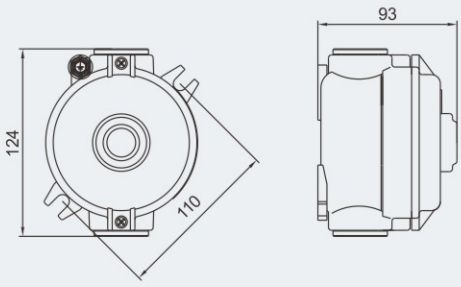

Spring-return button

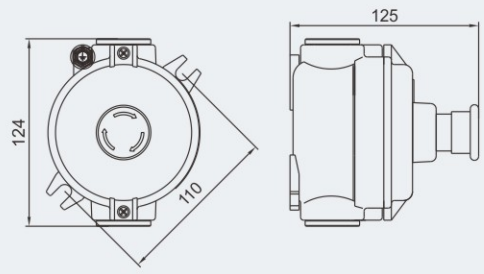

Mushroom turn-to-release
emergency pushbutton

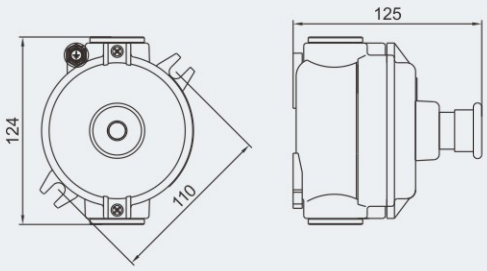

Mushroom stay-put
emergency pushbutton

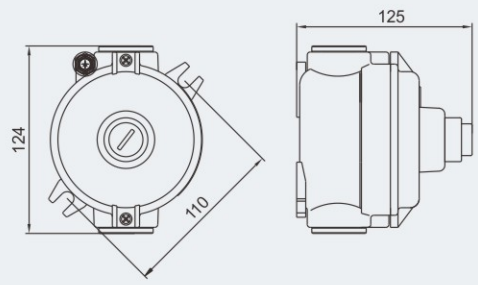

Key-operated pushbutton

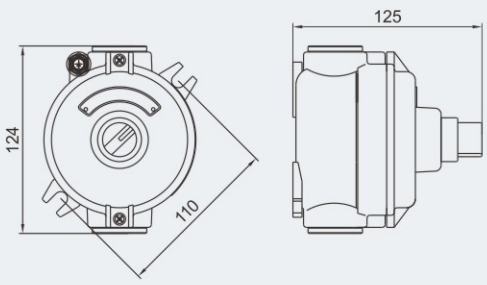

Rotary button

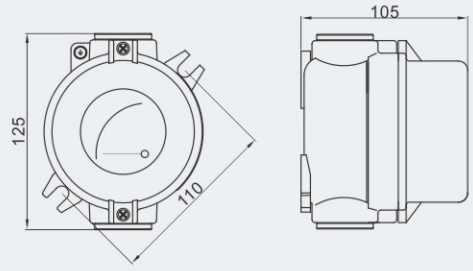

Ammeter / Voltmeter

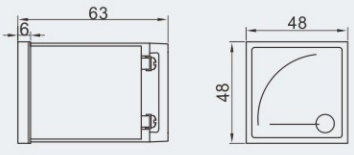

Ammeter (48 type) / Voltmeter (48 type)

Control Stations
BZC8050 Series Control Stations (GRP)

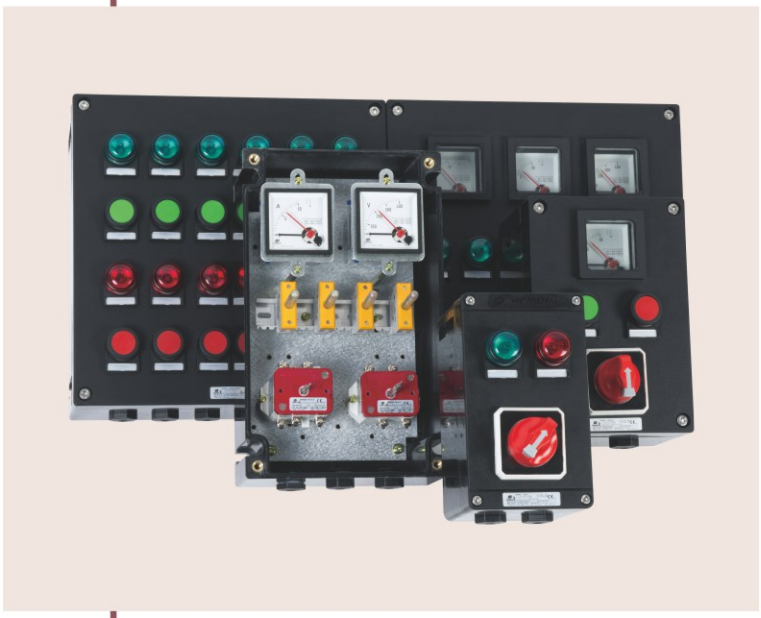

- Explosion protection to
  -CENELEC
  -IEC
  -NEC
- Can be used in
  Zone 1 and Zone 2
  Zone 21 and Zone 22
  Class I, Zone 1 and Zone 2
  Class I, Division 2, Groups A , B, C, D
- GRP (glass fibre-reinforced polyester resin) enclosure.
- Four types of enclosure.
- Features excellent dustproof, waterproof, and corrosion-resistant properties, making it adaptable to various harsh working environments.
- The layout of buttons, switches, and other components on the control station is rational and straightforward, ensuring ease of use and quick mastery.
- A range of control methods can be selected based on actual needs, such as manual control, automatic control, or remote control, catering to varying application scenarios.

Catalogue number logic

BZC 8050 □ - A □ B □ D □ K □ □

- Mounting G: surface type
- Number of control switch
- Control switch (optional)
- Number of indicator
- Indicator (optional)
- Number of ammeter/voltmeter
- Ammeter/Voltmeter (optional)
- Number of control button
- Control button (optional)
- Enclosure material
  - A: Aluminum alloy
  - S: Stainless steel / carbon steel
  - G: GRP
- Design No.
- Control stations

Note

1. Please refer to the Selection table on P4/25.
2. Please select internal components as below:
   Selection table of BA8060 control button on P4/38~41 (nominal contact is 1NO+1NC);
   Selection table of BD8060 indicator on P4/42~44;
   Selection table of BK8050 control switch on P4/45~50;
   Selection table of BB8050 explosion-proof ammeter/voltmeter on P4/51~53;
3. Example: BZC8050-A2D2G
   Components: Two control buttons, two indicators; surface type
   Tech. Details: One start control button (40092B + 40090-1+40090-2, green, 1NO+1NC);
   One stop control button (40092A+ 40090-1+40090-2, red, 1NO+1NC);
   One indicator (40116B+40100B, green, 230V AC);
   One indicator (40115B+40099B, red, 230V AC);
4. Special requirements on request.

Zones 1&2; 21&22

Selection table of control station BZC8050(GRP)(Without terminal)

Enclosure type	Components arrangement	Cable entries and direction	Ordering code	Enclosure weight (kg)
I	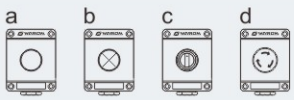	1-M25 x 1.5 Bottom entry	40074.....	0.65
II	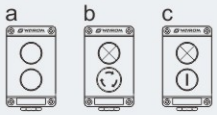	1-M25 x 1.5 Bottom entry	40075.....	0.85
III	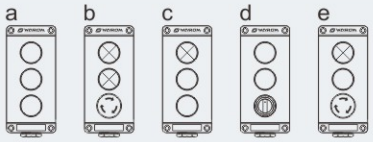	1-M25 x 1.5 Bottom entry	40076.....	1.10
IV	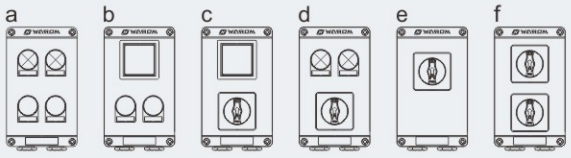	2-M25 x 1.5 Bottom entry	40077.....	1.30
V	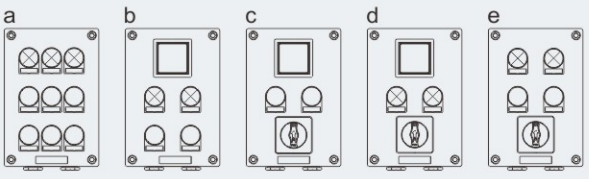	1-M32 x 1.5 or 2-M25 x 1.5 Bottom entry	40078.....	2.10
VI	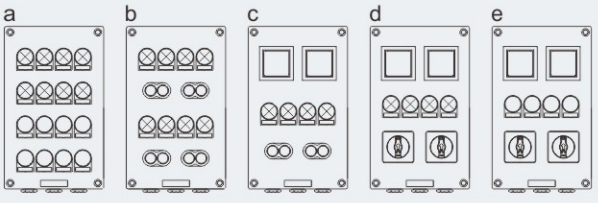	1-M32 x 1.5 or 3-M25 x 1.5 Bottom entry	40078.....	3.25
VII	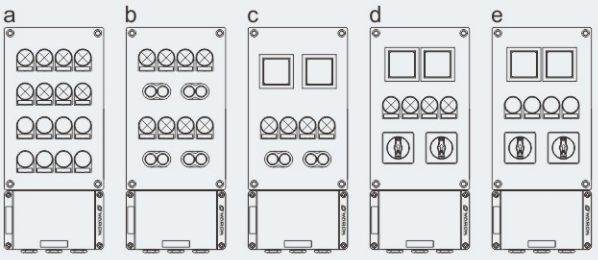	1-M32 x 1.5 or 3-M25 x 1.5 Bottom entry	40078.....	4.60
VIII	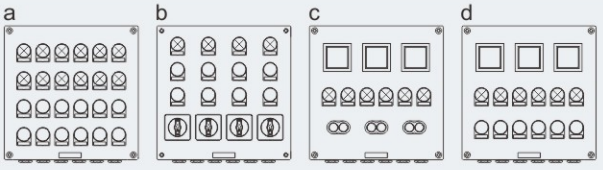	1-M40 x 1.5 or 2-M32 x1.5 or 6-M25 x 1.5 Bottom entry	40078.....	4.15
IX	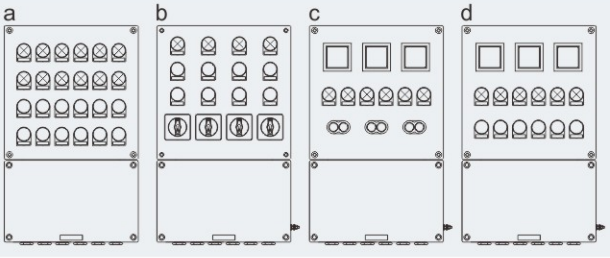	1-M40 x 1.5 or 2-M32 x1.5 or 6-M25 x 1.5 Bottom entry	40078.....	7.30

Technical data

Control stations BZC8050 (GRP)

Explosion protection	
Global (IECEx)	IECEx CQM 24.0057X
Gas and dust	Ex db eb mb IIC T6/T5 Gb[1)] Ex db eb IIC T6/T5 Gb[1)] Ex tb IIIC T80℃ Db[1)]
Europe (ATEX)	TUV CY 25 ATEX 0207269X
Gas and dust	Ⓔx II 2 G Ex db eb mb IIC T6/T5 Gb[1)] Ⓔx II 2 G Ex db eb IIC T6/T5 Gb[1)] Ⓔx II 2 D Ex tb IIIC T80℃ Db[1)]
	[1)]See Selection table.
Certificates	IECEx; ATEX; CU-TR
Conformity to standards	EN 60079-0, EN 60079-1, EN 60079-7, EN 60079-18, EN 60079-31 IEC 60079-0, IEC 60079-1, IEC 60079-7, IEC 60079-18, IEC 60079-31
Enclosure material	GRP (glass fibre-reinforced polyester resin)
Enclosure colour	Black
Exposed fastener	Stainless steel
Degree of protection	IP66
Ambient temperature	-60℃(-40℃)~+55℃(+40℃)
Components	1. Technical data of BA8060 control button on P4/38~41 2. Technical data of BD8060 indicator on P4/42~44 3. Technical data of BK8050 control switch on P4/45~50 4. Technical data of BB8050 explosion-proof ammeter/voltmeter on P4/51~53
Cable entries	M□ x 1.5 plug, please see the Selection table on P4/25
Cable gland (optional)	DQM-I (Ex e) is recommended. Please see P7/18
Mounting	Surface type
Note	Please specify the number and size of entries (applicable for surface type only)

Selection table (Ex markings and ratings)

Rated operating voltage (V)	Rated operating current (A)	Ex-mark	
		-60℃(-40℃)~+40℃	-60℃(-40℃)~+55℃
Max. 500V AC Max. 220V DC	Max. 16A (only with BK8050)	Ex db eb IIC T6 Gb Ex db eb mb IIC T6 Gb Ex tb IIIC T80℃ Db	Ex db eb IIC T6/T5 Gb Ex db eb mb IIC T6/T5 Gb Ex tb IIIC T80℃ Db
Max. 440V AC Max. 220V DC	Max. 10A		

Note: When the ambient temperature is -60℃(-40℃) to +55℃ and falls within the T6 temperature class, the maximum configuration is as follows: BZC8050-□-D3, BZC8050-□-A3, BZC8050-□-B1K1, BZC8050-□-A2D2, BZC8050-□-A2B1.

Note: Protection type “mb” depends on the use of certified Ex component, the voltmeter. When the seal strip is made of polyurethane (PU) material, the ambient temperature is -40℃~+40℃ (+55℃); when the seal strip is made of silicone rubber, the ambient temperature is -60℃~+40℃(+55℃).

Dimension drawings (all dimensions in mm) - subject to alteration

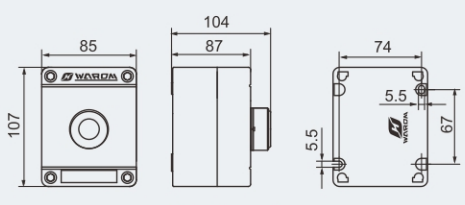

Enclosure I

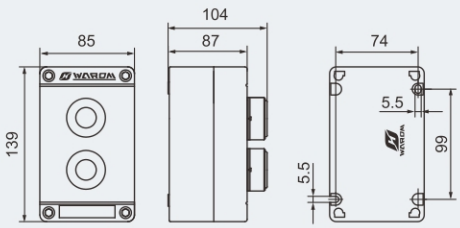

Enclosure II

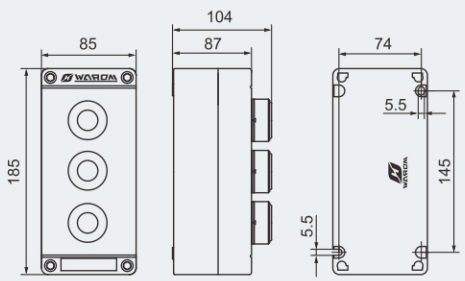

Enclosure III

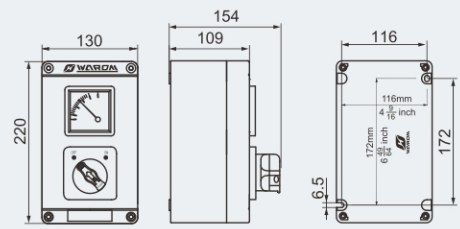

Enclosure IV

Dimension drawings (all dimensions in mm) - subject to alteration

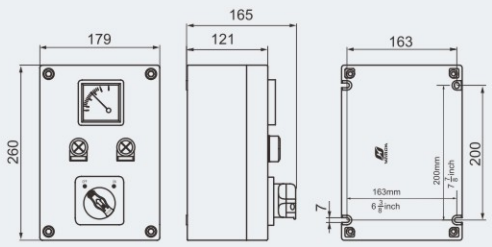

Enclosure V

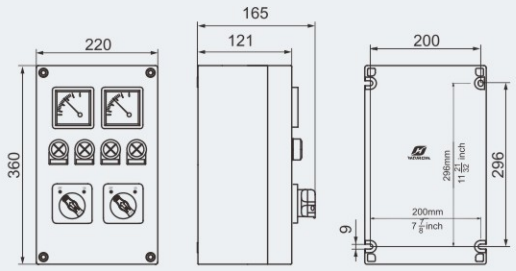

Enclosure VI

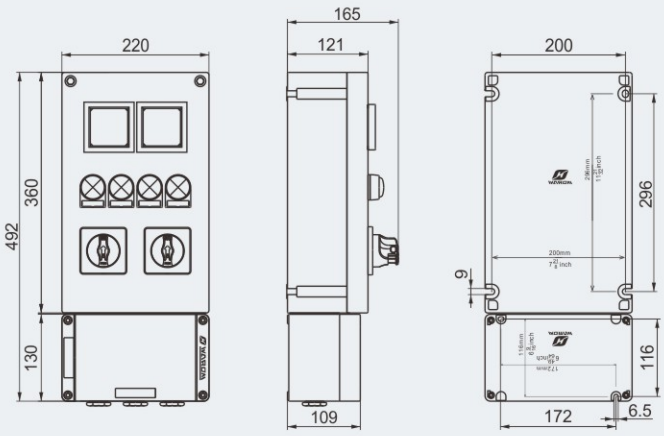

Enclosure VII

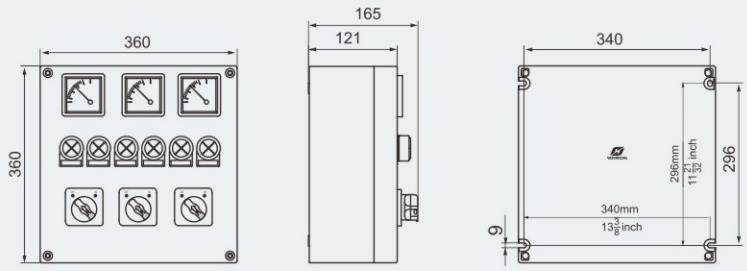

Enclosure VIII

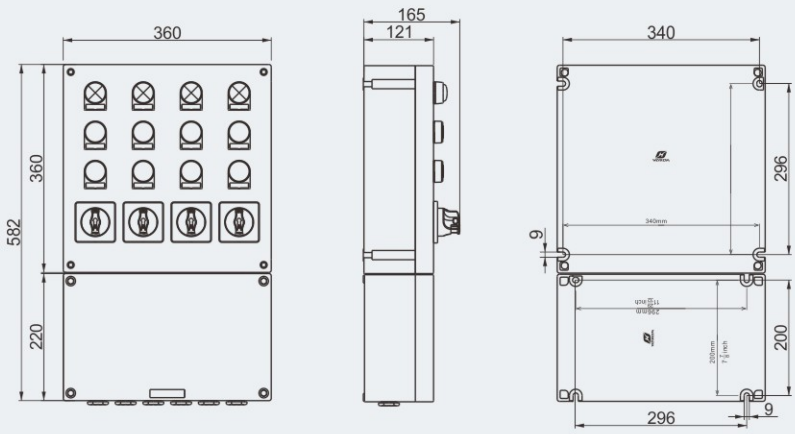

Enclosure IX

Control Stations

BZC8050 Series Control Stations (Copper-free Aluminium Alloy)

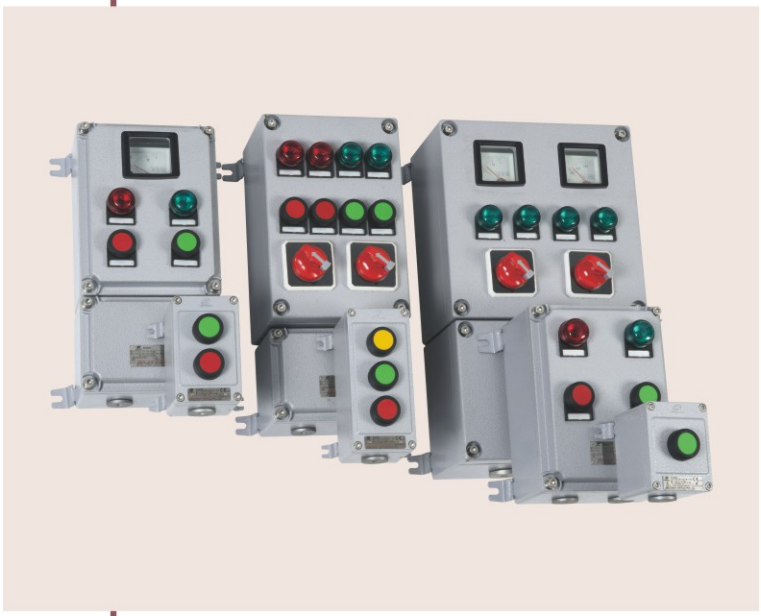

- Explosion protection to
  -CENELEC
  -IEC
  -NEC
- Can be used in
  Zone 1 and Zone 2
  Zone 21 and Zone 22
  Class I, Zone 1 and Zone 2
  Class I, Division 2, Groups A , B, C, D
- Copper-free Aluminium Alloy enclosure, powder coated surface.
- Seven types of enclosure.
- Features excellent dustproof, waterproof, and corrosion-resistant properties, making it adaptable to various harsh working environments.
- The layout of buttons, switches, and other components on the control station is rational and straightforward, ensuring ease of use and quick mastery.
- A range of control methods can be selected based on actual needs, such as manual control, automatic control, or remote control, catering to varying application scenarios.

Catalogue number logic

BZC 8050 □ - A □ B □ D □ K □ □

- Mounting G: surface type
- Number of control switch
- Control switch (optional)
- Number of indicator
- Indicator (optional)
- Number of ammeter/voltmeter
- Ammeter/Voltmeter (optional)
- Number of control button
- Control button (optional)
- Enclosure material
  - A: Aluminum alloy
  - S: Stainless steel / carbon steel
  - G: GRP
- Design No.
- Control stations

Note

1. Please refer to the Selection table on P4/29.
2. Please select internal components as below:
   Selection table of BA8060 control button on P4/38~41 (Nominal contact is 1NO+1NC);
   Selection table of BD8060 indicator on P4/42~44;
   Selection table of BK8050 control switch on P4/45~50;
   Selection table of BB8050 explosion-proof ammeter/voltmeter on P4/51~53;
3. Example: BZC8050-A2D2G
   Components: Two control buttons, two indicators; surface type
   Tech. Details: One control start button (40092B + 40090-1+40090-2, green, 1NO+1NC);
   One control stop button (40092A+ 40090-1+40090-2, red, 1NO+1NC);
   One indicator (40116B+40100B, green, 230V AC);
   One indicator (40115B+40099B, red, 230V AC);
4. Special requirements on request.

Zones 1&2; 21&22

Selection table of control station BZC8050 (aluminium alloy)

Enclosure type	Components arrangement	Cable entries and direction	Ordering code	Enclosure weight (kg)
I	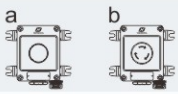	1-M25 x 1.5 Bottom entry	40079.....	0.65
II		1-M25 x 1.5 Bottom entry	40080	0.85
III	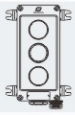	1-M25 x 1.5 Bottom entry	40081	1.10
IV	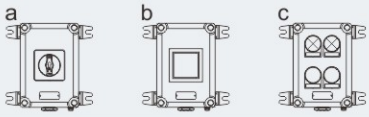	1-M25 x 1.5 Bottom entry	40082.....	2.80
V	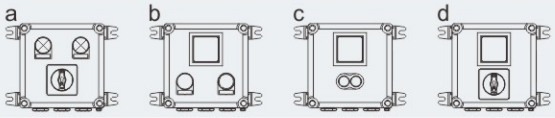	1-M32 x 1.5 or 2-M25 x 1.5 Bottom entry	40083.....	3.75
VI	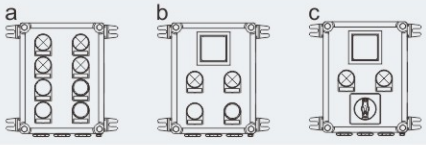	1-M32 x 1.5 or 2-M25 x 1.5 Bottom entry	40084.....	5.00
VII	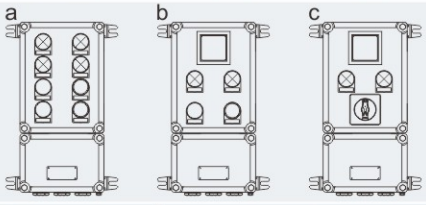	1-M32 x 1.5 or 3-M25 x 1.5 Bottom entry	40085.....	6.50
VIII	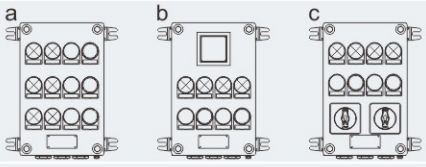	1-M32 x 1.5 or 3-M25 x 1.5 Bottom entry	40085.....	7.50
IX	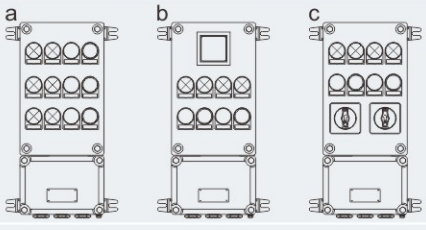	1-M32 x 1.5 or 3-M25 x 1.5 Bottom entry	40085.....	9.00
X	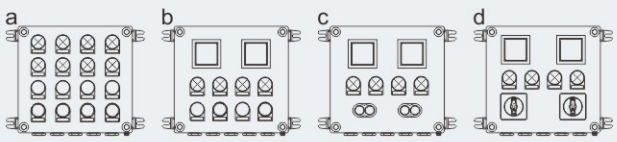	2-M32 x 1.5 or 5-M25 x 1.5 Bottom entry	40084.....	9.20
XI	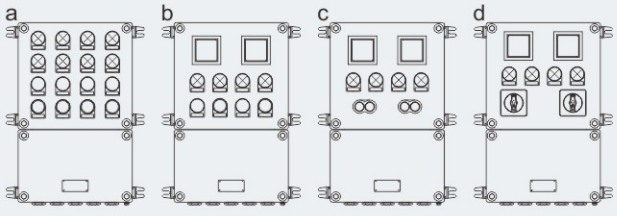	1-M40 x 1.5 or 2-M32 x1.5 or 6-M25 x 1.5 Bottom entry	40085.....	13.70

Technical data

Control stations BZC8050 (aluminium alloy)

Explosion protection	
Global (IECEx)	IECEx CQM 24.0057X
Gas and dust	Ex db eb mb IIC T6/T5 Gb[1)] Ex db eb IIC T6/T5 Gb[1)] Ex tb IIIC T80℃ Db[1)]
Europe (ATEX)	TUV CY 25 ATEX 0207269X
Gas and dust	Ⓔx II 2 G Ex db eb mb IIC T6/T5 Gb[1)] Ⓔx II 2 G Ex db eb IIC T6/T5 Gb[1)] Ⓔx II 2 D Ex tb IIIC T80℃ Db[1)]
	[1)]See Selection table.
Certificates	IECEx; ATEX; CU-TR
Conformity to standards	EN 60079-0, EN 60079-1, EN 60079-7, EN 60079-18, EN 60079-31 IEC 60079-0, IEC 60079-1, IEC 60079-7, IEC 60079-18, IEC 60079-31
Enclosure material	Copper-free Aluminium Alloy, powder coated surface
Enclosure colour	Window grey (RAL7040)
Exposed fastener	Stainless steel
Degree of protection	IP66
Ambient temperature	-60℃(-40℃)~+55℃(+40℃)
Components	1. Technical data of BA8060 control button on P4/38~41 2. Technical data of BD8060 indicator on P4/42~44 3. Technical data of BK8050 control switch on P4/45~50 4. Technical data of BB8050 explosion-proof ammeter/voltmeter on P4/51~53
Cable entries	M□ x 1.5 plug, please see the Selection table on P4/29
Cable gland (optional)	DQM-I (Ex e) is recommended. Please see P7/18
Mounting	Surface type
Note	Please specify the number and size of entries (applicable for surface type only)

Selection table (Ex markings and ratings)

Rated operating voltage (V)	Rated operating current (A)	Ex-mark	
		-60℃(-40℃)~+40℃	-60℃(-40℃)~+55℃
Max. 500V AC Max. 220V DC	Max. 16A (only with BK8050)	Ex db eb IIC T6 Gb Ex db eb mb IIC T6 Gb Ex tb IIIC T80℃ Db	Ex db eb IIC T6/T5 Gb Ex db eb mb IIC T6/T5 Gb Ex tb IIIC T80℃ Db
Max. 440V AC Max. 220V DC	Max. 10A		

Note: When the ambient temperature is -60℃(-40℃) to +55℃ and falls within the T6 temperature class, the maximum configuration is as follows: BZC8050-□-D3, BZC8050-□-A3, BZC8050-□-B1K1, BZC8050-□-A2D2, BZC8050-□-A2B1.

Note: Protection type “mb” depends on the use of certified Ex component, the voltmeter. When the seal strip is made of polyurethane (PU) material, the ambient temperature is -40℃~+40℃ (+55℃); when the seal strip is made of silicone rubber, the ambient temperature is -60℃~+40℃(+55℃).

Dimension drawings (all dimensions in mm) - subject to alteration

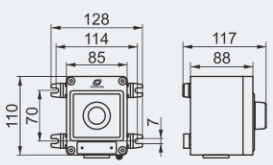

Enclosure I

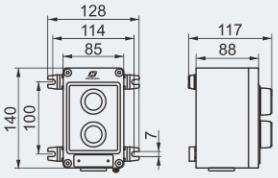

Enclosure II

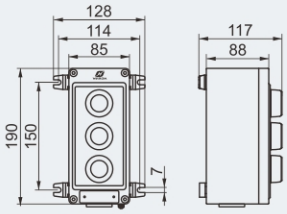

Enclosure III

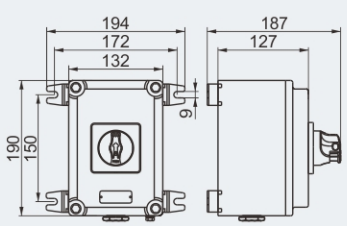

Enclosure IV

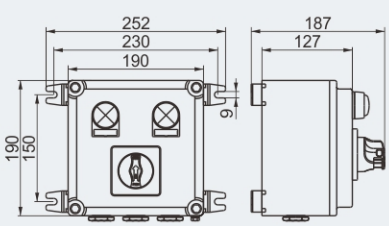

Enclosure V

Dimension drawings (all dimensions in mm) - subject to alteration

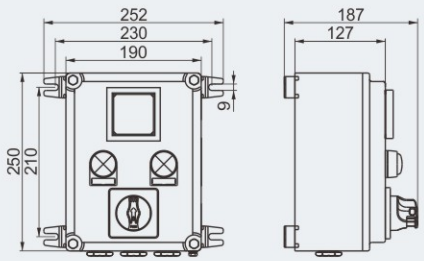

Enclosure VI

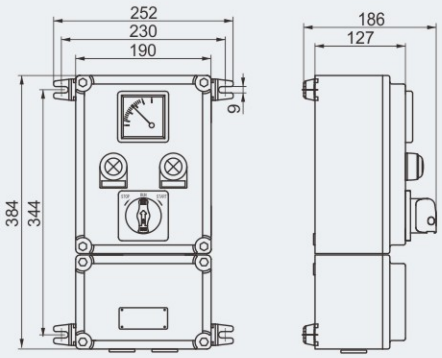

Enclosure VII

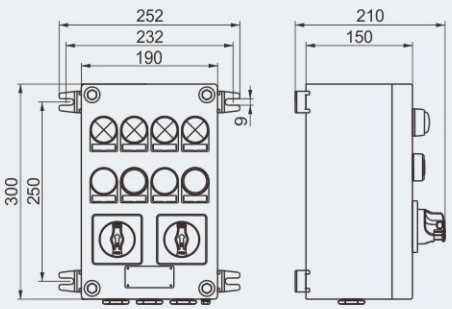

Enclosure VIII

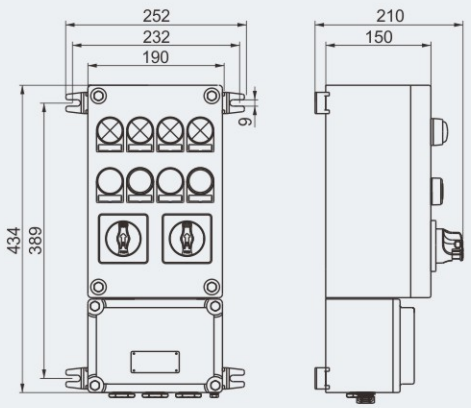

Enclosure IX

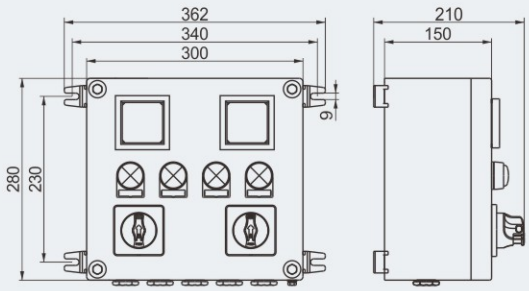

Enclosure X

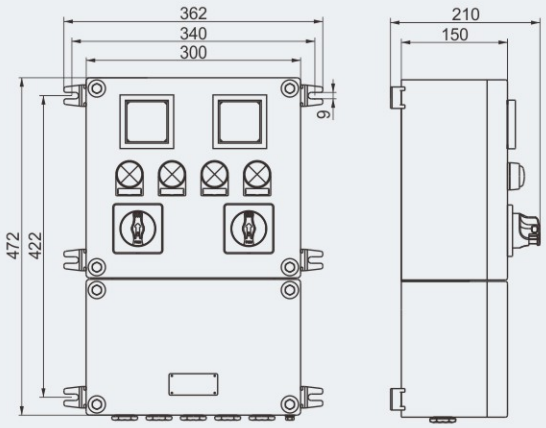

Enclosure XI

Control Stations

BZC8050 Series Control Stations (Stainless Steel)

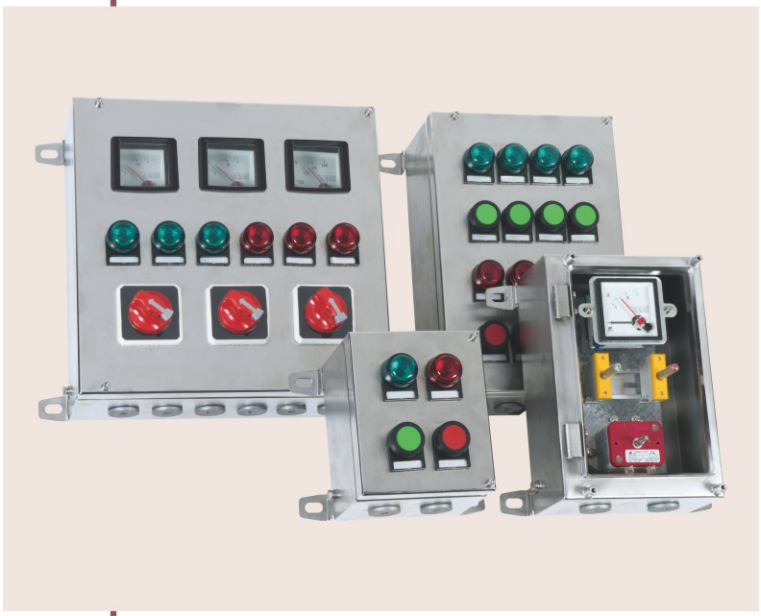

- Explosion protection to
  -CENELEC
  -IEC
  -NEC
- Can be used in
  Zone 1 and Zone 2
  Zone 21 and Zone 22
  Class I, Zone 1 and Zone 2
  Class I, Division 2, Groups A , B, C, D
- Stainless steel enclosure.
- Five types of enclosure.
- Features excellent dustproof, waterproof, and corrosion-resistant properties, making it adaptable to various harsh working environments.
- The layout of buttons, switches, and other components on the control station is rational and straightforward, ensuring ease of use and quick mastery.
- A range of control methods can be selected based on actual needs, such as manual control, automatic control, or remote control, catering to varying application scenarios.

Catalogue number logic

BZC 8050 □ - A □ B □ D □ K □ □

- Mounting G: surface type
- Number of control switch
- Control switch (optional)
- Number of indicator
- Indicator (optional)
- Number of ammeter/voltmeter
- Ammeter/Voltmeter (optional)
- Number of control button
- Control button (optional)
- Enclosure material
  - A: Aluminum alloy
  - S: Stainless steel / carbon steel
  - G: GRP
- Design No.
- Control stations

Note

1. Please refer to the Selection table on P4/33.
2. Please select internal components as below:
   Selection table of BA8060 control button on P4/38~41 (Nominal contact is 1NO+1NC);
   Selection table of BD8060 indicator on P4/42~44;
   Selection table of BK8050 control switch on P4/45~50;
   Selection table of BB8050 explosion-proof ammeter/voltmeter on P4/51~53;
3. Example: BZC8050-A2D2G
   Components: Two control buttons, two indicators; surface type
   Tech. Details: One control start button (40092B + 40090-1+40090-2, green, 1NO+1NC);
   One control stop button (40092A+ 40090-1+40090-2, red, 1NO+1NC);
   One indicator (40116B+40100B, green, 230V AC);
   One indicator (40115B+40099B, red, 230V AC);
4. Special requirements on request.

Zones 1&2; 21&22

Selection table of control station BZC8050 (stainless steel)(Without terminal)

Enclosure type	Components arrangement	Cable entries and direction	Ordering code	Enclosure weight (kg)
I	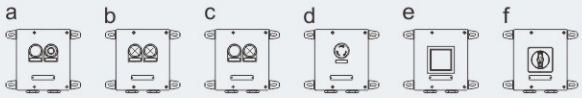	2-M25 x 1.5 Bottom entry	40086.....	2.80
II	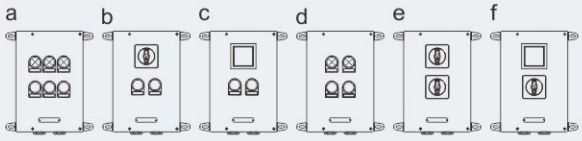	1-M32 x 1.5 or 2-M25 x 1.5 Bottom entry	40087.....	4.50
III	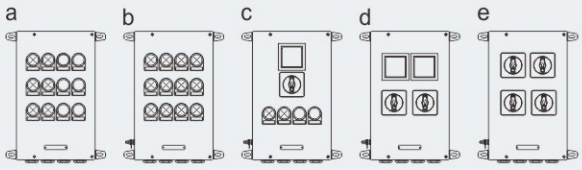	1-M40 x 1.5 or 2-M32 x 1.5 or 4-M25 x 1.5 Bottom entry	40088.....	6.75
IV	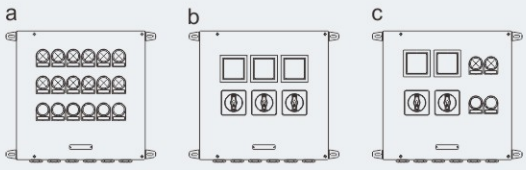	1-M40 x 1.5 or 2-M32 x 1.5 or 6-M25 x 1.5 Bottom entry	40089.....	10.25
V	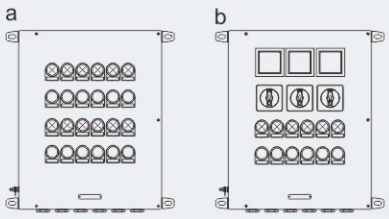	1-M50 x 1.5 or 2-M40 x 1.5 or 6-M32 x 1.5 Bottom entry	40090.....	13.50
VI	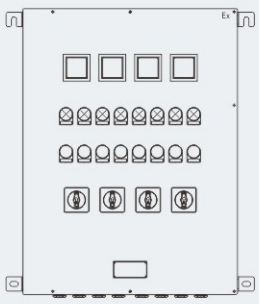	1-M50 x 1.5 or 2-M40 x 1.5 or 8-M32 x 1.5 Bottom entry	40090.....	22.00

Technical data

Control stations BZC8050 (stainless steel)

Explosion protection	
Global (IECEx)	IECEx CQM 24.0057X
Gas and dust	Ex db eb mb IIC T6/T5 Gb[1)]
	Ex db eb IIC T6/T5 Gb[1)]
	Ex tb IIIC T80℃ Db[1)]
Europe (ATEX)	TUV CY 25 ATEX 0207269X
Gas and dust	Ⓔx II 2 G Ex db eb mb IIC T6/T5 Gb[1)]
	Ⓔx II 2 G Ex db eb IIC T6/T5 Gb[1)]
	Ⓔx II 2 D Ex tb IIIC T80℃ Db[1)]
	[1)]See Selection table.
Certificates	IECEx; ATEX; CU-TR
Conformity to standards	EN 60079-0, EN 60079-1, EN 60079-7, EN 60079-18, EN 60079-31
	IEC 60079-0, IEC 60079-1, IEC 60079-7, IEC 60079-18, IEC 60079-31
Enclosure material	Stainless steel
Enclosure colour	Metal colour
Exposed fastener	Stainless steel
Degree of protection	IP66
Ambient temperature	-60℃(-40℃)~+55℃(+40℃)
Components	1. Technical data of BA8060 control button on P4/38~41
	2. Technical data of BD8060 indicator on P4/42~44
	3. Technical data of BK8050 control switch on P4/45~50
	4. Technical data of BB8050 explosion-proof ammeter/voltmeter on P4/51~53
Cable entries	M□ x 1.5 plug, please see the Selection table on P4/33
Cable gland (optional)	DQM-I (Ex e) is recommended. Please see P7/18
Mounting	Surface type
Note	Please specify the number and size of entries (applicable for surface type only)

Selection table (Ex markings and ratings)

Rated operating voltage (V)	Rated operating current (A)	Ex-mark	
		-60℃(-40℃)~+40℃	-60℃(-40℃)~+55℃
Max. 500V AC Max. 220V DC	Max. 16A (only with BK8050)	Ex db eb IIC T6 Gb Ex db eb mb IIC T6 Gb Ex tb IIIC T80℃ Db	Ex db eb IIC T6/T5 Gb Ex db eb mb IIC T6/T5 Gb Ex tb IIIC T80℃ Db
Max. 440V AC Max. 220V DC	Max. 10A		

Note: When the ambient temperature is -60℃(-40℃) to +55℃ and falls within the T6 temperature class, the maximum configuration is as follows: BZC8050-□-D3, BZC8050-□-A3, BZC8050-□-B1K1, BZC8050-□-A2D2, BZC8050-□-A2B1.

Note: Protection type “mb” depends on the use of certified Ex component, the voltmeter. When the seal strip is made of polyurethane (PU) material, the ambient temperature is -40℃~+40℃ (+55℃); when the seal strip is made of silicone rubber, the ambient temperature is -60℃~+40℃(+55℃).

Dimension drawings (all dimensions in mm) - subject to alteration

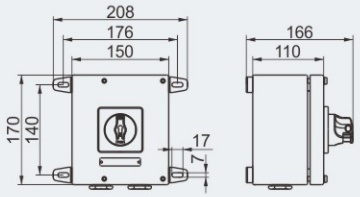

Enclosure I

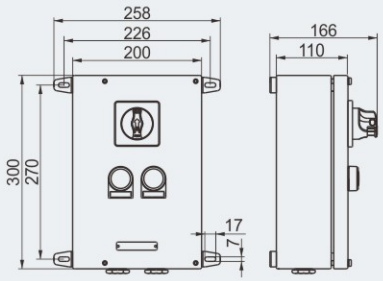

Enclosure II

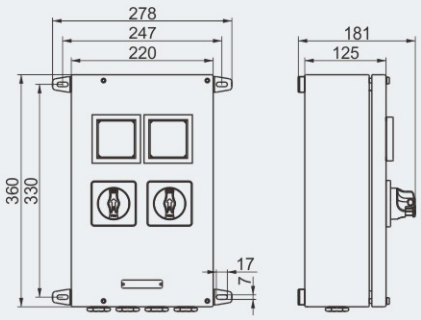

Enclosure III

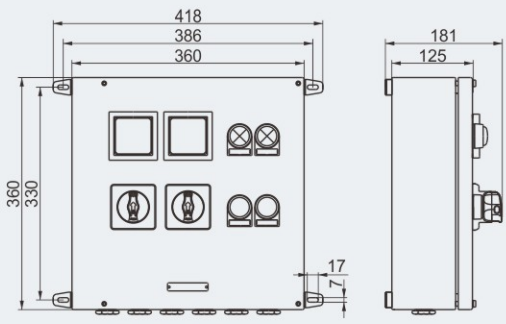

Enclosure IV

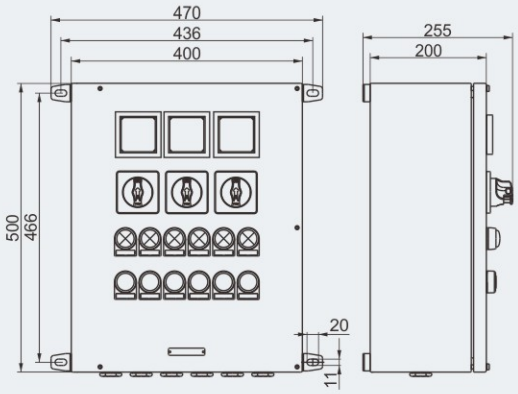

Enclosure V

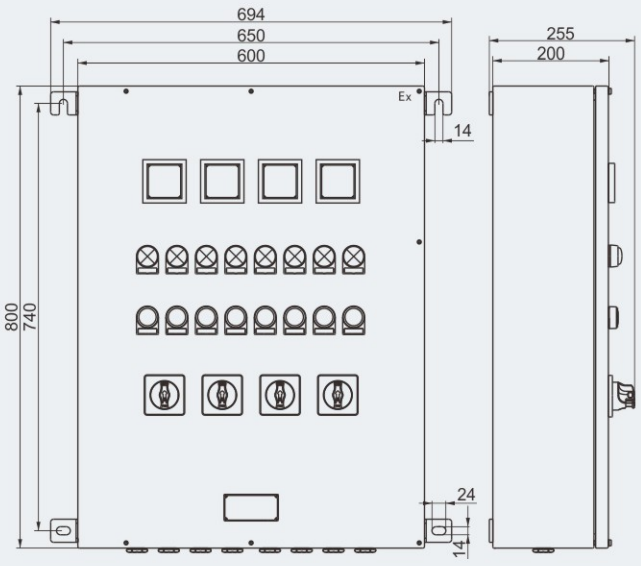

Enclosure VI

Control Stations
BZC-HMI Series Explosion-proof Touchscreen



- Explosion protection to
  -CENELEC
  -IEC
  -NEC
- Can be used in
  Zone 2
  Zone 21 and Zone 22
  Class I, Zone 2
  Class I, Division 2, Groups A , B, C, D
- Stainless steel enclosure.
- Three types of enclosure.
- The explosion-proof touchscreen is a human-machine interaction device specifically designed for hazardous locations.
- With high-definition display capabilities, it makes images and text clearly visible, allowing operators to accurately gather information.
- Featuring rapid response and high touch precision, it offers a smooth operation experience, enhancing work efficiency.
- It supports various interface types, facilitating connection and integration with other devices, achieving inter-connectivity of systems.

Catalogue number logic

BZC-HMI / □

- Screen Size
  - 7: 7.0 inches
  - 9: 9.0 inches
  - 12: 12.1 inches
- Explosion-proof touchscreen

WAROM

Zones 2; 21&22

Technical data

Explosion-proof Touchscreen BZC-HMI□

Explosion protection			
Global (IECEx)	IECEx (applied for)		
Gas and dust	Ex db eb nA IIC T6 Gc Ex tb IIIC T80℃ Db		
Europe (ATEX)	ATEX (applied for)		
Gas and dust	Ⓔx II 3 G Ex db eb nA IIC T6 Gc Ⓔx II 2 D Ex tb IIIC T80℃ Db		
Certificates	IECEx; ATEX		
Conformity to standards	EN 60079-0, EN 60079-1, EN 60079-7, EN 60079-15, EN 60079-31 IEC 60079-0, IEC 60079-1, IEC 60079-7, IEC 60079-15, IEC 60079-31		
Enclosure material	Stainless steel		
Enclosure colour	Metal colour		
Exposed fastener	Stainless steel		
Screen Size	7. 0 inches	9. 0 inches	12.1 inches
Resolution	800×480	800×480	1280×800
Rated voltage	24V DC		
Degree of protection	IP65		
Internal&external earthing	M6/M6		
Ambient temperature	-0℃~+50℃		
Cable entries	M□ x 1.5 plug		
Cable gland (optional)	DQM-I (Ex e) is recommended. Please see P7/19~21		
Mounting	Surface type		
Note	Please specify the number and size of entries (applicable for surface type only);		

Dimension drawings (all dimensions in mm) - subject to alteration

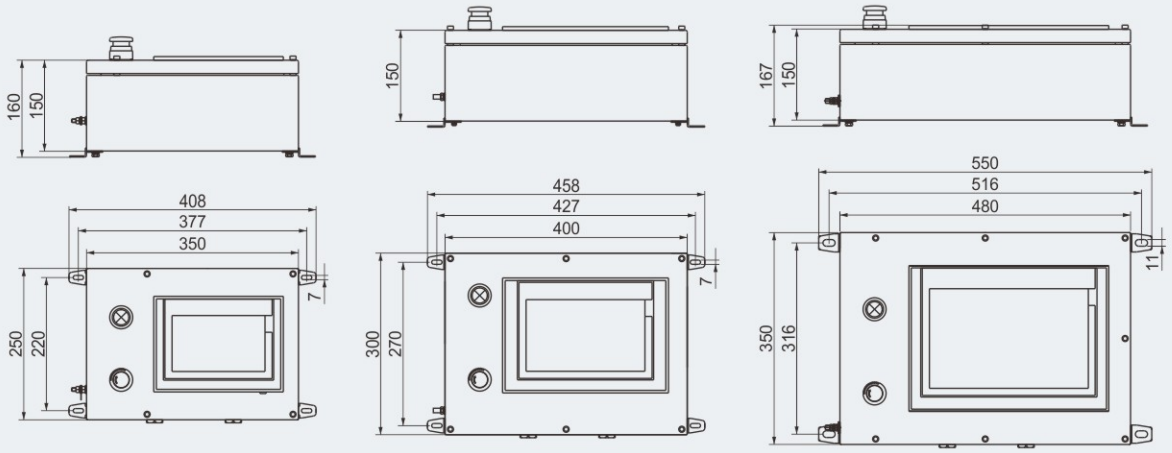

BZC-HMI/7 BZC-HMI/9 BZC-HMI/12

Components for BZC8050 Control Stations
BA8060 Series Control Buttons



- Explosion protection to
  - -CENELEC
  - -IEC
  - -NEC
- Can be used in
  - Zone 1 and Zone 2
  - Zone 21 and Zone 22
  - Class I, Zone 1 and Zone 2
  - Class I, Division 2, Groups A , B, C, D
- 2 versions of component
  - -1 NO
  - -1 NC
- Eight different ways of operation
  - -Spring-return control button
  - -Mushroom stay-put emergency control button
  - -Key-operated control button
  - -Rotary control button
  - -Double control button
  - -Mushroom turn-to-release emergency control button
  - -Push button with indicator
  - -Key-operated mushroom emergency control push button
- Mushroom stay-put emergency push button/ mushroom turn-to-release emergency push button can be equipped with protection cover, please specify when ordering. Material of protection cover: stainless steel and PC, please specify when ordering.
- Two-wire interface, can be paralleled, the maximum wire diameter is 2.5mm².

Catalogue number logic

BA8060(A for short)

A - □ □ □

- Contact code
- Control button code
- a: Cover mounting
- b: Rail mounting
- Control buttons

Zones 1&2; 21&22

Components for BZC8050 Control Stations
BA8060 Series Control Buttons

Selection table

Version	Description	Contact code	Ordering code	Weight (kg)
 a: Cover mounting	11 1NC 12	R	40090-3	0.06
	11 1NO 12	S	40090-4	0.06
 b: Rail mounting	11 1NC 12	R	40091-3	0.05
	11 1NO 12	S	40091-4	0.05

Selection table of BA8160 series of explosion-proof Button operating device

Version	Description		Code	Ordering code	Weight (kg)
	Spring-return control button	Red Green Yellow Black White	a5 a7 a8 a9 a10	40092A 40092B 40092C 40092D 40092E	0.05
	Mushroom stay-put emergency control button	Red	d	40093	0.05
	Key-operated control button	Black	e	40094	0.05
	Rotary control button	Black	b	40095	0.05
	Mushroom turn-to-release emergency control button	Red	c2	40096	0.05
	Double control button	Red/Green	h	40097	0.05
	Push button with indicator	Red Green Yellow	i j k	40098A 40098B 40098C	0.05
	Key-operated mushroom emergency control push button	Red	l	40099	0.05

Technical data

Control buttons BA8060

Explosion protection	
Global (IECEx)	IECEx CQM 24.0016U
Gas	Ex db eb IIC Gb
Europe (ATEX)	CML 24 ATEX 1224U
Gas	Ⓔx II 2 G Ex db eb IIC Gb
Certificates	IECEx; ATEX
Conformity to standards	EN 60079-0, EN 60079-1, EN 60079-7
	IEC 60079-0, IEC 60079-1, IEC 60079-7
Enclosure material	Polyamide (PA66)
Rated voltage	500V AC
Rated current	10A
Contact type	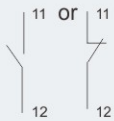
Switch capacity	AC15: Ue 480V/Ie 2.5A; Ue 240V/Ie 5A
	DC13: Ue 240V/Ie 0.5A; Ue 24V/Ie 5A
Mechanical life	10^5 times
Electrical life	10^5 times
Ambient temperature	-60℃~+90℃
Terminal	Suitable for 2.5mm^2 cable
Button element	
Material	Polyamide (PA66)
Washer	Silicon rubber
Function	
Spring-return control button	Spring-return control button
Mushroom stay-put emergency control button	Self-latching when pulled, self-locking
Key-operated control button	Rotate to lock; release with key, key movable in both ways
Rotary control button	Two-position switch function, key movable in 90°
Double control button	Spring-return control button, 1 control button element has the function of 2 control buttons
Mushroom turn-to-release emergency control button	Rotary resetting control button; self-locking

Accessories

Description	Material	Ordering code	Weight (kg)	Description (Not applicable to button switch with key)	Material	Ordering code	Weight (kg)
Cover mounting bracket 	PC	40098	0.01	Emergency push button protection cover 	PC	40198	0.02
Locking mechanism 	-	40120	0.12	Emergency push button protection cover 	Stainless steel	40199	0.10

Dimension drawings (all dimensions in mm) - subject to alteration

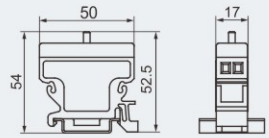

Control button, single (rail mounting)

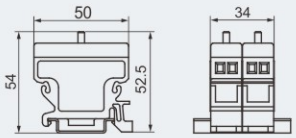

Control button, double (rail mounting)

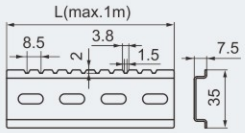

Rail

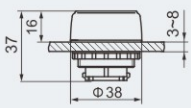

Spring-return control button

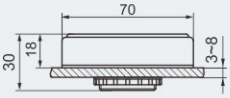

Double control button

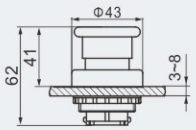

Mushroom stay-put emergency control button

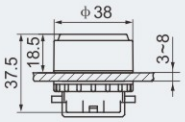

Pushbutton with indicator

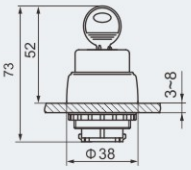

Key-operated control button

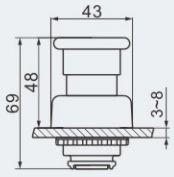

Mushroom turn-to-release emergency control button

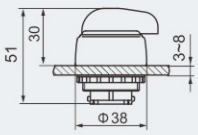

Rotary control button

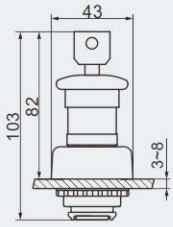

Key-operated mushroom turn-to-release emergency control push button

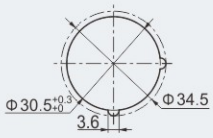

Mounting hole

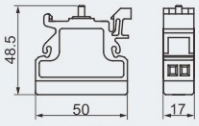

Control button , single (cover mounting)

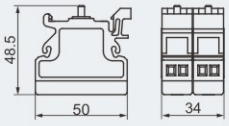

Control button, double (cover mounting)

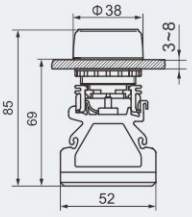

Control button cover mounting

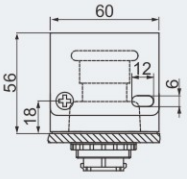

BA8050 Emergency push button with stainless steel protection cover

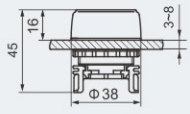

Operation for spring-return control button

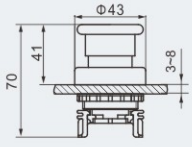

Mushroom stay-put emergency control button

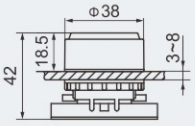

Push button with indicator

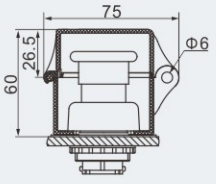

BA8050 Emergency push button with PC protection cover

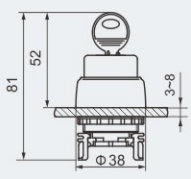

Key-operated control button

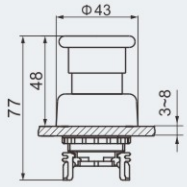

Mushroom turn-to-release emergency control button

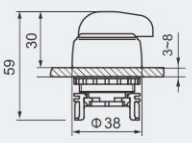

Rotary control button

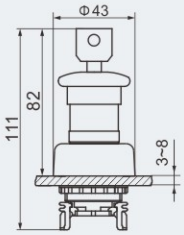

Key-operated mushroom turn-to-release emergency control push button

Components for BZC8050 Control Stations
BD8060 Series Indicators



- Explosion protection to
  - -CENELEC
  - -IEC
  - -NEC
- Can be used in
  - Zone 1 and Zone 2
  - Zone 21 and Zone 22
  - Class I, Zone 1 and Zone 2
  - Class I, Division 2, Groups A , B, C, D
- Available in
  - -red
  - -green
  - -yellow
  - -blue
  - -white
- Two mounting types
  - -cover mounting
  - -rail mounting
- Two-wire interface, can be paralleled, the maximum wire diameter is 2.5mm².
- High power, high brightness, even and harmonious.

Catalogue number logic

BD8060(D for short)

D - □ □

- Indicator code
- A: Cover mounting
- B: Rail mounting
- Indicators

WAROM

Zones 1&2; 21&22

Selection table

Version	Voltage	Schematic diagram	Colour	Code	Ordering code	Weight (kg)
Indicator  A: Cover mounting	Rated voltage: AC 220V...AC 440V Voltage range: -10%...+6% Frequency: 50Hz...60Hz		Red	Ra	40099C/40099D	0.05
			Green	Ga	40100C/40100D	
			Yellow	Ya	40101C/40101D	
			Blue	Ba	40166C/40166D	
			White	Wa	40102C/40102D	
	Rated voltage: AC/DC 48V...125V Voltage range: -10%...+6% Frequency: 0Hz...60Hz		Red	Rb	40103C/40103D	0.05
			Green	Gb	40104C/40104D	
			Yellow	Yb	40105C/40105D	
			Blue	Bb	40167C/40167D	
			White	Wb	40106C/40106D	
	Rated voltage: AC/DC 12V...36V Voltage range: -10%...+6% Frequency: 0Hz...60Hz		Red	Rc	40107C/40107D	0.05
			Green	Gc	40108C/40108D	
			Yellow	Yc	40109C/40109D	
			Blue	Bc	40168C/40168D	
			White	Wc	40110C/40110D	
 B: Rail mounting	Rated voltage: DC 220V~250V Voltage range: -10%...+6%		Red	Rd	40111C/40111D	0.05
			Green	Gd	40112C/40113D	
			Yellow	Yd	40113C/40113D	
			Blue	Bd	40169C/40169D	
			White	Wd	40114C/40114D	
BD8160 Indicator cover  A: Cover mounting			Red	a	40115A	0.05
			Green	b	40116A	
			Yellow	c	40117A	
			White	d	40118A	
			Blue	e	40170A	
BD8160 Indicator cover  B: Rail mounting			Red	a	40115B	
			Green	b	40116B	
			Yellow	c	40117B	
			White	d	40118B	
			Blue	e	40170B	

Technical data

Indicators BD8060

Explosion protection	
Global (IECEx)	IECEx CQM 24.0019U
Gas	Ex db eb IIC Gb
Europe (ATEX)	CML 24 ATEX 1227U
Gas	Ⓔx II 2 G Ex db eb IIC Gb
Certificates	IECEx; ATEX
Conformity to standards	EN 60079-0, EN 60079-1, EN 60079-7 IEC 60079-0, IEC 60079-1, IEC 60079-7
Rated voltage	AC/DC12V~36V, AC/DC48V~125V, DC220V~250V, AC220V~440V
Rated current	Max.15mA
Frequency	0Hz...60Hz
Rated output wattage	Max.3W
Service life	10^5 hours
Ambient temperature	-60℃~+90℃
Colour	Red, green, yellow, blue, white
Lamp	LED
Enclosure material	Polyamide (PA66)
Terminal	Suitable for 2.5mm² cable
Indicator cover material	PC

Dimension drawings (all dimensions in mm) - subject to alteration

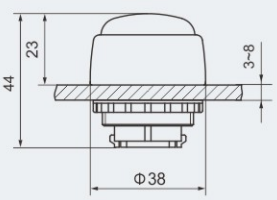

A: Cover mounting

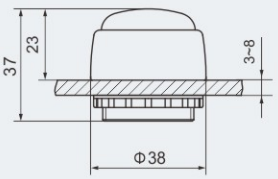

B: Rail mounting
Indicator cover

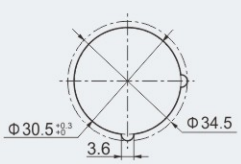

Mounting hole

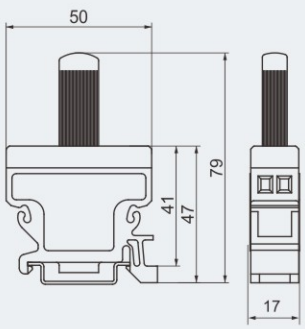

Indicator
(rail mounting)

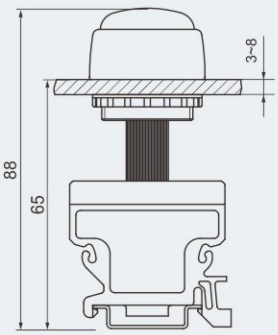

Rail mounting

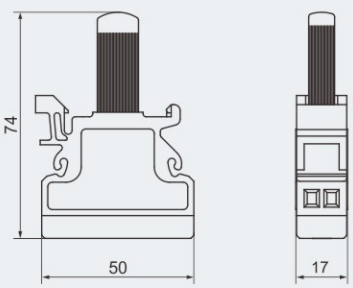

Indicator
(cover mounting)

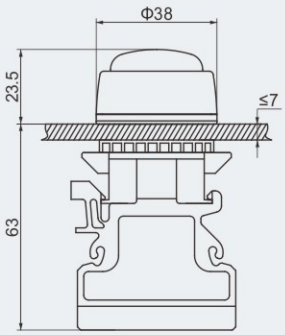

Cover mounting

Components for BZC8050 Control Stations
BK8050 Series Control Switches

- Explosion protection to
  - -CENELEC
  - -IEC
  - -NEC
- Can be used in
  - Zone 1 and Zone 2
  - Zone 21 and Zone 22
  - Class I, Zone 1 and Zone 2
  - Class I, Division 2, Groups A, B, C, D
- Number of pole: 2P, 3P, 4P, 6P.
- Available in latching and spring-return forms.



Catalogue number logic

BK8050(K for short)

K - □

- □ — Control switch code
- K — Control switches

Technical data

Control switches BK8050

Explosion protection	
Global (IECEx)	IECEx CQM 11.0011U
Gas	Ex db eb IIC Gb
Europe (ATEX)	LCIE 09 ATEX 3096U
Gas	Ⓔx II 2 G Ex db eb IIC Gb
Certificates	IECEx; ATEX; CU-TR
Conformity to standards	EN 60079-0, EN 60079-1, EN 60079-7
	IEC 60079-0, IEC 60079-1, IEC 60079-7
Enclosure material	Plastic
Rated voltage	AC: 500V, 460V, 440V, 400V, 380V, 230V
	AC/DC: 220V, 110V, 48V, 36V, 24V, 12V
Rated current	Max. 20A
Switch angle	n x 45°/n x 90°
Service life	10^5 times
Ambient temperature	-20℃~+70℃(ATEX), -60℃~+90℃(IECEx)
Cable connection	2.5mm^2
Material of rotary actuator	Polycarbonate (PC)
Panel material	Acrylonitrile-butadiene-styrene (ABS)
Seal material	Nitrile butadiene rubber (NBR)

Zones 1&2; 21&22

Selection table of control switches

Control switch code	Chart of contact	Equivalent switch	Position (solid line: location; dash line: spring return)	Instruction for equivalent function
A	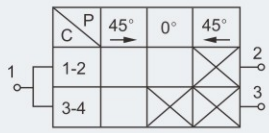	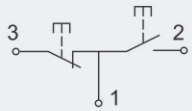	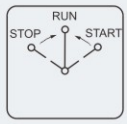	A.Functional wiring is the same as double buttons with auto-reset function.
B	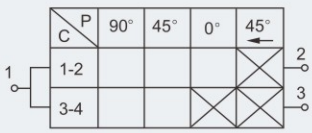	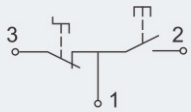	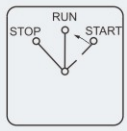	B.Functional wiring is the same as double buttons; auto-reset after start; lock-stop gear added to avoid mistake operation.
C	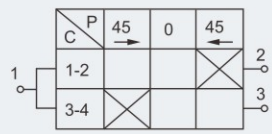	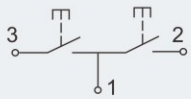	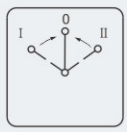	C.Button with 2 NO contacts and available at auto-reset function. Suitable for high-voltage engine control circuit or function panel uses switch code “a”.
D	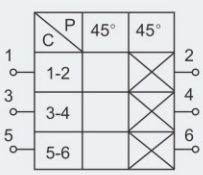		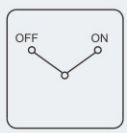	D.Low-power switch.
E	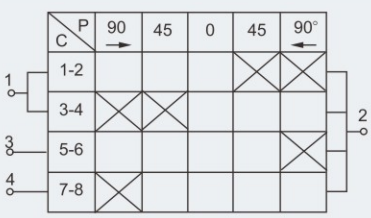	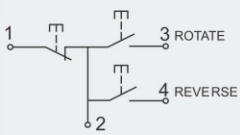	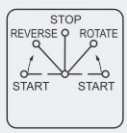	E.Function is the same as three buttons; able to control engine in forward and backward rotation. FW&BW starting positions can auto-reset.
F	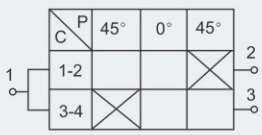		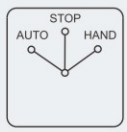	F.Selection switch with stop gear.
G	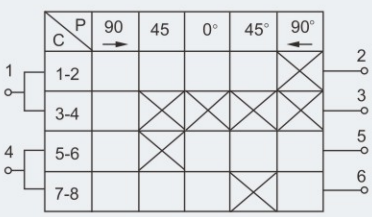	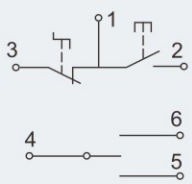	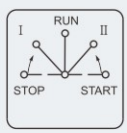	G.Be equal to mounting two buttons and one changeover switch in one axis. Possible to output contact signal or monitoring signal between start and stop.
H	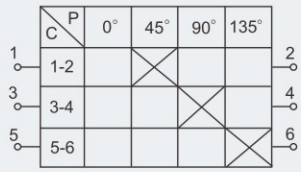	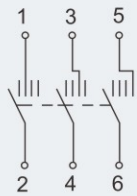	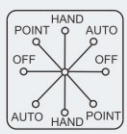	H.Multi-signals transmit gradually.

Selection table of control switches

Control switch code	Chart of contact	Equivalent switch	Position (solid line: location; dash line: spring return)	Instruction for equivalent function
I	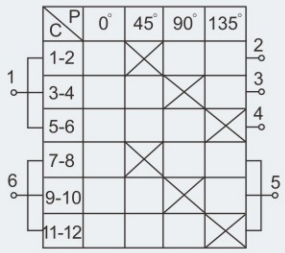	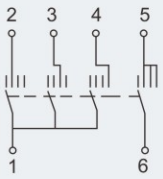	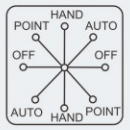	I. Add function of transmitting resultant signal on the base of function panel uses switch code “h”.
J	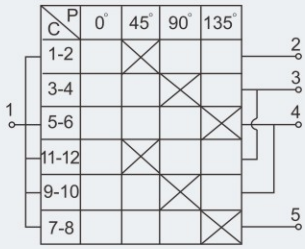	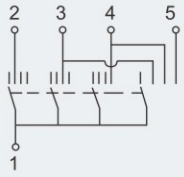	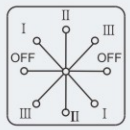	J. Two positions step; change-over gradually.
K	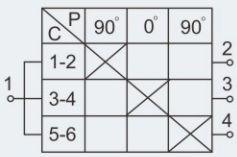		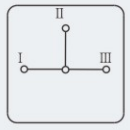	K. Changeover switch.
L	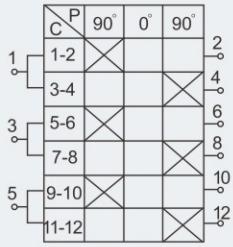	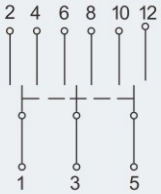	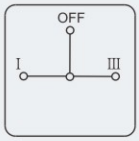	L. Selection switch with three poles and two launches.
M	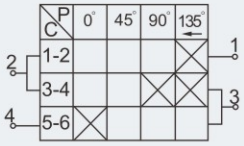	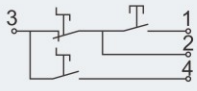	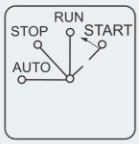	M.Three-position changeover switch among auto, manual and start; auto-reset after start; it can convert to auto gear only after passing stop gear.
N	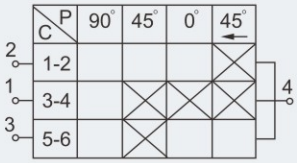	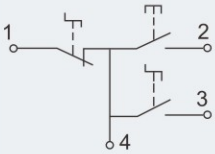	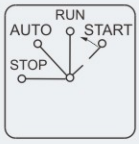	N.Structure is a little different to universal structure of switch code “m”; it directly rotates to auto gear without passing stop gear after starts.
O	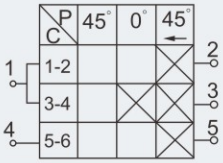	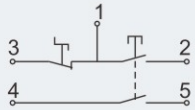	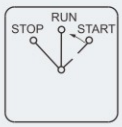	O. Double contacts auto reset for start, with lock-stop gear; lock switch at stop gear to prevent mistake operation.

Selection table of control switches

Control switch code	Chart of contact	Equivalent switch	Position (solid line: location; dash line: spring return)	Instruction for equivalent function
P	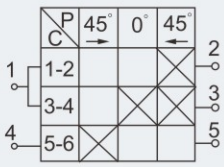	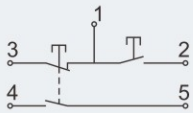	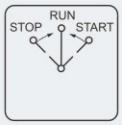	P.Double contacts for stop, to substitute switch code “a” and “c” for start and stop; auto-reset.
Q	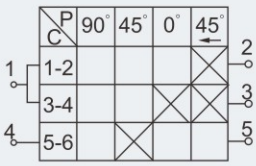	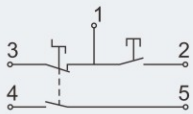	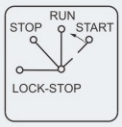	Q.Stop with double contacts, with lock stop gear; auto-reset after start; possible to add lock-stop gear to lock switch at stop to prevent mistake operation.
R	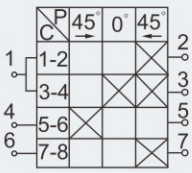	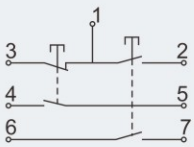	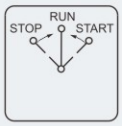	R.Double contacts for both start and stop; it is same as universal panel of switch code “a”, with auto-reset for start and stop.
S	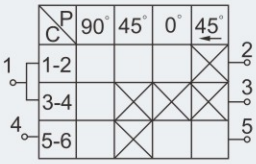	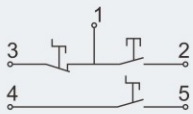	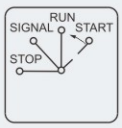	S.Transmit a contact signal before start and stop.
T	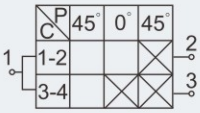	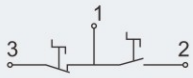	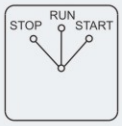	T.With lock-stop gear for start and stop to prevent mistake operation; without auto-reset.
U	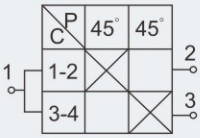	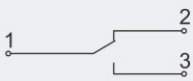	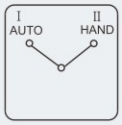	U.Double-control selection switch.
V	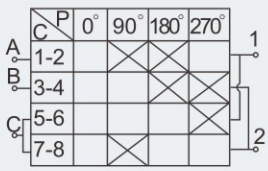	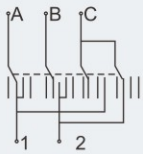	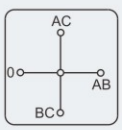	V.Changeover switch for voltage phase-changing and measuring.
W	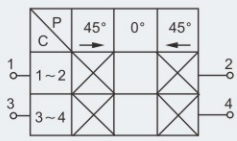		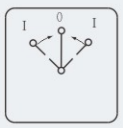	W.One 2NO auto-reset pushbutton, both left and right are the same.
X	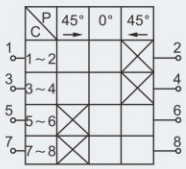	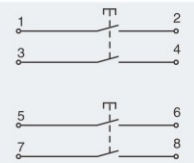	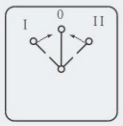	X.Two 2NO auto-reset buttons.

Selection table of control switches

Control switch code	Chart of contact	Equivalent switch	Position (solid line: location; dash line: spring return)	Instruction for equivalent function
Y	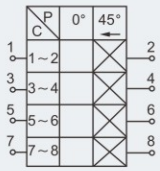	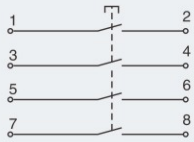	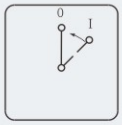	Y. Self-reset button with 4 normally open contacts.
Z	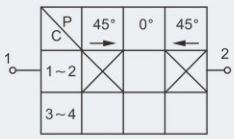		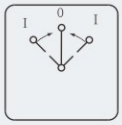	Z. Power supply program switch, disconnected in the middle, close to left and right, can be used as a fire-fighting switch.
a	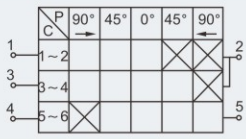	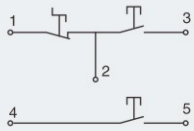	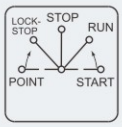	a. Used for starting and inching hybrid circuits.
b	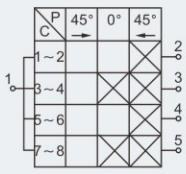	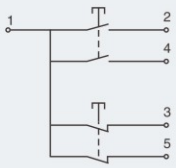	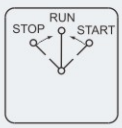	b. Double linkage switch.
e	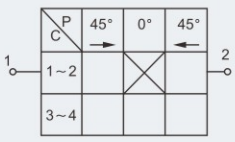		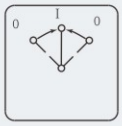	e. Emergency stop switch.
f	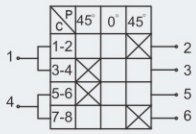	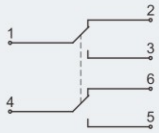	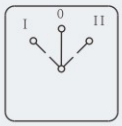	f. 2 normally open and 2 normally closed option switches.
g	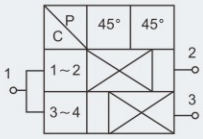	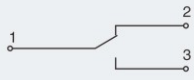	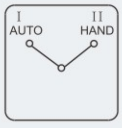	g. Double control option switch (make before break)

Accessories

Description	Illustration	Ordering code	Weight (kg)
Rotary actuator (padlockable)		40119	0.05

Dimension drawings (all dimensions in mm) - subject to alteration

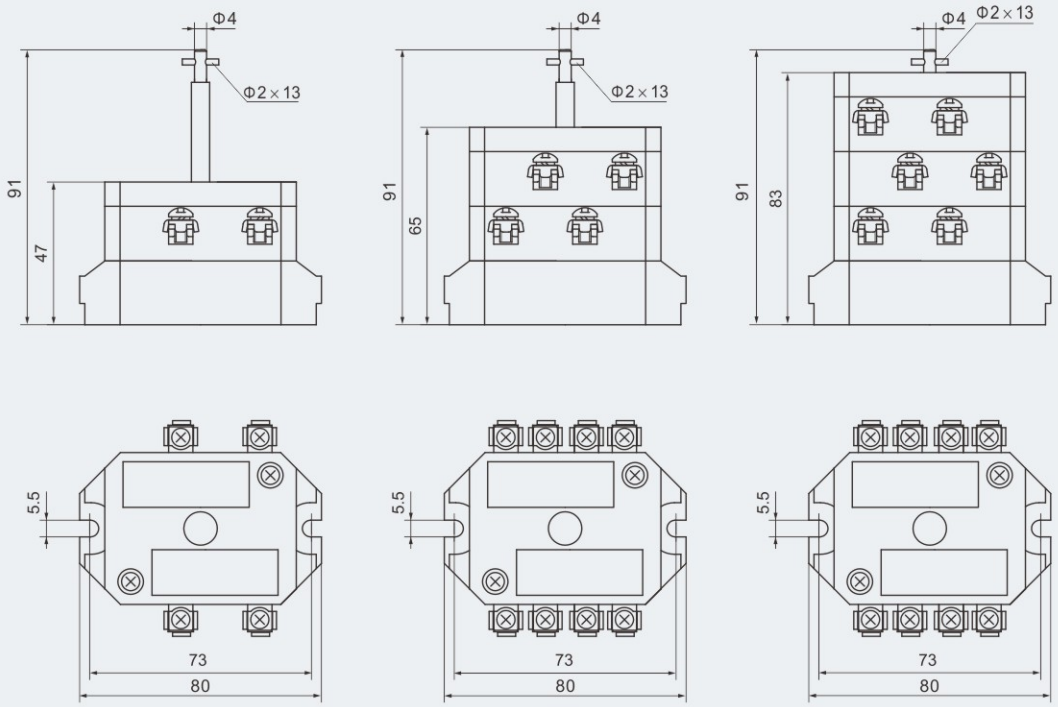

Control switch 2 poles

Control switch 3 or 4 poles

Control switch 6 poles

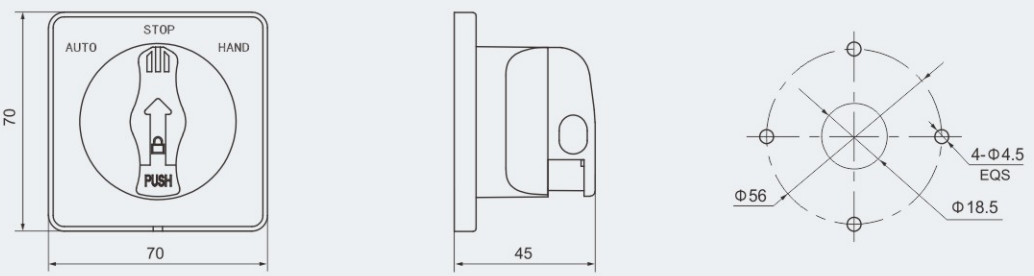

Rotary actuator

Mounting hole

Components for BZC8050 Control Stations
BB8050 Series Explosion-proof Ammeters/Voltmeters

- Explosion protection to
  - -CENELEC
  - -IEC
  - -NEC
- Can be used in
  - Zone 1 and Zone 2
  - Zone 21 and Zone 22
  - Class I, Zone 1 and Zone 2
  - Class I, Division 2, Groups A , B, C, D
- Fast comparison of measurement with set values
- Versions available
  - -Ammeter (type 72)
  - -Voltmeter (type 72)



Catalogue number logic

BB8050(B for short)

B - A (□-□)

- Ammeter range
- Ammeter
- Explosion-proof ammeters/voltmeters

B - V (□-□)

- Voltmeter range
- Voltmeter
- Explosion-proof ammeters/voltmeters

Zones 1&2; 21&22

Components for BZC8050 Control Stations
BB8050 Series Explosion-proof Ammeters/Voltmeters

Selection table

Version	Description	Overload scale	Measuring range	Ordering code	Weight (kg)
Ammeter BB8050-A(□-□) 	Direct measuring	-	0~20/40 mA	40121	0.20
			4~20/40 mA	40122	
	Direct measuring	-	0~1 A	40123	
			0~5 A	40124	
	For CT (current transformer)	2 times or 5 times	sec. 1 A	40125	
			sec. 5 A	40126	

Selection table

Version	Description	Measuring range	Ordering code	Weight (kg)
Voltmeter BB8050-V(□-□) 	Direct measuring	0~10 V	40127	0.20
		0~25 V	40128	
		0~40 V	40129	
		0~60 V	40130	
		0~100 V	40131	
		0~150 V	40132	
		0~250 V	40133	
		0~300 V	40134	
		0~450 V	40135	
		0~500 V	40136	
		0~600 V	40137	
	For PT (potential transformer)	sec. 100 V	40138	
		sec. 110 V	40139	
		sec. 120 V	40140	

Technical data

Explosion-proof ammeters/voltmeters BB8050

	Ammeter	Voltmeter
Explosion protection		
Global (IECEx)	IECEx TPS 22.0022U	IECEx TPS 22.0022U
Gas	Ex eb IIC Gb	Ex eb mb IIC Gb
Europe (ATEX)	TPS 22 ATEX 089761 0023U	TPS 22 ATEX 089761 0023U
Gas	Ⓔx II 2 G Ex eb IIC Gb	Ⓔx II 2 G Ex eb mb IIC Gb
Certificates	IECEx; ATEX	IECEx; ATEX
Conformity to standards	EN 60079-0, EN 60079-7	EN 60079-0, EN 60079-7, EN 60079-18
	IEC 60079-0, IEC 60079-7	IEC 60079-0, IEC 60079-7, IEC 60079-18
Enclosure material	Flame retardant plastic	Flame retardant plastic
Insulation voltage	/	0~600V
	DC available	DC available
Working mode	Electromagnetic type (moving iron)	Electromagnetic type (moving iron)
Accuracy	Class 1.5	Class 1.5
Overload times	5 times	
Service temperature	-60℃~+80℃	-60℃~+80℃
Cable connection	2.5mm²	2.5mm²
Size	72x72mm	72x72mm

Dimension drawings (all dimensions in mm) - subject to alteration

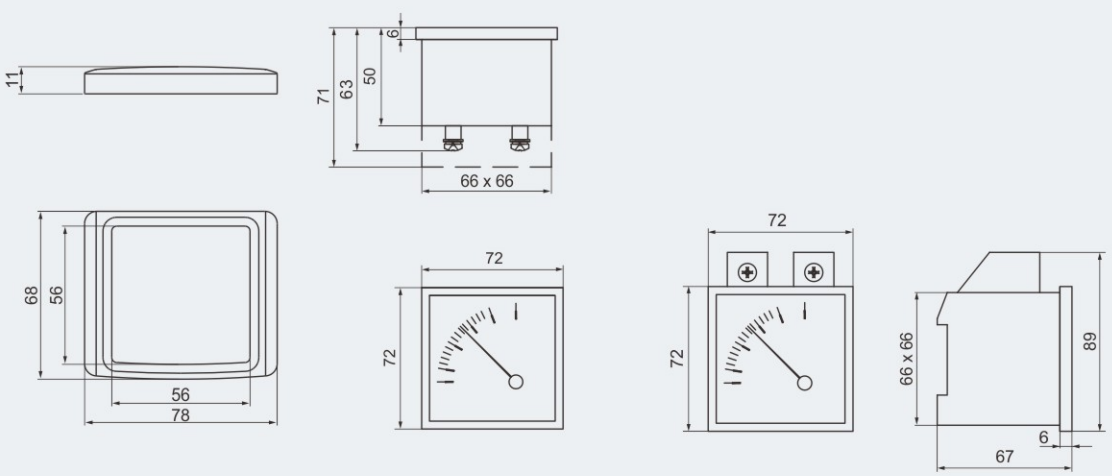

Bezel (□72mm) Cover mounting Rail mounting

Components for BZC8050 Control Stations
HRFM Series Explosion-proof Buzzer



- Explosion protection to
  -CENELEC
  -IEC
  -NEC
- Can be used in
  Zone 1 and Zone 2
  Zone 21 and Zone 22
  Class I, Zone 1 and Zone 2
  Class I, Division 2, Groups A , B, C, D
- Cover mounting.
- Explosion-proof enclosure: aluminum enclosure with PC cover
  Increased safety enclosure: Polyamide enclosure with PC cover high product strength and stable performance.
- Flashing Type: Red PC cover.
  Non-flashing Type: Black PC cover.

Catalogue number logic

HRFM - □ □ □

- S: Flashing Type (optional)
- Rated voltage
  - a: AC/DC12V~36V
  - b: AC/DC48V~250V
- A: Increased Safety Enclosure
- B: Explosion-proof Enclosure
- Explosion-proof buzzer

Selection table

Model	Rated voltage (V)	Rated current (mA)	Ex-mark
HRFM-A	AC/DC12~36	＜50	Ex eb ib mb IIC Gb/Ex tb IIIC Db
	AC/DC48~250	＜100	
HRFM-B	AC/DC12~36	＜50	Ex db ib mb IIC Gb/Ex tb IIIC Db
	AC/DC48~250	＜100	

Zones 1&2; 21&22

Technical data

Explosion-proof Buzzer HRFM

Explosion protection	
Global (IECEx)	IECEx (applied for)
Gas and dust	Ex eb ib mb IIC Gb
	Ex db ib mb IIC Gb
	Ex tb IIIC Db
Europe (ATEX)	ATEX (applied for)
Gas and dust	Ⓔx II 2 G Ex eb ib mb IIC Gb
	Ⓔx II 2 G Ex db ib mb IIC Gb
	Ⓔx II 2 D Ex tb IIIC Db
Certificates	IECEx; ATEX
Conformity to standards	EN 60079-0, EN 60079-1, EN 60079-7, EN 60079-11, EN 60079-18, EN 60079-31
	IEC 60079-0, IEC 60079-1, IEC 60079-7, , IEC 60079-11, IEC 60079-18, IEC 60079-31
Enclosure material	Ex eb: Plastic
	Ex db: Aluminium alloy
Enclosure colour	Black / Red
Rated voltage	48~250V AC/DC, 12~36V AC/DC
Rated current	<100mA, <50mA
Sound Pressure	60dB(30cm from the source)
Ambient temperature	-60℃~+90℃
Mounting	Cover mounting

Dimension drawings (all dimensions in mm) - subject to alteration

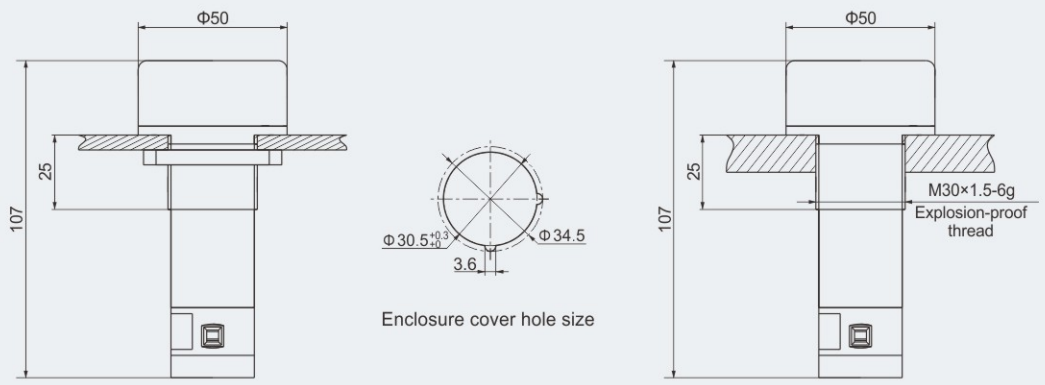

HRFM-A HRFM-B

5



Loads and Motor Switchgears

Contents

5

Motor Switches

BLK Series Explosion-proof Motor Switches (Ex db IIB) 5/2

BLK Series Explosion-proof Motor Switches (Ex db IIC) 5/6

Standard Motor Starters

BQD Series Explosion-proof Motor Starters (Ex db IIB) 5/12

BQD Series Explosion-proof Motor Starters (Ex d e IIC) 5/16

More products are under development. Please contact us or visit our website for the latest product development. We reserve the right to make alteration to the technical data, weight, dimensions, designs and products available without notice.

Motor Switches
BLK Series Explosion-proof Motor Switches (Ex db IIB)



- Explosion protection to
  -CENELEC
  -IEC
  -NEC
- Can be used in
  Zone 1 and Zone 2
  Zone 21 and Zone 22
  Class I, Zone 1 and Zone 2
  Class I, Division 1, Groups C, D
- Classified as IIB according to gas atmosphere.
- Copper-free Aluminium Alloy enclosure, powder-coated surface.
- Built-in MCB (miniature circuit breaker), MCCB (moulded case circuit breaker).
- Earth leakage protection device is optional.

Catalogue number logic

BLK - □ / □ / □ / □

- L: earth leakage protection (optional)
- Rated current (A)
- Number of pole (1P, 2P, 3P, 4P)
- Enclosure type (63, 160, 250)
- Explosion-proof motor switches

Note

1. Please select the model by Catalogue number logic above, and specify all technical data;
2. Please specify Ex-mark when ordering;
3. Entry size and direction on request.

Zones 1&2; 21&22

Technical data

Explosion-proof motor switches BLK-63/□/□/□

Explosion protection	
Global (IECEx)	IECEx CNEx 18.0034X
Gas and dust	Ex db IIB T6 Gb
	Ex tb IIIC T80℃ Db
Europe (ATEX)	CNEX 18 ATEX 0027 X
Gas and dust	Ⓔx II 2 G Ex db IIB T6 Gb
	Ⓔx II 2 D Ex tb IIIC T80℃ Db
Certificates	IECEx; ATEX
Conformity to standards	EN 60079-0, EN 60079-1, EN 60079-31
	IEC 60079-0, IEC 60079-1, IEC 60079-31
Enclosure material	Copper-free Aluminium Alloy, powder coated surface
Enclosure colour	Window grey (RAL7040)
Exposed fastener	Stainless steel
Circuit breaker	MCB (miniature circuit breaker)
Max. working voltage	440V AC 50/60Hz
Rated voltage	1P/230V AC, 2P/3P/4P/400V AC 50/60Hz
Rated current	16A/32A/63A
Number of pole	1P, 2P, 3P, 4P
Breaking capacity	6kA, 10kA, 15kA
Tripping characteristic	Instantaneous tripping range (5~10) In, (7~10) In or (10~14) In
Impulse withstand voltage	6kV
Degree of protection	IP66
Internal&external earthing	M6/M6
Ambient temperature	-60℃~+60℃
Cable entries	Standard 1~16A: 2 x M25 x 1.5 plugs
	20~32A: 2 x M32 x 1.5 plugs
	40~63A: 2 x M40 x 1.5 plugs
Cable gland (optional)	DQM-II (Ex d) or DQM-III (Ex d) is recommended. Please see P7/22~31
Entry direction	Bottom
Enclosure weight	8.00 kg
Earth leakage protection	On request

Dimension drawings (all dimensions in mm) - subject to alteration

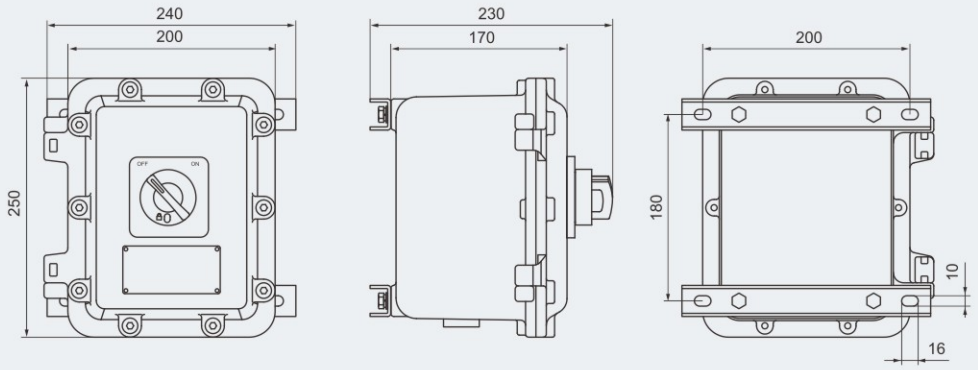

BLK-63/□/□/□

Technical data

Explosion-proof motor switches BLK-160/□/□/□

Explosion protection	
Global (IECEx)	IECEx CNEx 18.0034X
Gas and dust	Ex db IIB T6 Gb
	Ex tb IIIC T80℃ Db
Europe (ATEX)	CNEX 18 ATEX 0027 X
Gas and dust	Ⓔx II 2 G Ex db IIB T6 Gb
	Ⓔx II 2 D Ex tb IIIC T80℃ Db
Certificates	IECEx; ATEX
Conformity to standards	EN 60079-0, EN 60079-1, EN 60079-31
	IEC 60079-0, IEC 60079-1, IEC 60079-31
Enclosure material	Copper-free Aluminium Alloy, powder coated surface
Enclosure colour	Window grey (RAL7040)
Exposed fastener	Stainless steel
Circuit breaker	MCCB (moulded case circuit breaker)
Max. working voltage	690V AC 50/60Hz
	500V DC
Rated current	80A/100A/125A/160A
Number of pole	3P, 4P
Breaking capacity	380/415V AC 50/60Hz, 36kA/50kA
	440V AC 50/60Hz, 30kA/45kA
Impulse withstand voltage	8kV
Tripping characteristic	Thermomagnetic type
Degree of protection	IP66
Internal&external earthing	M6/M8
Ambient temperature	-60℃~+60℃
Cable entries	Standard 80~100A: 2 x M50 x 1.5 plugs
	125~160A: 2 x M63 x 1.5 plugs
Cable gland (optional)	DQM-II (Ex d) or DQM-III (Ex d) is recommended. Please see P7/22~31
Entry direction	Bottom
Enclosure weight	18.90kg
Earth leakage protection	On request

Dimension drawings (all dimensions in mm) - subject to alteration

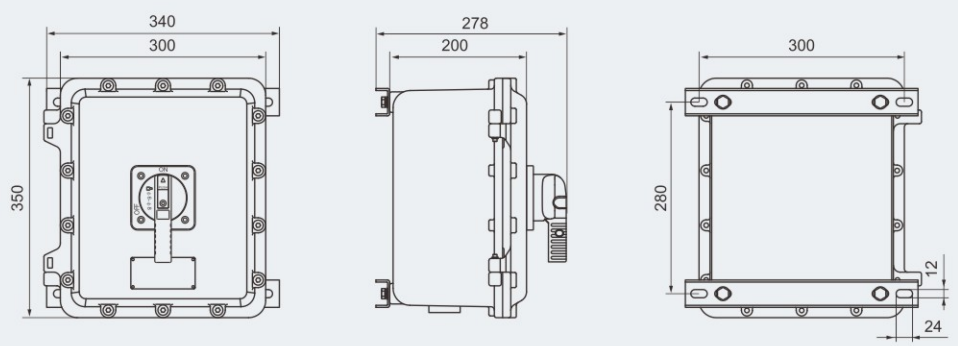

BLK-160/□/□/□

Technical data

Explosion-proof motor switches BLK-250/□/□/□

Explosion protection	
Global (IECEx)	IECEx CNEx 18.0034X
Gas and dust	Ex db IIB T6 Gb
	Ex tb IIIC T80℃ Db
Europe (ATEX)	CNEX 18 ATEX 0027 X
Gas and dust	⟨Ex⟩ II 2 G Ex db IIB T6 Gb
	⟨Ex⟩ II 2 D Ex tb IIIC T80℃ Db
Certificates	IECEx; ATEX
Conformity to standards	EN 60079-0, EN 60079-1, EN 60079-31
	IEC 60079-0, IEC 60079-1, IEC 60079-31
Enclosure material	Copper-free Aluminium Alloy, powder coated surface
Enclosure colour	Window grey (RAL7040)
Exposed fastener	Stainless steel
Circuit breaker	MCCB (moulded case circuit breaker)
Max. working voltage	690V AC 50/60Hz
	500V DC
Rated current	200A/250A
Number of pole	3P, 4P
Breaking capacity	380/415V AC 50/60Hz, 36kA/50kA
	440V AC 50/60Hz, 25kA/40kA
Impulse withstand voltage	8kV
Tripping characteristic	Thermomagnetic type
Degree of protection	IP66
Internal&external earthing	M6/M8
Ambient temperature	-60℃~+60℃
Cable entries	Standard 2 x M63 x 1.5 plugs
Cable gland (optional)	DQM-II (Ex d) or DQM-III (Ex d) is recommended. Please see P7/22~31
Entry direction	Bottom
Enclosure weight	28.50kg
Earth leakage protection	On request
Note	Rated current > 250A on request.

Dimension drawings (all dimensions in mm) - subject to alteration

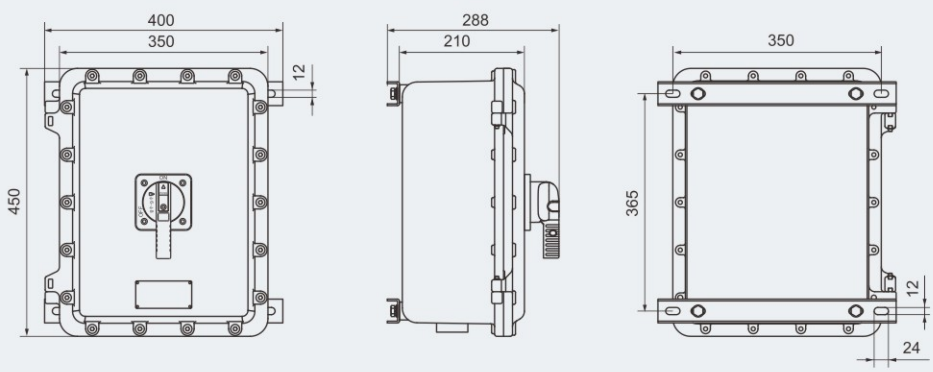

BLK-250/□/□/□

Motor Switches
BLK Series Explosion-proof Motor Switches (Ex db IIC)



- Explosion protection to
  -CENELEC
  -IEC
  -NEC
- Can be used in
  Zone 1 and Zone 2
  Zone 21 and Zone 22
  Class I, Zone 1 and Zone 2
  Class I, Division 1, Groups A , B, C, D
- Classified as IIC according to gas atmosphere.
- Copper-free Aluminium Alloy enclosure, powder coated surface.
- Built-in MCB (miniature circuit breaker), MCCB (moulded case circuit breaker).
- Earth leakage protection device is optional.

Catalogue number logic

BLK - □ / □ / □ / □

- B: Ammeter(optional)
- Rated current (A)
- Function code
  - MB□: Distribution switch
    - 1: Number of switch 1
    - 4: Number of switch 4
    - 6: Number of switch 6
  - MS: Motor start
- Enclosure type (63, 160, 250)
- Explosion-proof motor switches

Note

1. Please select the model by Catalogue number logic above, and specify all technical data;
2. Please specify Ex-mark when ordering;
3. Entry size and direction on request.

Zones 1&2; 21&22

Technical data

Explosion-proof motor switches BLK-63/MB□/□

Explosion protection	
Global (IECEx)	IECEx CQM 12.0037X
Gas and dust	Ex db IIC T6 Gb
	Ex tb IIIC T80℃ Db IP66
Europe (ATEX)	Presafe 17 ATEX 10687X
Gas and dust	Ⓔx II 2 G Ex db IIC T6 Gb
	Ⓔx II 2 D Ex tb IIIC T80℃ Db
Certificates	IECEx; ATEX; CU-TR
Conformity to standards	EN 60079-0, EN 60079-1, EN 60079-31
	IEC 60079-0, IEC 60079-1, IEC 60079-31
Enclosure material	Copper-free Aluminium Alloy, powder coated surface
Enclosure colour	Window grey (RAL7040)
Exposed fastener	Stainless steel
Circuit breaker	MCB (miniature circuit breaker)
Max. working voltage	Max.690V AC 50/60Hz; 500V DC
Rated voltage	1P/230V AC, 2P/3P/4P/400V AC 50/60Hz
Rated current	1A, 2A, 4A, 6A, 10A, 16A, 20A, 25A, 32A, 40A, 50A, 63A
Number of pole	1P, 2P, 3P, 4P
Breaking capacity	6kA, 10kA, 15kA
Impulse withstand voltage	6kV
Tripping characteristic	Instantaneous tripping range (5~10) In, (7~10) In or (10~14) In
Degree of protection	IP66
Internal&external earthing	M5/M8
Ambient temperature	-60℃~+55℃
Cable entries	Standard 1~16A: 2 x M25 x 1.5 plugs
	20~32A: 2 x M32 x 1.5 plugs
	40~63A: 2 x M40 x 1.5 plugs
Cable gland (optional)	DQM-II (Ex d) or DQM-III (Ex d) is recommended. Please see P7/22~31
Entry direction	Bottom
Enclosure weight	6.50 kg
Earth leakage protection	On request

Dimension drawings (all dimensions in mm) - subject to alteration

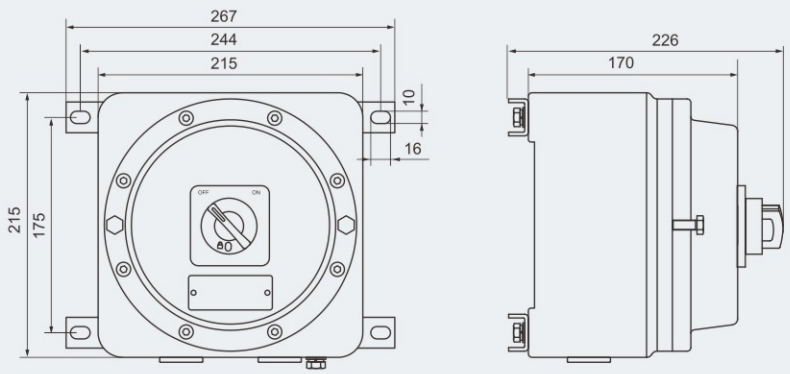

BLK-63/MB□/□

Technical data

Explosion-proof motor switches BLK-160/MB□/□

Explosion protection	
Global (IECEx)	IECEx CQM 12.0037X
Gas and dust	Ex db IIC T6 Gb
	Ex tb IIIC T80℃ Db IP66
Europe (ATEX)	Presafe 17 ATEX 10687X
Gas and dust	Ⓔx II 2 G Ex db IIC T6 Gb
	Ⓔx II 2 D Ex tb IIIC T80℃ Db
Certificates	IECEx; ATEX
Conformity to standards	EN 60079-0, EN 60079-1, EN 60079-31
	IEC 60079-0, IEC 60079-1, IEC 60079-31
Enclosure material	Copper-free Aluminium Alloy, powder coated surface
Enclosure colour	Window grey (RAL7040)
Exposed fastener	Stainless steel
Circuit breaker	MCB (miniature circuit breaker); MCCB (moulded case circuit breaker)
Max. working voltage	MCB: 440V AC 50/60Hz;
	MCCB: 690V AC 50/60Hz; 500V DC
Rated voltage	MCB: 1P/230V AC, 2P/3P/4P/400V AC 50/60Hz
Rated current	MCB: max.50A(1, 2, 4, 6, 10, 16, 20, 25, 32, 40, 50)
	MCCB: 80A, 100A, 125A, 160A
Number of pole	MCB: 1P, 2P, 3P, 4P
	MCCB: 3P, 4P
Breaking capacity	MCB: 6kA, 10kA, 15kA
	MCCB: 380/415V AC 50/60Hz, 36kA/50kA; 440V AC 50/60Hz, 30kA/45kA
Impulse withstand voltage	MCB: 6kV; MCCB: 8kV
Tripping characteristic	Thermomagnetic type
Degree of protection	IP66
Internal&external earthing	M6/M8
Ambient temperature	-60℃~+55℃
Cable entries	Standard 4 x 1~16A: 1 x M40 x 1.5 + 4 x M25 x 1.5 plugs
	4 x 20~32A: 1 x M50 x 1.5 + 4 x M32 x 1.5 plugs
	4 x 40~63A: 1 x M63 x 1.5 + 4 x M40 x 1.5 plugs
	1 x 80~100A: 2 x M50 x 1.5 plugs
	1 x 125~160A: 2 x M63 x 1.5 plugs
Cable gland (optional)	DQM-II (Ex d) or DQM-III (Ex d) is recommended. Please see P7/22~31
Entry direction	Bottom
Enclosure weight	28.00kg
Earth leakage protection	On request

Dimension drawings (all dimensions in mm) - subject to alteration

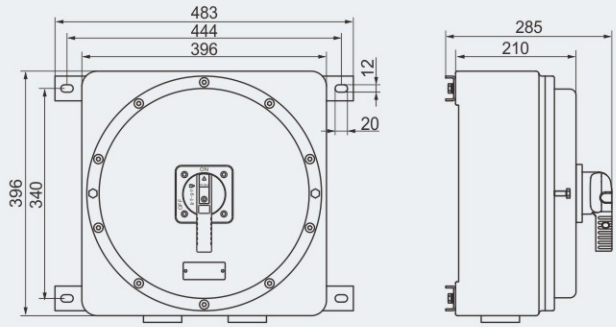

BLK-160/MB□/□

Technical data

Explosion-proof motor switches BLK-160/MS/□

Explosion protection	
Global (IECEx)	IECEx CQM 12.0037X
Gas and dust	Ex db IIC T6 Gb
	Ex tb IIIC T80℃ Db IP66
Europe (ATEX)	Presafe 17 ATEX 10687X
Gas and dust	Ⓔx II 2 G Ex db IIC T6 Gb
	Ⓔx II 2 D Ex tb IIIC T80℃ Db
Certificates	IECEx; ATEX; CU-TR
Conformity to standards	EN 60079-0, EN 60079-1, EN 60079-31
	IEC 60079-0, IEC 60079-1, IEC 60079-31
Enclosure material	Copper-free Aluminium Alloy, powder coated surface
Enclosure colour	Window grey (RAL7040)
Exposed fastener	Stainless steel
Components	MCB (miniature circuit breaker)
	AC contactor
	Thermal overload relay
	Indicator, pushbutton
Rated voltage	Max.440V AC 50/60Hz
Degree of protection	IP66
Internal&external earthing	M6/M8
Ambient temperature	-60℃~+55℃
Cable entries	Standard M□ x 1.5 plug; See Selection table as below
Cable gland (optional)	DQM-II (Ex d) or DQM-III (Ex d) is recommended. Please see P7/22~31
Entry direction	Bottom

Selection table

Version	Control motor power (kW)	Rated current of circuit breaker (A)	Adjustable range of setting current of thermal relay (A)	Rated current of contactor (A)	Cable entry size	Enclosure weight (kg)
BLK-160/MS/10	4	10	7~10, Ie=9	12	2 x M25 x 1.5	28.00
BLK-160/MS/16	5.5	16	9~13, Ie=12	18	2 x M25 x 1.5	28.00
BLK-160/MS/20	7.5	20	12~18, Ie=17	25	2 x M25 x 1.5	28.00
BLK-160/MS/32	11	32	16~24, Ie=21	32	2 x M32 x 1.5	28.00
BLK-160/MS/40	15	40	30~40, Ie=32	40	2 x M32 x 1.5	28.00
BLK-160/MS/50	18.5	50	37~50, Ie=40	50	2 x M40 x 1.5	28.00
BLK-160/MS/63	22	63	37~50, Ie=48	65	2 x M40 x 1.5	28.00

Dimension drawings (all dimensions in mm) - subject to alteration

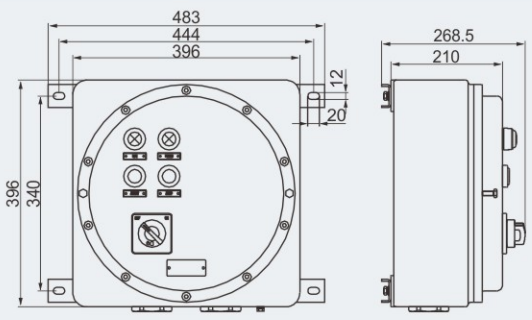

BLK-160/MS/□

Technical data

Explosion-proof motor switches BLK-250/MB□/□

Explosion protection	
Global (IECEx)	IECEx CQM 12.0037X
Gas and dust	Ex db IIC T6 Gb
	Ex tb IIIC T80℃ Db IP66
Europe (ATEX)	Presafe 17 ATEX 10687X
Gas and dust	Ⓔx II 2 G Ex db IIC T6 Gb
	Ⓔx II 2 D Ex tb IIIC T80℃ Db
Certificates	IECEx; ATEX; CU-TR
Conformity to standards	EN 60079-0, EN 60079-1, EN 60079-31
	IEC 60079-0, IEC 60079-1, IEC 60079-31
Enclosure material	Copper-free Aluminium Alloy, powder coated surface
Enclosure colour	Window grey (RAL7040)
Exposed fastener	Stainless steel
Circuit breaker	MCB (miniature circuit breaker); MCCB (moulded case circuit breaker)
Max. working voltage	MCB: 440V AC 50/60Hz;
	MCCB: 690V AC 50/60Hz; 500V DC
Rated voltage	MCB: 1P/230V AC, 2P/3P/4P/400V AC 50/60Hz
Rated current	MCB: max.50A(1, 2, 4, 6, 10, 16, 20, 25, 32, 40, 50)
	MCCB: 200A, 250A
Number of pole	MCB: 1P, 2P, 3P, 4P
	MCCB: 3P, 4P
Breaking capacity	MCB: 6kA, 10kA, 15kA
	MCCB: 380/415V AC 50/60Hz, 36kA/50kA; 440V AC 50/60Hz, 30kA/45kA
Impulse withstand voltage	MCB: 6kV; MCCB: 8kV
Tripping characteristic	Thermomagnetic type
Degree of protection	IP66
Internal&external earthing	M6/M8
Ambient temperature	-60℃~+55℃
Cable entries	Standard 6 x 1~16A: 1 x M40 x 1.5 + 6 x M25 x 1.5 plugs
	6 x 20~32A: 1 x M50 x 1.5 + 6 x M32 x 1.5 plugs
	6 x 40~63A: 1 x M63 x 1.5 + 6 x M40 x 1.5 plugs
	1 x 200~250A: 2 x M63 x 1.5 plugs
Cable gland (optional)	DQM-II (Ex d) or DQM-III (Ex d) is recommended. Please see P7/22~31
Entry direction	Bottom
Enclosure weight	31.00kg
Earth leakage protection	On request

Dimension drawings (all dimensions in mm) - subject to alteration

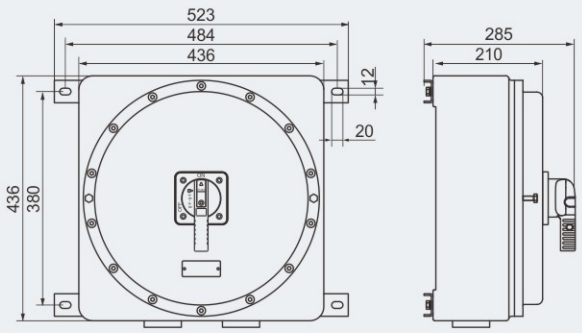

BLK-250/MB□/□

Technical data

Explosion-proof motor switches BLK-250/MS/□/B

Explosion protection	
Global (IECEx)	IECEx CQM 12.0037X
Gas and dust	Ex db IIC T6 Gb Ex tb IIIC T80℃ Db IP66
Europe (ATEX)	Presafe 17 ATEX 10687X
Gas and dust	Ⓔx II 2 G Ex db IIC T6 Gb Ⓔx II 2 D Ex tb IIIC T80℃ Db
Certificates	IECEx; ATEX; CU-TR
Conformity to standards	EN 60079-0, EN 60079-1, EN 60079-31 IEC 60079-0, IEC 60079-1, IEC 60079-31
Enclosure material	Copper-free Aluminium Alloy, powder coated surface
Enclosure colour	Window grey (RAL7040)
Exposed fastener	Stainless steel
Components	MCB (miniature circuit breaker) AC contactor Thermal overload relay Indicator, pushbutton Ammeter
Rated voltage	Max.440V AC 50/60Hz
Degree of protection	IP66
Internal&external earthing	M6/M8
Ambient temperature	-60℃~+55℃
Cable entries	Standard M□ x 1.5 plug; See Selection table as below
Cable gland (optional)	DQM-II (Ex d) or DQM-III (Ex d) is recommended. Please see P7/22~31
Entry direction	Bottom

Selection table

Version	Control motor power (kW)	Rated current of circuit breaker (A)	Adjustable range of setting current of thermal relay (A)	Rated current of contactor (A)	Cable entry size	Enclosure weight (kg)
BLK-250/MS/10/B	4	10	7~10, Ie=9	12	2 x M25 x 1.5	31.00
BLK-250/MS/16/B	5.5	16	9~13, Ie=12	18	2 x M25 x 1.5	31.00
BLK-250/MS/20/B	7.5	20	12~18, Ie=17	25	2 x M25 x 1.5	31.00
BLK-250/MS/32/B	11	32	16~24, Ie=21	32	2 x M32 x 1.5	31.00
BLK-250/MS/40/B	15	40	30~40, Ie=32	40	2 x M32 x 1.5	31.00
BLK-250/MS/50/B	18.5	50	37~50, Ie=40	50	2 x M40 x 1.5	31.00
BLK-250/MS/63/B	22	63	37~50, Ie=48	65	2 x M40 x 1.5	31.00

Dimension drawings (all dimensions in mm) - subject to alteration

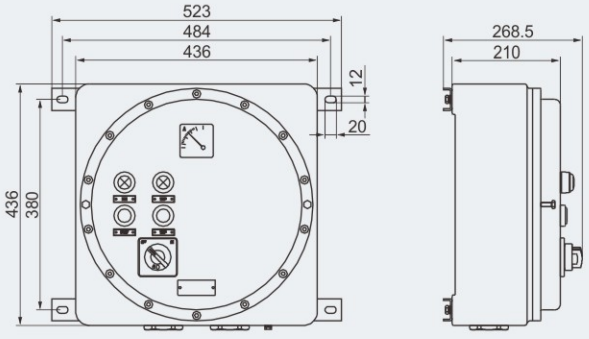

BLK-250/MS/□/B

Standard Motor Starters
BQD Series Explosion-proof Motor Starters (Ex db IIB)



- Explosion protection to
  -CENELEC
  -IEC
  -NEC
- Can be used in
  Zone 1 and Zone 2
  Zone 21 and Zone 22
  Class I, Zone 1 and Zone 2
  Class I, Division 1, Groups C, D
- Classified as IIB according to gas atmosphere.
- Different motor starters.
- Copper-free Aluminium Alloy enclosure, powder coated surface.

Catalogue number logic

BQD - □ / □ / □ / □

- S: Direct-on-line control (optional)
- N: Reversible control
- Y: Star-delta control

Setting current of thermal relay (A)
Rated current of circuit breaker (A)
Control motor power (kW)
Explosion-proof motor starters

Note

1. Please select the model by Catalogue number logic above, and specify all technical data;
2. Please specify Ex-mark when ordering;
3. Entry size, entry direction, enclosure material, etc. on request.

Zones 1&2; 21&22

Technical data

Explosion-proof motor starters (direct-on-line control) BQD-□/□/□

Explosion protection	
Global (IECEx)	IECEx CNEX 18.0035X
Gas and dust	Ex db IIB T6 or T5 Gb Ex tb IIIC T80℃ or T95℃ Db
Europe (ATEX)	CNEX 18 ATEX 0028 X
Gas and dust	Ⓔx II 2 G Ex db IIB T6 or T5 Gb Ⓔx II 2 D Ex tb IIIC T80℃ or T95℃ Db
Certificates	IECEx; ATEX
Conformity to standards	EN 60079-0, EN 60079-1, EN 60079-31 IEC 60079-0, IEC 60079-1, IEC 60079-31
Enclosure material	Copper-free Aluminium Alloy, powder coated surface
Enclosure colour	Window grey (RAL7040)
Exposed fastener	Stainless steel
Components	MCB (miniature circuit breaker) AC contactor Thermal overload relay Indicator, pushbutton
Rated voltage	380/400V AC 50/60Hz
Degree of protection	IP66
Internal&external earthing	M6/M8
Ambient temperature	T6/T80℃ for Tamb: -60℃~+50℃; T5/T95℃ for Tamb: -60℃~+60℃
Cable entries	Standard M□ x 1.5 plug; See Selection table as below
Cable gland (optional)	DQM-II (Ex d) or DQM-III (Ex d) is recommended. Please see P7/22~31
Entry direction	Bottom

Selection table

Version	Control motor power (kW)	Rated current of circuit breaker (A)	Adjustable range of setting current of thermal relay (A)	Rated current of contactor (A)	Cable entry size	Enclosure weight (kg)
BQD-4/10/7~10	4	10	7~10, Ie=9	12	2 x M25 x 1.5	20.00
BQD-5.5/16/9~13	5.5	16	9~13, Ie=12	18	2 x M25 x 1.5	20.00
BQD-7.5/20/12~18	7.5	20	12~18, Ie=17	25	2 x M25 x 1.5	20.00
BQD-11/32/16~24	11	32	16~24, Ie=21	32	2 x M32 x 1.5	30.00
BQD-15/40/30~40	15	40	30~40, Ie=32	40	2 x M32 x 1.5	30.00
BQD-18.5/50/37~50	18.5	50	37~50, Ie=40	50	2 x M40 x 1.5	30.00
BQD-22/63/37~50	22	63	37~50, Ie=48	65	2 x M40 x 1.5	30.00

Dimension drawings (all dimensions in mm) - subject to alteration

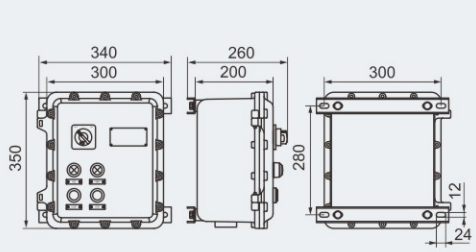

4kW-7.5kW

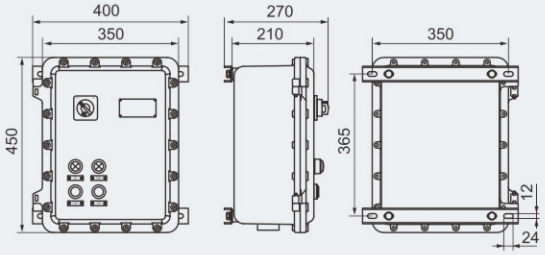

11kW-22kW

Standard Motor Starters
BQD Series Explosion-proof Motor Starters (Ex db IIB)

Technical data

Explosion-proof motor starters (reversible control) BQD-□/□/□/ N

Explosion protection	
Global (IECEx)	IECEx CNEX 18.0035X
Gas and dust	Ex db IIB T6 or T5 Gb
	Ex tb IIIC T80℃ or T95℃ Db
Europe (ATEX)	CNEX 18 ATEX 0028 X
Gas and dust	Ⓔx II 2 G Ex db IIB T6 or T5 Gb
	Ⓔx II 2 D Ex tb IIIC T80℃ or T95℃ Db
Certificates	IECEx; ATEX
Conformity to standards	EN 60079-0, EN 60079-1, EN 60079-31
	IEC 60079-0, IEC 60079-1, IEC 60079-31
Enclosure material	Copper-free Aluminium Alloy, powder coated surface
Enclosure colour	Window grey (RAL7040)
Exposed fastener	Stainless steel
Components	MCB (miniature circuit breaker)
	AC contactor
	Thermal overload relay
	Indicator, pushbutton
Rated voltage	380/400V AC 50/60Hz
Degree of protection	IP66
Internal&external earthing	M6/M8
Ambient temperature	T6/T80℃ for Tamb: -60℃~+50℃; T5/T95℃ for Tamb: -60℃~+60℃
Cable entries	Standard M□ x 1.5 plug; See Selection table as below
Cable gland (optional)	DQM-II (Ex d) or DQM-III (Ex d) is recommended. Please see P7/22~31
Entry direction	Bottom

Selection table

Version	Control motor power (kW)	Rated current of circuit breaker (A)	Adjustable range of setting current of thermal relay (A)	Rated current of contactor (A)	Cable entry size	Enclosure weight (kg)
BQD-4/10/7~10/N	4	10	7~10, Ie=9	12	2 x M25 x 1.5	20.50
BQD-5.5/16/9~13/N	5.5	16	9~13, Ie=12	18	2 x M25 x 1.5	20.50
BQD-7.5/20/12~18/N	7.5	20	12~18, Ie=17	25	2 x M25 x 1.5	20.50
BQD-11/32/16~24/N	11	32	16~24, Ie=21	32	2 x M32 x 1.5	30.50
BQD-15/40/30~40/N	15	40	30~40, Ie=32	40	2 x M32 x 1.5	30.50
BQD-18.5/50/37~50/N	18.5	50	37~50, Ie=40	50	2 x M40 x 1.5	30.50
BQD-22/63/37~50/N	22	63	37~50, Ie=48	65	2 x M40 x 1.5	30.50

Dimension drawings (all dimensions in mm) - subject to alteration

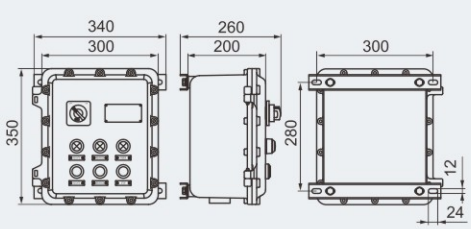

4kW-7.5kW

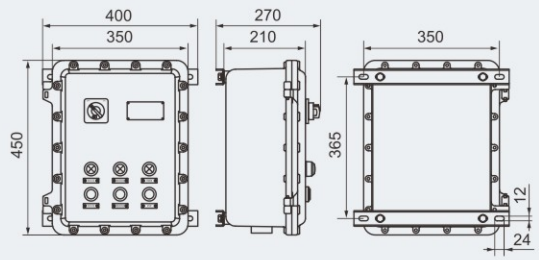

11kW-22kW

Technical data

Explosion-proof motor starters (star-delta control) BQD-□/□/□/ Y

Explosion protection	
Global (IECEx)	IECEx CNEX 18.0035X
Gas and dust	Ex db IIB T6 or T5 Gb
	Ex tb IIIC T80℃ or T95℃ Db
Europe (ATEX)	CNEX 18 ATEX 0028 X
Gas and dust	Ⓔx II 2 G Ex db IIB T6 or T5 Gb
	Ⓔx II 2 D Ex tb IIIC T80℃ or T95℃ Db
Certificates	IECEx; ATEX; CU-TR
Conformity to standards	EN 60079-0, EN 60079-1, EN 60079-31
	IEC 60079-0, IEC 60079-1, IEC 60079-31
Enclosure material	Copper-free Aluminium Alloy, powder coated surface
Enclosure colour	Window grey (RAL7040)
Exposed fastener	Stainless steel
Components	MCB (miniature circuit breaker) or MCCB (moulded case circuit breaker)
	AC contactor
	Thermal overload relay
	Indicator, pushbutton
Rated voltage	380/400V AC 50/60Hz
Degree of protection	IP66
Internal&external earthing	M6/M8
Ambient temperature	T6/T80℃ for Tamb: -60℃~+50℃; T5/T95℃ for Tamb: -60℃~+60℃
Cable entries	Standard M□ x 1.5 plug; See Selection table as below
Cable gland (optional)	DQM-II (Ex d) or DQM-III (Ex d) is recommended. Please see P7/22~31
Entry direction	Bottom

Selection table

Version	Control motor power (kW)	Rated current of circuit breaker (A)	Adjustable range of setting current of thermal relay (A)	Setting value of delay time	Cable entry size	Enclosure weight (kg)
BQD-18.5/50/17~25/Y	18.5	50	17~25, Ie=23.5	13s	3 x M50 x 1.5	40.00
BQD-22/63/23~32/Y	22	63	23~32, Ie=28	15s	3 x M50 x 1.5	40.00
BQD-30/80/30~40/Y	30	80	30~40, Ie=38	17s	3 x M63 x 1.5	54.50
BQD-37/80/37~50/Y	37	80	37~50, Ie=47	18s	3 x M63 x 1.5	54.50
BQD-45/100/48~65Y	45	100	48~65, Ie=57	20s	3 x M63 x 1.5	54.50

Dimension drawings (all dimensions in mm) - subject to alteration

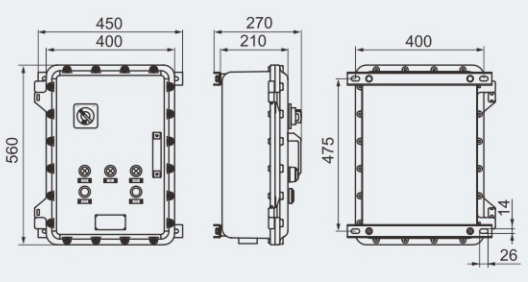

18.5kW-22kW

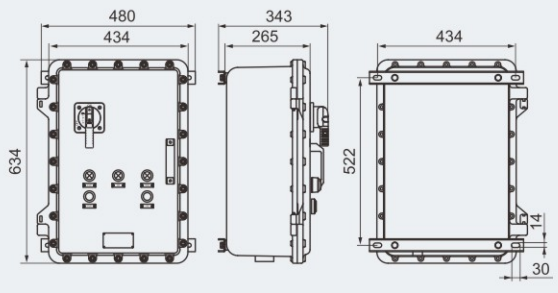

30kW-45kW

Standard Motor Starters
BQD Series Explosion-proof Motor Starters (Ex d e IIC)



- Explosion protection to
  -CENELEC
  -IEC
  -NEC
- Can be used in
  Zone 1 and Zone 2
  Class I, Zone 1 and Zone 2
  Class I, Division 2, Groups A , B, C, D
- Classified as IIC according to gas atmosphere.
- Different motor starters.
- Copper-free Aluminium Alloy enclosure, powder coated surface.

Catalogue number logic

BQD - □ / □ / □ / □

- S: Direct-on-line control (optional)
- N: Reversible control
- Y: Star-delta control

Setting current of thermal relay (A)

Rated current of circuit breaker (A)

Control motor power (kW)

Explosion-proof motor starters

Note

1. Please select the model by Catalogue number logic above, and specify all technical data;
2. Please specify Ex-mark when ordering;
3. Entry size, entry direction, enclosure material, etc. on request.

Zones 1&2

Technical data

Explosion-proof motor starters (direct-on-line control) BQD-□/□/□

Explosion protection	
Global (IECEx)	IECEx CQM 11.0017X
Gas and dust	Ex d e IIC T6 Gb
Europe (ATEX)	LCIE 10 ATEX 3075
Gas and dust	Ⓔx II 2 G Ex d e IIC T6
Certificates	IECEx; ATEX
Conformity to standards	EN 60079-0, EN 60079-1, EN 60079-7 IEC 60079-0, IEC 60079-1, IEC 60079-7
Enclosure material	Copper-free Aluminium Alloy, powder coated surface
Enclosure colour	Window grey (RAL7040)
Exposed fastener	Stainless steel
Components	MCB (miniature circuit breaker) AC contactor Thermal overload relay Indicator, pushbutton
Rated voltage	380/400V AC 50/60Hz
Degree of protection	IP65
Internal&external earthing	M6/M6
Ambient temperature	-20℃~+55℃
Cable entries	Standard M□ x 1.5 plug; See Selection table as below
Cable gland (optional)	DQM-I (Ex e) is recommended. Please see P7/19~21
Entry direction	Bottom

Selection table

Version	Control motor power (kW)	Rated current of circuit breaker (A)	Adjustable range of setting current of thermal relay (A)	Rated current of contactor (A)	Cable entry size	Enclosure weight (kg)
BQD-4/10/7~10	4	10	7~10, Ie=9	12	2 x M25 x 1.5	33.00
BQD-5.5/16/9~13	5.5	16	9~13, Ie=12	18	2 x M25 x 1.5	33.00
BQD-7.5/20/12~18	7.5	20	12~18, Ie=17	25	2 x M25 x 1.5	33.00
BQD-11/32/16~24	11	32	16~24, Ie=21	32	2 x M32 x 1.5	33.00
BQD-15/40/30~40	15	40	30~40, Ie=32	40	2 x M32 x 1.5	33.00
BQD-18.5/50/37~50	18.5	50	37~50, Ie=40	50	2 x M40 x 1.5	33.00
BQD-22/63/37~50	22	63	37~50, Ie=48	65	2 x M40 x 1.5	33.00

Dimension drawings (all dimensions in mm) - subject to alteration

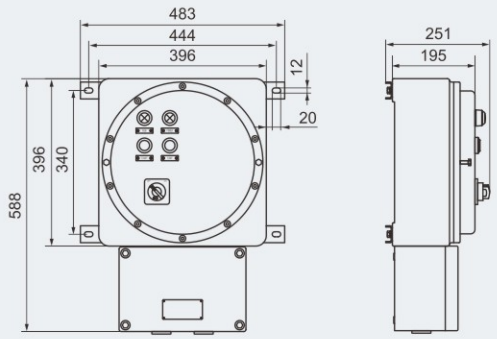

4kW-22kW

Technical data

Explosion-proof motor starters (reversible control) BQD-□/□/□/N

Explosion protection	
Global (IECEx)	IECEx CQM 11.0017X
Gas and dust	Ex d e IIC T6 Gb
Europe (ATEX)	LCIE 10 ATEX 3075
Gas and dust	Ⓔx II 2 G Ex d e IIC T6
Certificates	IECEx; ATEX
Conformity to standards	EN 60079-0, EN 60079-1, EN 60079-7 IEC 60079-0, IEC 60079-1, IEC 60079-7
Enclosure material	Copper-free Aluminium Alloy, powder coated surface
Enclosure colour	Window grey (RAL7040)
Exposed fastener	Stainless steel
Components	MCB (miniature circuit breaker) AC contactor Thermal overload relay Indicator, pushbutton
Rated voltage	380/400V AC 50/60Hz
Degree of protection	IP65
Internal&external earthing	M6/M6
Ambient temperature	-20℃~+55℃
Cable entries	Standard M□ x 1.5 plug; See Selection table as below
Cable gland(optional)	DQM-I (Ex e) is recommended. Please see P7/19~21
Entry direction	Bottom

Selection table

Version	Control motor power (kW)	Rated current of circuit breaker (A)	Adjustable range of setting current of thermal relay (A)	Rated current of contactor (A)	Cable entry size	Enclosure weight (kg)
BQD-4/10/7~10/N	4	10	7~10, Ie=9	12	2 x M25 x 1.5	35.00
BQD-5.5/16/9~13/N	5.5	16	9~13, Ie=12	18	2 x M25 x 1.5	35.00
BQD-7.5/20/12~18/N	7.5	20	12~18, Ie=17	25	2 x M25 x 1.5	35.00
BQD-11/32/16~24/N	11	32	16~24, Ie=21	32	2 x M32 x 1.5	35.00
BQD-15/40/30~40/N	15	40	30~40, Ie=32	40	2 x M32 x 1.5	35.00
BQD-18.5/50/37~50/N	18.5	50	37~50, Ie=40	50	2 x M40 x 1.5	35.00
BQD-22/63/37~50/N	22	63	37~50, Ie=48	65	2 x M40 x 1.5	35.00

Dimension drawings (all dimensions in mm) - subject to alteration

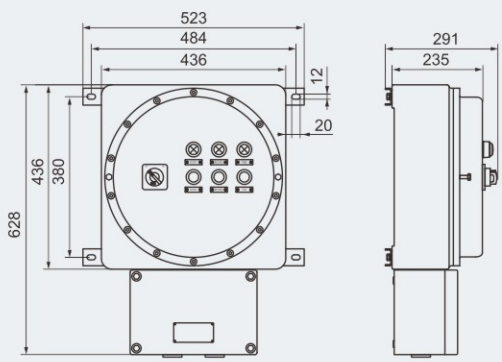

4kW-22kW

Electrical schematic diagram

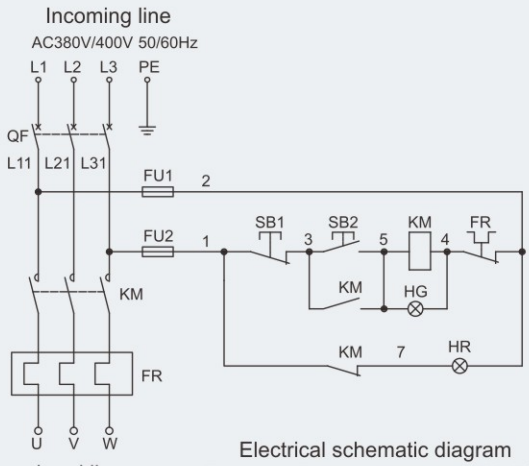

Electrical schematic diagram
Direct-on-line motor starter (IIB, IIC)

Code of electric components
QF: circuit breaker
KM: AC contactor
FR: thermal relay
FU1, FU2: fuse
SB1: stop button
SB2: start button
HR: stop indicator
HG: running indicator

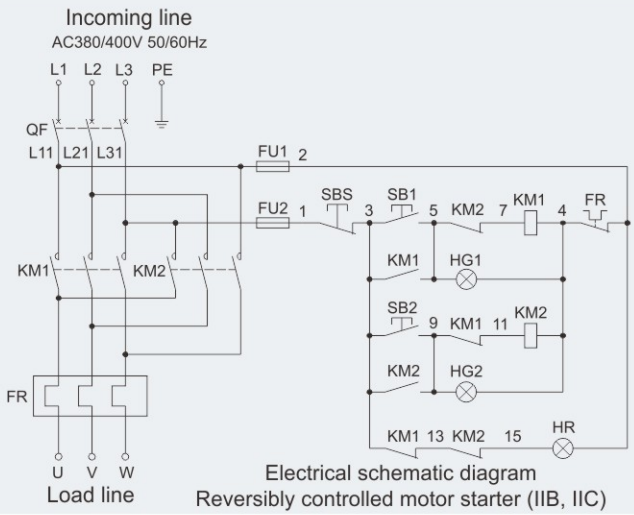

Electrical schematic diagram
Reversibly controlled motor starter (IIB, IIC)

Code of electric components
QF: circuit breaker
KM1, KM2: AC contactor
FR: thermal relay
FU1, FU2: fuse
SBS: stop button
SB1: non-reversible start button
SB2: reversible start button
HR: stop indicator
HG1: non-reversible running indicator
HG2: reversible running indicator

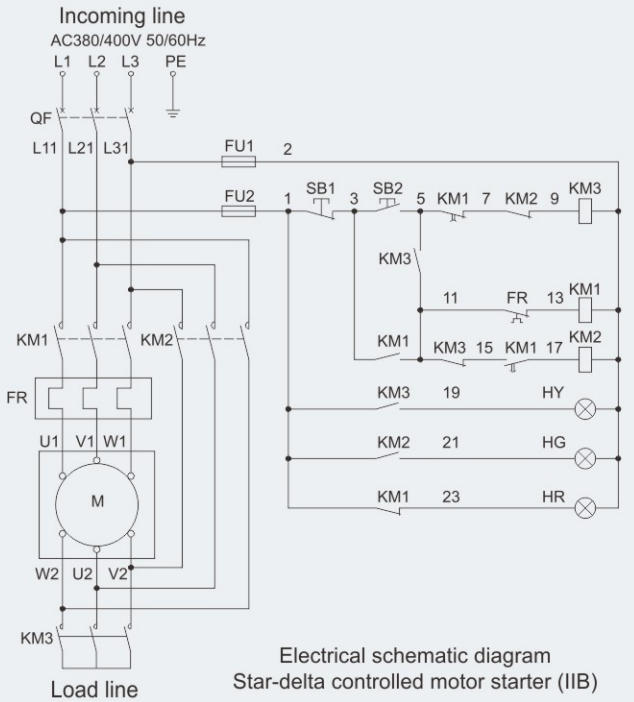

Electrical schematic diagram
Star-delta controlled motor starter (IIB)

Code of electric components
QF: circuit breaker
KM1: main contactor
KM3: star start contactor
KM2: delta running contactor
FR: thermal relay
FU1, FU2: fuse
SB1: stop button
SB2: start button
HR: stop indicator
HY: star start indicator
HG: delta running indicator



Distribution Boxes and Empty Enclosures

Contents

Distribution Boxes

BXM(D)51 Series Explosion-proof Illumination (Power) Distribution Boxes (Ex db eb IIB) 6/2

BXM(D)53 Series Explosion-proof Illumination (Power) Distribution Boxes (Ex db eb IIC) 6/8

HRMD91 Series Explosion-proof Distribution Panels (Ex db IIB+H_2, Ex db [ib] IIB+H_2) 6/14

HRMD92 Series Explosion-proof Distribution Panels (Ex db IIB, Ex db IIB+H_2, Ex db [ib] IIB, Ex db [ib] IIB+H_2) 6/22

HRMD93 Series Explosion-proof Distribution Panels (Ex db IIB, Ex db IIB+H_2, Ex db [ia Ga] IIB, Ex db [ia Ga] IIB+H_2, Ex db [ib Gb] IIB, Ex db [ib Gb] IIB+H_2) 6/30

HRMD95 Series Explosion-proof Distribution Panels (Ex db IIB+H_2, Ex db [ia Ga] IIB+H_2, Ex db [ib Gb] IIB+H_2) 6/36

HRMD96 Series Explosion-proof Distribution Panels (Ex db IIC, Ex db [ia Ga] IIC, Ex db [ib Gb] IIC) 6/39

BXM(D)8050 Series Explosion-proof Illumination (Power) Distribution Boxes (Ex db eb mb IIC) 6/44

BXM(D)8061 Series Explosion-proof Illumination (Power) Distribution Boxes (Ex db eb mb IIC) 6/52

Components for Distribution Boxes

BL8060 Series Explosion-proof Circuit Breaker Module (Ex db eb IIC, Ex db IIC) 6/58

BRT8060 Series Explosion-proof Fuses (Ex eb mb IIC) 6/64

Empty Enclosures

BXT-□-W Series Explosion-proof Enclosures (Ex db IIB+H_2, Copper-free Aluminium Alloy) 6/66

BXT-□-W Series Explosion-proof Enclosures (Ex db IIB+H_2, Copper-free Aluminium Alloy) 6/70

BXT-e Series Increased Safety Enclosures (Ex e IIC, Copper-free Aluminium Alloy) 6/72

BX-e Series Empty Enclosure (Ex eb IIC, Stainless steel or carbon steel) 6/74

BXT8050 Series Explosion-proof Enclosures (Ex e, GRP) 6/78

More products are under development. Please contact us or visit our website for the latest product development. We reserve the right to make alteration to the technical data, weight, dimensions, designs and products available without notice.

Distribution Boxes

BXM(D)51 Series Explosion-proof Illumination (Power) Distribution Boxes (Ex db eb IIB)



- Explosion protection to
  - -CENELEC
  - -IEC
  - -NEC
- Can be used in
  - Zone 1 and Zone 2
  - Zone 21 and Zone 22
  - Class I, Zone 1 and Zone 2
  - Class I, Division 2, Groups C, D
- Enclosure for modular combination (Ex d & Ex e).
- Main switch and branch switch are operated with external rotary actuator.
- Internal wiring to the terminal is finished.
- International brand of explosion-proof terminal blocks.
- Copper-free Aluminium Alloy, powder coated surface.
- Entries plugged. Cable glands on request (see P7/19~21).
- Special requirements on request.

Catalogue number logic

BX M(D) 51- □/□/□/□

- Main switch current
- K: with main switch (optional)
- Branch current
- Number of branch circuit
- Design No.
- M: illumination D: power
- Explosion-proof distribution boxes

WAROM

Zones 1&2; 21&22

Technical data

Explosion-proof illumination distribution boxes BXM51-□/□/□/□

Explosion protection	
Global (IECEx)	IECEx PCET 24.0032X
Gas and dust	Ex db eb IIB T5...T4 Gb Ex tb IIIC T80℃ Db
Europe (ATEX)	ATEX (applied for)
Gas and dust	Ⓔx II 2 G Ex db eb IIB T5...T4 Gb Ⓔx II 2 G Ex tb IIIC T80℃ Db
Certificates	IECEx; ATEX; CU-TR
Conformity to standards	EN 60079-0, EN 60079-1, EN 60079-7, EN 60079-31 IEC 60079-0, IEC 60079-1, IEC 60079-7, IEC 60079-31
General power supply	Rated voltage: Max. AC 690V 50/60Hz, Max. DC 500V; Rated current: Max. 250A
Branch current	1A, 2A, 4A, 6A, 10A, 16A, 20A, 25A, 32A
Exposed fastener	Stainless steel
Enclosure	
Enclosure material	Copper-free Aluminium Alloy, powder coated surface
Enclosure colour	Window grey (RAL7040)
Enclosure type	Modular combination (Ex d & Ex e); MCB, MCCB or other components in Ex d compartment, explosion-proof indicators and terminals in Ex e compartment.
Built-in components	
Main switch	MCB (miniature circuit breaker) or MCCB (moulded case circuit breaker) Note: earth leakage protection on request
Branch switch	MCB (miniature circuit breaker) or MCCB (moulded case circuit breaker) Note: earth leakage protection on request
Terminal	International brand of explosion-proof terminal blocks
Indicator	Red
Degree of protection	IP66
Internal&external earthing	M6/M8
Ambient temperature	T5 for Tamb: -40℃~+40℃ T4/T80℃ for Tamb: -40℃~+60℃
Cable entries	Standard M□ x 1.5 plug (see the Selection table on P6/4)
Cable gland (optional)	DQM-I (Ex e) is recommended. Please see P7/19~21
Entry direction	Bottom
Mounting	Surface type (standard), Pedestal type (optional)

Electrical schematic diagram

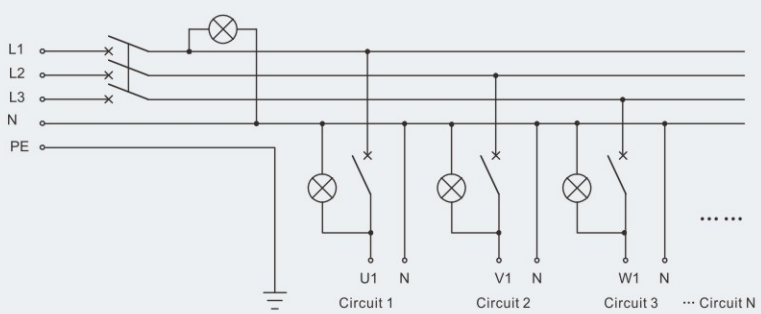

BXM51 Series explosion-proof illumination distribution boxes

Distribution Boxes
BXM51 Series Explosion-proof Illumination Distribution Boxes (Ex db eb IIB)

Selection table of BXM 51 series explosion-proof illumination distribution boxes

Version	Description					Cable entries
	Main switch	Number of branch circuit	Branch switch	Branch current	Number of indicator	
BXM51-4/□/K/□	MCB or MCCB Current: max. 100A	4	MCB 1 P/2 P	1A 2A 4A 6A 10A 16A 20A 25A 32A On request	1+4	1 x M40 x 1.5 + 4 x M25 x 1.5
BXM51-6/□/K/□		6			1+6	1 x M40 x 1.5 + 6 x M25 x 1.5
BXM51-8/□/K/□		8			1+8	1 x M40 x 1.5 + 8 x M25 x 1.5
BXM51-10/□/K/□		10			1+10	1 x M40 x 1.5 + 10 x M25 x 1.5
BXM51-12/□/K/□		12			1+12	1 x M40 x 1.5 + 12 x M25 x 1.5
BXM51-4/□	—	4	MCB 1 P/2 P	1A 2A 4A 6A 10A 16A 20A 25A 32A On request	4	1 x M40 x 1.5 + 4 x M25 x 1.5
BXM51-6/□		6			6	1 x M40 x 1.5 + 6 x M25 x 1.5
BXM51-8/□		8			8	1 x M40 x 1.5 + 8 x M25 x 1.5
BXM51-10/□		10			10	1 x M40 x 1.5 + 10 x M25 x 1.5
BXM51-12/□		12			12	1 x M40 x 1.5 + 12 x M25 x 1.5

Note

1. Please specify the number and size of cable entries and sides of the enclosure to be fitted.
2. Electrical schematic diagram shall be provided by user. Photo switch, AC contactor, thermal relay or others on request.
3. Please specify mounting type when ordering.
4. Rainproof canopy on request.

Technical data

Explosion-proof power distribution boxes BXD51-□/□/□/□

Explosion protection	
Global (IECEx)	IECEx PCET 24.0032X
Gas and dust	Ex db eb IIB T5...T4 Gb
	Ex tb IIIC T80℃ Db
Europe (ATEX)	ATEX (applied for)
Gas and dust	Ⓔx II 2 G Ex db eb IIB T5...T4 Gb
	Ⓔx II 2 G Ex tb IIIC T80℃ Db
Certificates	IECEx; ATEX; CU-TR
Conformity to standards	EN 60079-0, EN 60079-1, EN 60079-7, EN 60079-31
	IEC 60079-0, IEC 60079-1, IEC 60079-7, IEC 60079-31
General power supply	Rated voltage: Max. AC 690V 50/60Hz, Max. DC 500V; Rated current: Max. 250A
Branch current	1A, 2A, 4A, 6A, 10A, 16A, 20A, 25A, 32A, 40A, 50A, 63A
Exposed fastener	Stainless steel
Enclosure	
Enclosure material	Copper-free Aluminium Alloy, powder coated surface
Enclosure colour	Window grey (RAL7040)
Enclosure type	Modular combination (Ex d & Ex e); MCB, MCCB or other components in Ex d compartment, explosion-proof indicators and terminals in Ex e compartment.
Built-in components	
Main switch	MCB (miniature circuit breaker) or MCCB (moulded case circuit breaker)
	Note: earth leakage protection on request
Branch switch	MCB (miniature circuit breaker) or MCCB (moulded case circuit breaker)
	Note: earth leakage protection on request
Terminal	International brand of explosion-proof terminal blocks
Indicator	Red
Degree of protection	IP66
Internal&external earthing	M6/M8
Ambient temperature	T5 for Tamb: -40℃~+40℃
	T4/T80℃ for Tamb: -40℃~+60℃
Cable entries	Standard M□ x 1.5 plug (see the Selection table on P6/6)
Cable gland (optional)	DQM-I (Ex e) is recommended. Please see P7/19~21
Entry direction	Bottom
Mounting	Surface type (standard), Pedestal type (optional)

Electrical schematic diagram

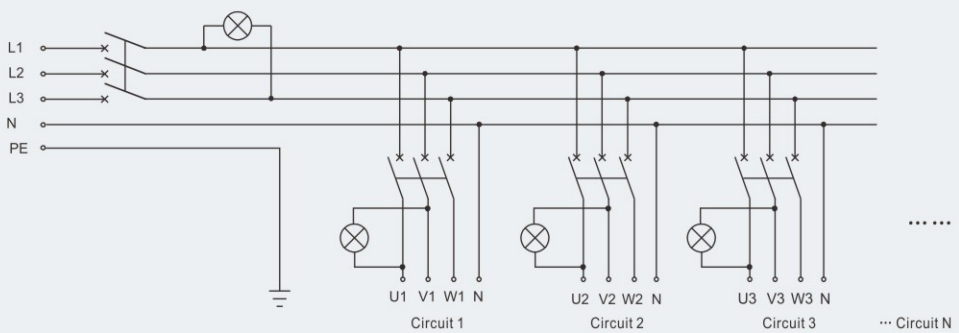

BXD51 Series explosion-proof power distribution boxes

Distribution Boxes
BXD51 Series Explosion-proof Power Distribution Boxes (Ex db eb IIB)

Selection table of BXD51 series explosion-proof power distribution boxes

Version	Description					Cable entries
	Main switch	Number of branch circuit	Branch switch	Branch current	Number of indicator	
BXD51-4/□/K/□	MCB or MCCB Current: max. 250A	4	MCB 3P	1A 2A 4A 6A 10A 16A 20A 25A 32A 40A 50A 63A On request	1+4	1 x M50 x 1.5 + 4 x M25 x 1.5
BXD51-6/□/K/□		6			1+6	1 x M50 x 1.5 + 6 x M25 x 1.5
BXD51-8/□/K/□		8			1+8	1 x M50 x 1.5 + 8 x M25 x 1.5
BXD51-10/□/K/□		10			1+10	1 x M50 x 1.5 + 10 x M25 x 1.5
BXD51-12/□/K/□		12			1+12	1 x M50 x 1.5 + 12 x M25 x 1.5
BXD51-4/□	—	4	MCB 3P	1A 2A 4A 6A 10A 16A 20A 25A 32A 40A 50A 63A On request	4	1 x M50 x 1.5 + 4 x M25 x 1.5
BXD51-6/□		6			6	1 x M50 x 1.5 + 6 x M25 x 1.5
BXD51-8/□		8			8	1 x M50 x 1.5 + 8 x M25 x 1.5
BXD51-10/□		10			10	1 x M50 x 1.5 + 10 x M25 x 1.5
BXD51-12/□		12			12	1 x M50 x 1.5 + 12 x M25 x 1.5

Note

1. Please specify the number and size of cable entries and sides of the enclosure to be fitted.
2. Electrical schematic diagram shall be provided by user. Photo switch, AC contactor, thermal relay or others on request.
3. Please specify mounting type when ordering.
4. Rainproof canopy on request.

Dimension drawings (all dimensions in mm) - subject to alteration

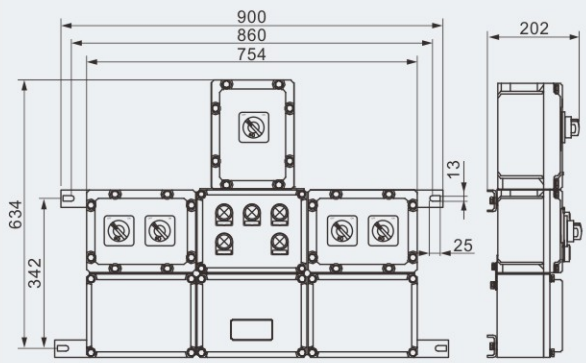

BXM(D)51-4/□/K/□

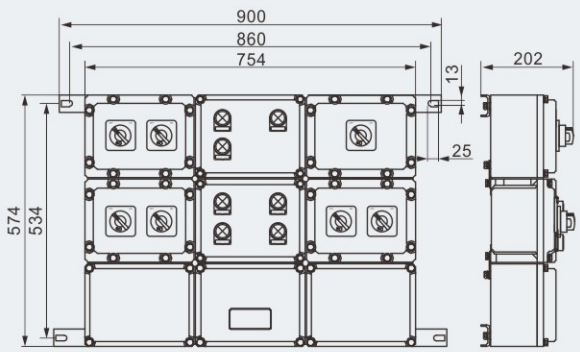

BXM(D)51-6/□/K/□

Dimension drawings (all dimensions in mm) - subject to alteration

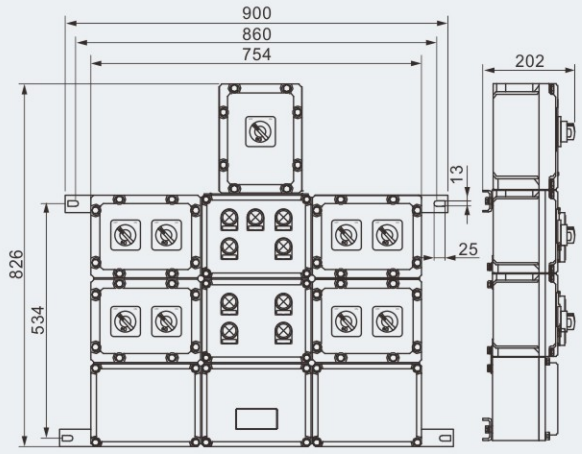

BXM(D)51-8/□/K/□

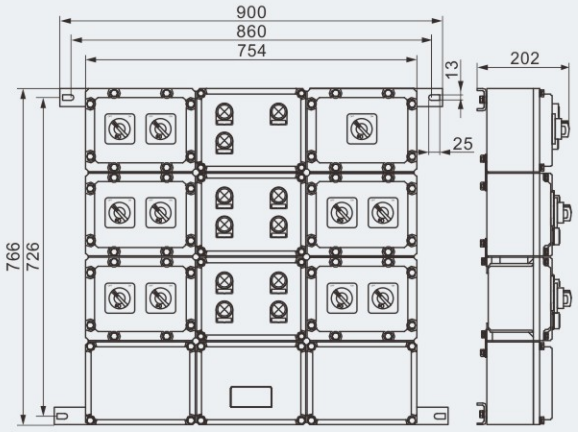

BXM(D)51-10/□/K/□

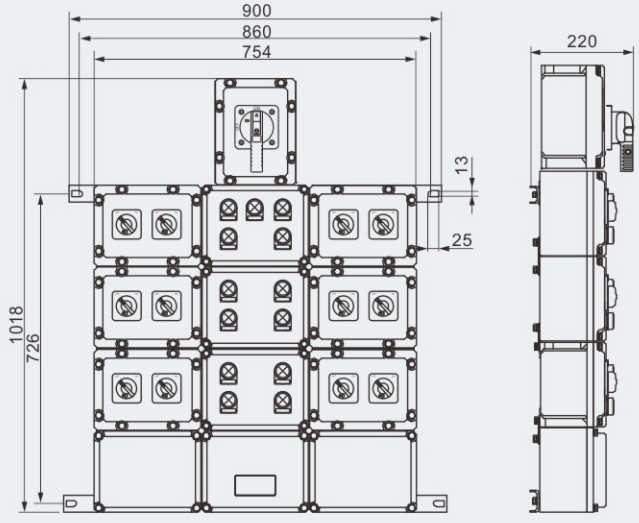

BXM(D)51-12/□/K/□

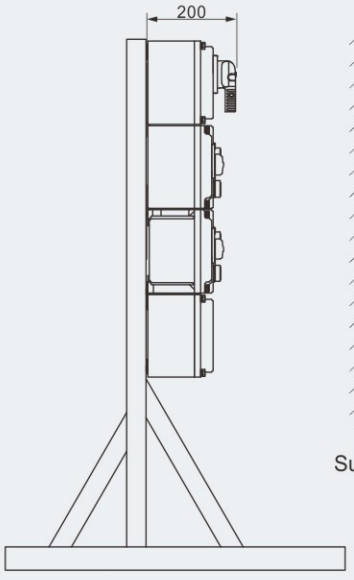

Pedestal type

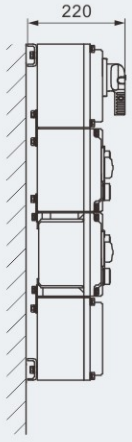

Surface type

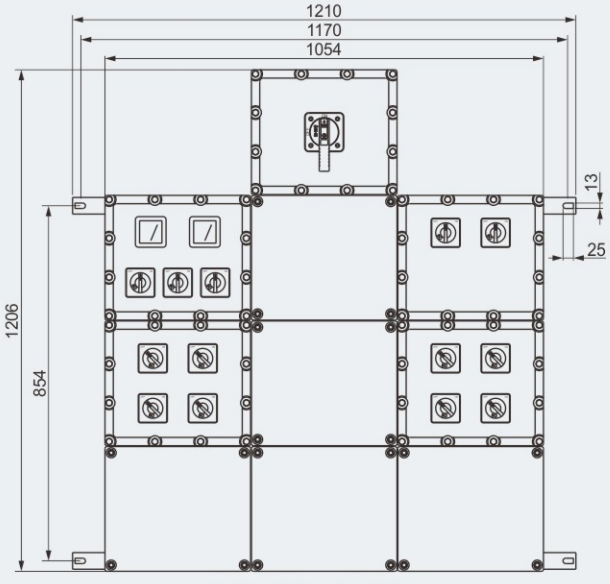

BXM(D)51-10/□/K/□

Distribution Boxes

BXM(D)53 Series Explosion-proof Illumination (Power) Distribution Boxes (Ex db eb IIC)



- Explosion protection to
  - -CENELEC
  - -IEC
  - -NEC
- Can be used in
  - Zone 1 and Zone 2
  - Zone 21 and Zone 22
  - Class I, Zone 1 and Zone 2
  - Class I, Division 2, Groups A, B, C, D
- Enclosure for modular combination (Ex d & Ex e).
- Main switch and branch switch are operated with external rotary actuator.
- Internal wiring to the terminal is finished.
- International brand of explosion-proof terminal blocks.
- Copper-free Aluminium Alloy, powder coated surface.
- Entries plugged. Cable glands on request (see P7/17~19).
- Special requirements on request.

Catalogue number logic

BX M(D) 53- □/□/□/□

- Main switch current
- K: with main switch (optional)
- Branch current
- Number of branch circuit
- Design No.
- M: illumination D: power
- Explosion-proof distribution boxes

WAROM

Zones 1&2; 21&22

Technical data

Explosion-proof illumination distribution boxes BXM53-□/□/□/□

Explosion protection	
Global (IECEx)	IECEx CQM 11.0042X
Gas and dust	Ex db eb IIC T6 Gb Ex tb IIIC T80℃ Db IP66
Europe (ATEX)	TÜV CY 18 ATEX 0206016X
Gas and dust	Ⓔx II 2 G Ex db eb IIC T6 Gb Ⓔx II 2 D Ex tb IIIC T80℃ Db IP66
Certificates	IECEx; ATEX; CU-TR
Conformity to standards	EN 60079-0, EN 60079-1, EN 60079-7, EN 60079-31 IEC 60079-0, IEC 60079-1, IEC 60079-7, IEC 60079-31
General power supply	Rated voltage: max. 690V AC 50/60Hz; Rated current: max.100A
Branch current	1A, 2A, 4A, 6A, 10A, 16A, 20A, 25A, 32A
Exposed fastener	Stainless steel
Enclosure	
Enclosure material	Copper-free Aluminium Alloy, powder coated surface
Enclosure colour	Window grey (RAL7040)
Enclosure type	Modular combination (Ex d & Ex e); MCB, MCCB or other components in Ex d compartment, explosion-proof indicators and terminals in Ex e compartment.
Built-in components	
Main switch	MCB (miniature circuit breaker) or MCCB (moulded case circuit breaker) Note: earth leakage protection on request
Branch switch	MCB (miniature circuit breaker) or MCCB (moulded case circuit breaker) Note: earth leakage protection on request
Terminal	International brand of explosion-proof terminal blocks
Indicator	Red
Degree of protection	IP66
Internal&external earthing	M6/M8
Ambient temperature	-40℃~+55℃
Cable entries	Standard M□ x 1.5 plug (see the Selection table on P6/10)
Cable gland (optional)	DQM-I (Ex e) is recommended. Please see P7/19~21
Entry direction	Bottom
Mounting	Surface type (standard) Pedestal type (optional)

Electrical schematic diagram

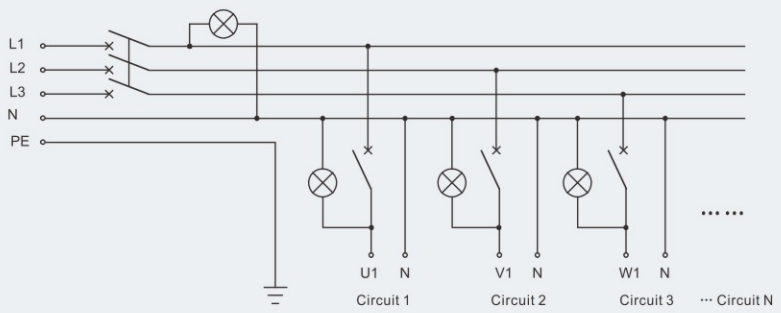

BXM53 Series explosion-proof illumination distribution boxes

Distribution Boxes
BXM53 Series Explosion-proof Illumination Distribution Boxes (Ex db eb IIC)

Selection table of BXM53 series explosion-proof illumination distribution boxes

Version	Description					Cable entries
	Main switch	Number of branch circuit	Branch switch	Branch current	Number of indicator	
BXM53-4/□/K/□	MCB or MCCB Current: max. 100A	4	MCB 1P/2P	1A 2A 4A 6A 10A 16A 20A 25A 32A On request	1+4	1 x M40 x 1.5 + 4 x M25 x 1.5
BXM53-6/□/K/□		6			1+6	1 x M40 x 1.5 + 6 x M25 x 1.5
BXM53-8/□/K/□		8			1+8	1 x M40 x 1.5 + 8 x M25 x 1.5
BXM53-10/□/K/□		10			1+10	1 x M40 x 1.5 + 10 x M25 x 1.5
BXM53-12/□/K/□		12			1+12	1 x M40 x 1.5 + 12 x M25 x 1.5
BXM53-4/□	—	4	MCB 1P/2P	1A 2A 4A 6A 10A 16A 20A 25A 32A On request	4	1 x M40 x 1.5 + 4 x M25 x 1.5
BXM53-6/□		6			6	1 x M40 x 1.5 + 6 x M25 x 1.5
BXM53-8/□		8			8	1 x M40 x 1.5 + 8 x M25 x 1.5
BXM53-10/□		10			10	1 x M40x 1.5 + 10 x M25 x 1.5
BXM53-12/□		12			12	1 x M40 x 1.5 + 12 x M25 x 1.5

Note

1. Please specify the number and size of cable entries and sides of the enclosure to be fitted.
2. Electrical schematic diagram shall be provided by user. Photo switch, AC contactor, thermal relay or others on request.
3. Please specify mounting type when ordering.
4. Rainproof canopy on request.

Technical data

Explosion-proof power distribution boxes BXD53-□/□/□/□

Explosion protection	
Global (IECEx)	IECEx CQM 11.0042X
Gas and dust	Ex db eb IIC T5 Gb
	Ex tb IIIC T80℃ Db IP66
Europe (ATEX)	TÜV CY 18 ATEX 0206016X
Gas and dust	Ⓔx II 2 G Ex db eb IIC T5 Gb
	Ⓔx II 2 D Ex tb IIIC T80℃ Db IP66
Certificates	IECEx; ATEX; CU-TR
Conformity to standards	EN 60079-0, EN 60079-1, EN 60079-7, EN 60079-31
	IEC 60079-0, IEC 60079-1, IEC 60079-7, IEC 60079-31
General power supply	Rated voltage: max. 690V AC 50/60Hz; Rated current: max.200A
Branch current	1A, 2A, 4A, 6A, 10A, 16A, 20A, 25A, 32A, 40A, 50A, 63A
Exposed fastener	Stainless steel
Enclosure	
Enclosure material	Copper-free Aluminium Alloy, powder coated surface
Enclosure colour	Window grey (RAL7040)
Enclosure type	Modular combination (Ex d & Ex e); MCB, MCCB or other components in Ex d compartment, explosion-proof indicators and terminals in Ex e compartment.
Built-in components	
Main switch	MCB (miniature circuit breaker) or MCCB (moulded case circuit breaker)
	Note: earth leakage protection on request
Branch switch	MCB (miniature circuit breaker) or MCCB (moulded case circuit breaker)
	Note: earth leakage protection on request
Terminal	International brand of explosion-proof terminal blocks
Indicator	Red
Degree of protection	IP66
Internal&external earthing	M6/M8
Ambient temperature	-40℃~+55℃
Cable entries	Standard M□ x 1.5 plug (see the Selection table on P6/12)
Cable gland (optional)	DQM-I (Ex e) is recommended. Please see P7/19~21
Entry direction	Bottom
Mounting	Surface type (standard)
	Pedestal type (optional)

Electric schematic diagram

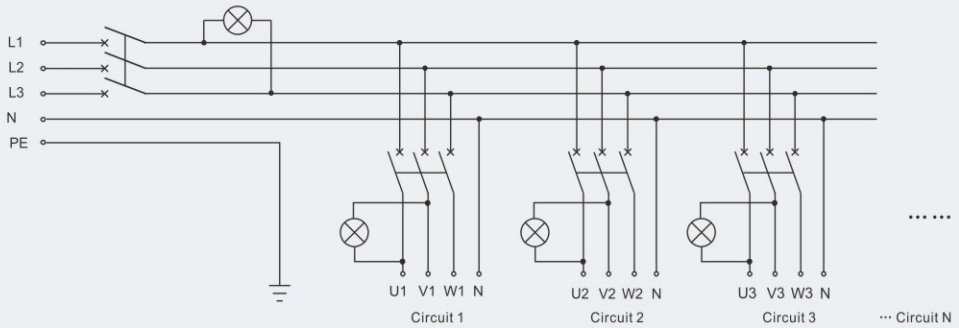

BXD53 Series explosion-proof power distribution boxes

Distribution Boxes
BXD53 Series Explosion-proof Power Distribution Boxes (Ex db eb IIC)

Selection table of BXD53 series explosion-proof power distribution boxes

Version	Description					Cable entries
	Main switch	Number of branch circuit	Branch switch	Branch current	Number of indicator	
BXD53-4/□/K/□	MCB or MCCB Current: max. 200A	4	MCB 3P	1A 2A 4A 6A 10A 16A 20A 25A 32A 40A 50A 63A On request	1+4	1 x M50 x 1.5 + 4 x M25 x 1.5
BXD53-6/□/K/□		6			1+6	1 x M50 x 1.5 + 6 x M25 x 1.5
BXD53-8/□/K/□		8			1+8	1 x M50 x 1.5 + 8 x M25 x 1.5
BXD53-10/□/K/□		10			1+10	1 x M50 x 1.5 + 10 x M25 x 1.5
BXD53-12/□/K/□		12			1+12	1 x M50 x 1.5 + 12 x M25 x 1.5
BXD53-4/□	—	4	MCB 3P	1A 2A 4A 6A 10A 16A 20A 25A 32A 40A 50A 63A On request	4	1 x M50 x 1.5 + 4 x M25 x 1.5
BXD53-6/□		6			6	1 x M50 x 1.5 + 6 x M25 x 1.5
BXD53-8/□		8			8	1 x M50 x 1.5 + 8 x M25 x 1.5
BXD53-10/□		10			10	1 x M50 x 1.5 + 10 x M25 x 1.5
BXD53-12/□		12			12	1 x M50 x 1.5 + 12 x M25 x 1.5

Note

1. Please specify the number and size of cable entries and sides of the enclosure to be fitted.
2. Electrical schematic diagram shall be provided by user. Photo switch, AC contactor, thermal relay or others on request.
3. Please specify mounting type when ordering.
4. Rainproof canopy on request.

Dimension drawings (all dimensions in mm) - subject to alteration

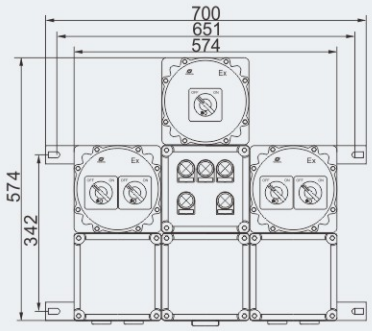

BXM(D)53-4/□/K/□

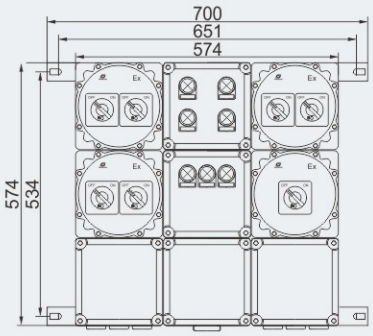

BXM(D)53-6/□/K/□

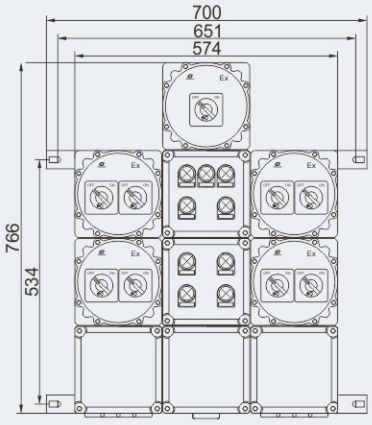

BXM(D)53-8/□/K/□

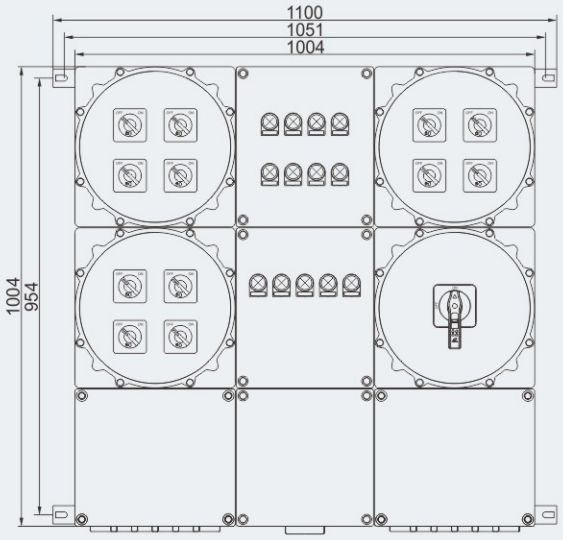

BXM(D)53-12/□/K/□

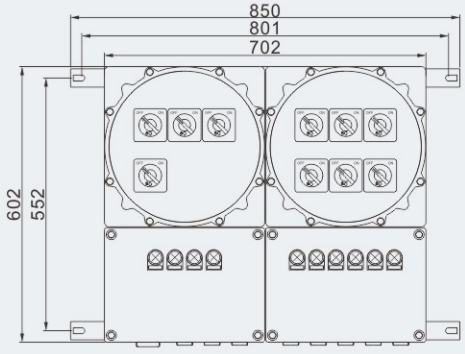

BXM(D)53-8/□/K/□
(with electrical surge protection device)

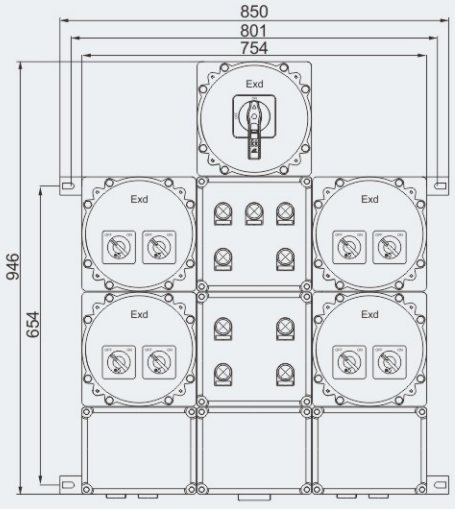

BXM(D)53-4/□/K/□
(magnetic force)

Distribution Boxes
HRMD91 Series Explosion-proof Distribution Panels



- Explosion protection to
  -CENELEC
  -IEC
  -NEC
- Can be used in
  Zone 1 and Zone 2
  Zone 21 and Zone 22
  Class I, Zone 1 and Zone 2
  Class I, Division 1, Groups B, C, D
- Flameproof enclosure (Ex d IIB+H2), which can be used as feed distribution equipment in control and distribution system(such as distribution box, switch box of main circuit ,control box, terminal box or motor starting box etc.)
- Copper-free Aluminium Alloy enclosure, powder coated surface.
- Equipped with specialized hinge structure, which can prevent the flameproof joints from damage when opening and closing the panels, and greatly prolong the service life of box.
- The boxes can be combined and installed freely to save space and meet the requirements of various distribution systems.
- Special requirements on request.

Catalogue number logic

HRMD 91 - □/□/□

- Rated current (A)
- Rated voltage (V)
- Specification code(I,II,IIB.....)
- Design No.
- Explosion-proof Distribution Panels

WAROM

Zones1& 2; 21& 22

Technical data

Explosion-proof Distribution Panels HRMD91-□/□/□

Explosion protection	
Global (IECEx)	IECEx CML 18.0157X
Gas and dust	Ex db IIB+H_2 T□[1] Gb Ex db [ib] IIB+H_2 T□[1] Gb Ex tb IIIC T□[1] Db IP66
Europe (ATEX)	CML 18 ATEX 1338X
Gas and dust	Ⓔx II 2 G Ex db IIB+H_2 T□[1] Gb Ⓔx II 2 G Ex db [ib] IIB+H_2 T□[1] Gb Ⓔx II 2 D Ex tb IIIC T□[1] Db IP66
	[1]See Selection table, P6/16-17
Certificates	IECEx; ATEX; CUTR
Conformity to standards	EN 60079-0, EN 60079-1, EN 60079-11, EN 60079-31 IEC 60079-0, IEC 60079-1, IEC 60079-11, IEC 60079-31
Enclosure material	Copper-free Aluminium Alloy enclosure, powder coated surface, window grey (RAL7040)
Exposed fastener	Stainless steel
Built-in components	Ammeters voltmeters, power meters, tachometers temperature control meters and other meters, control switches, disconnecting switches, Moulded Case Circuit Breakers (MCCB), Miniature Circuit Breakers(MCB), AC contactors, thermal relays, intermediate relays, time relays, control transformers, DC power supplies, current transformers, surge protectors, PLCs, fuses, soft starters, frequency converters, terminals, bus bars, resistors, light-operated switches, time controllers, optical fiber control boxes, magnet valves, analytical instruments, heaters, self-regulation trace heating cables, display screens, magnetic ballasts of HID light sources, electronic ballasts of fluorescent lamps, drivers of LED light sources, emergency devices of HID light sources, emergency devices of fluorescent lamps, emergency devices of LED light sources, safety barriers, integrated protectors of motors, lighting building controllers, lighting energy saving controllers, fire monitoring controllers, temperature controllers, humidity controllers, current monitors, voltage monitors, motor protection switches, dual power transfer switches, counters, timers, solid state relays, diode modules, industrial personal computers, UPS, batteries.
Rated voltage	Max. 1000V AC 50/60Hz Max. 1500V DC
Rated current	Max. 1200A
Degree of protection	IP66
Internal&external earthing	M6/M8, M8/M8
Ambient temperature	-60℃~+60℃(+40℃)
Cable entries	Standard M□ x 1.5 plug (the size of entry hole should be processed in accordance with actual requirements), NPT □ plug on request.
Cable gland (optional)	DQM-II (Ex d) or DQM-III (Ex d) is recommended. Please see P7/22~31.
Entry direction	Bottom
Mounting	Surface type (standard) Pedestal type (optional)

Distribution Boxes
HRMD91 Series Explosion-proof Distribution Panels

See table for max. dissipated power

Ta=60℃	HRMD91 with metal cover without glass					
	T4(T130℃)		T5(T95℃)		T6(T80℃)	
Type	Power (W)	T Rise (K)	Power (W)	T Rise (K)	Power (W)	T Rise (K)
HRMD91-I	200	70	80	33	38	17
HRMD91-II	200	65	80	31	40	17
HRMD91-IIB	240	67	100	31	50	17
HRMD91-III	290	66	130	32	60	17
HRMD91-IIIB	350	67	140	32	75	17
HRMD91-IV	420	62	190	33	100	17
HRMD91-IVB	500	65	210	34	100	17
HRMD91-V	520	60	240	31	125	17
HRMD91-VB	620	61	280	31	140	17
HRMD91-VI	660	61	300	31	150	17
HRMD91-VIB	660	53	330	31	180	17
HRMD91-VII	700	50	400	28	210	17
HRMD91-VIIB	700	49	400	27	220	17

Ta=60℃	HRMD91 with metal cover with glass					
	T4(T130℃)		T5(T95℃)		T6(T80℃)	
Type	Power (W)	T Rise (K)	Power (W)	T Rise (K)	Power (W)	T Rise (K)
HRMD91-I	170	69	70	33	38	17
HRMD91-II	170	69	70	33	38	17
HRMD91-IIB	200	69	80	33	38	17
HRMD91-III	260	66	110	33	55	17
HRMD91-IIIB	320	67	120	31	65	17
HRMD91-IV	380	69	160	35	72	17
HRMD91-IVB	425	68	170	34	81	17
HRMD91-V	450	66	200	34	90	17
HRMD91-VB	540	66	220	34	100	17
HRMD91-VI	620	70	260	34	140	17
HRMD91-VIB	660	58	330	34	170	17
HRMD91-VII	700	56	400	32	185	17
HRMD91-VIIB	700	56	400	32	190	17

Ta=40℃	HRMD91 with full metal cover without glass					
	T4(T130℃)		T5(T95℃)		T6(T80℃)	
Type	Power (W)	T Rise (K)	Power (W)	T Rise (K)	Power (W)	T Rise (K)
HRMD91-I	240	85	150	54	90	37
HRMD91-II	250	84	150	54	90	37
HRMD91-IIB	300	85	170	54	110	37
HRMD91-III	360	84	210	54	140	37
HRMD91-IIIB	430	83	230	54	190	37
HRMD91-IV	550	82	310	54	210	37
HRMD91-IVB	640	84	330	54	220	37
HRMD91-V	710	83	410	54	270	37
HRMD91-VB	830	82	480	54	300	37
HRMD91-VI	870	81	520	54	320	37
HRMD91-VIB	980	79	570	54	390	37
HRMD91-VII	1100	79	770	54	460	37
HRMD91-VIIB	1100	77	800	54	480	37

Distribution Boxes
HRMD91 Series Explosion-proof Distribution Panels

Ta=40℃	HRMD91 with full metal cover with glass					
	T4(T130℃)		T5(T95℃)		T6(T80℃)	
Type	Power (W)	T Rise (K)	Power (W)	T Rise (K)	Power (W)	T Rise (K)
HRMD91-I	220	85	120	53	80	37
HRMD91-II	220	84	120	53	80	37
HRMD91-IIB	240	79	140	53	90	37
HRMD91-III	330	85	180	54	120	37
HRMD91-IIIB	400	84	200	53	140	37
HRMD91-IV	450	83	240	53	170	37
HRMD91-IVB	510	82	260	53	180	37
HRMD91-V	550	81	310	53	210	37
HRMD91-VB	610	80	350	53	240	37
HRMD91-VI	700	79	400	53	310	37
HRMD91-VIB	888	78	510	53	370	37
HRMD91-VII	970	78	650	53	450	37
HRMD91-VIIB	975	78	660	53	460	37

Dimension drawings (all dimensions in mm) - subject to alteration

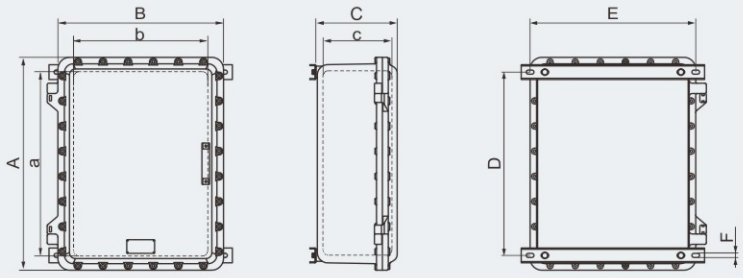

Version	External dimension			Internal dimension			Mounting dimension			Weight of enclosure (kg)
	A	B	C	a	b	c	D	E	F	
HRMD91-I	250	200	170	192	142	131	180	200	10	6.70
HRMD91-II	300	200	170	242	142	131	230	200	10	8.00
HRMD91-IIB	350	200	170	292	142	131	280	200	10	9.50
HRMD91-III	350	300	200	290	240	159	280	300	12	14.50
HRMD91-IIIB	350	300	270	290	240	229	280	300	12	17.50
HRMD91-IV	450	350	210	378	278	163	365	350	12	23.00
HRMD91-IVB	450	350	280	378	278	233	365	350	12	27.50
HRMD91-V	560	400	210	488	328	155	475	400	14	34.50
HRMD91-VB	560	400	280	488	328	225	475	400	14	39.50
HRMD91-VI	634	434	265	560	360	205	522	430	14	46.00
HRMD91-VIB	634	434	335	560	360	275	522	430	14	52.00
HRMD91-VII	720	560	275	640	480	215	620	560	14	74.50
HRMD91-VIIB	720	560	345	640	480	285	620	560	14	83.00

Note: For cable entries:
1). Please specify the direction and size of each cable entry.
2). Cable gland is optional, DQM-II (Ex d) or DQM-III (Ex d) is recommended, please see P7/22~31.

HRMD91 Explosion-proof distribution panels for terminal box use

Suitable for terminal boxes of distribution system

Note: 1. HRMD91 terminal boxes have various different terminal arrangement methods.

2. It can be customized in accordance with user's requirements and conforms to the usage limits of conformity certificate. The Max. number of terminals and the Max. number of holes on side can meet the requirements of dissipated power and enclosure mechanical strength.

3. This table is only for reference.

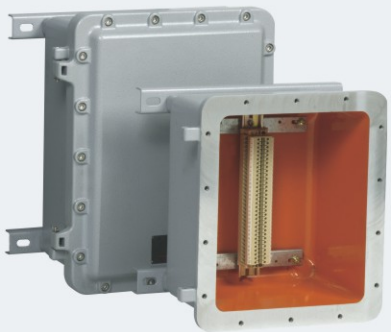

HRMD91 Explosion-proof distribution panels for distribution box use

Suitable for power units of distribution system

Note: 1. MCB (Miniature Circuit Breaker) or MCCB (Moulded Case Circuit Breaker), AC contactor, thermal overload relay, PLC programmer, soft starter, HA pushbuttons, HD indicators, HK control switches and BB8050 explosion-proof ammeters/ voltmeters etc. in HRMD91 distribution boxes.

2. HRMD91 power unit can be used for distribution or on-off of circuit. It also can be used for controlling the start, stop, corotation and inversion of motor and provide comprehensive protection for motor. It can be equipped with two-site control or multi-site control.

3. It can be customized in accordance with user's requirements and conforms to the usage limits of conformity certificate. The number of cover components and the Max. number of holes on side can meet the requirements of dissipated power and enclosure mechanical strength.



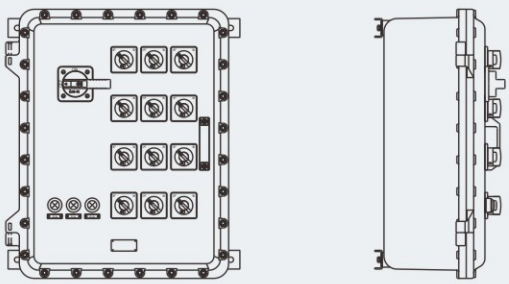

HRMD91 Explosion-proof Distribution panels for control box use

Suitable for control unit of distribution system

Note: 1. HA pushbuttons, HD indicators, HK control switches and BB8050 explosion-proof ammeters/voltmeters etc.in HRMD91 control boxes.

2. HRMD91 control box can be used for on-off operation of circuit. It also can realize the remote control or local control of the start, stop, corotation and inversion of motor. When it is equipped with ammeter, it also can monitor the running of motor and circuit status.

3. It can be customized in accordance with user's requirements and conforms to the usage limits of conformity certificate. The number of cover components and the Max. number of holes on side can meet the requirements of dissipated power and enclosure mechanical strength.



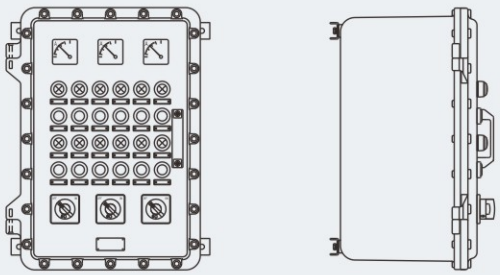

Typical scheme diagram

Enclosure type	Components arrangement
HRMD91-I	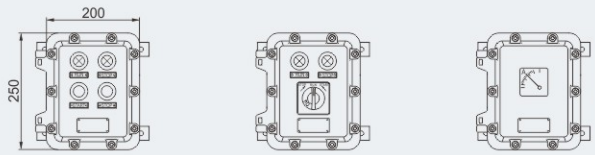
HRMD91-II	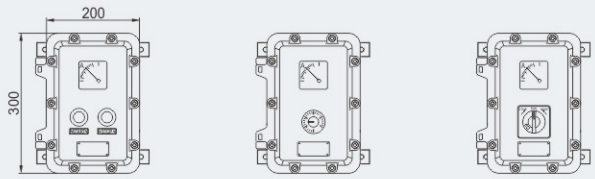
HRMD91-IIB	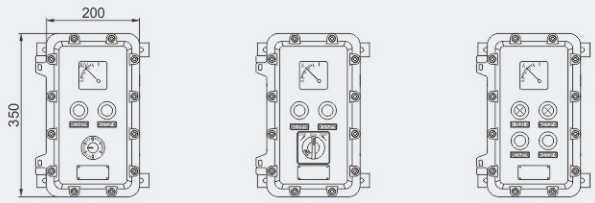

Distribution Boxes
HRMD91 Series Explosion-proof Distribution Panels

Typical scheme diagram

Enclosure type	Components arrangement
HRMD91-III	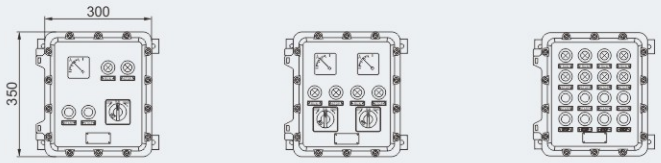
HRMD91-IIIB	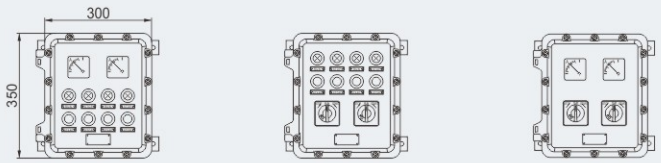
HRMD91-IV	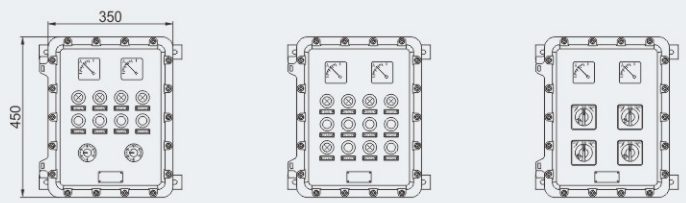
HRMD91-IVB	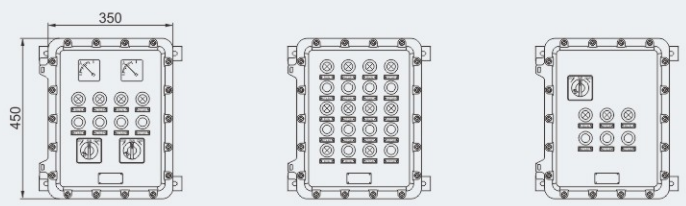
HRMD91-V	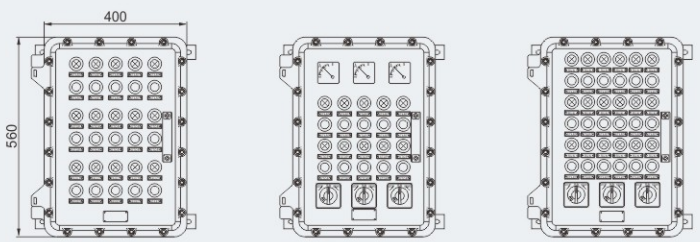

Typical scheme diagram

Enclosure type	Components arrangement
HRMD91-VB	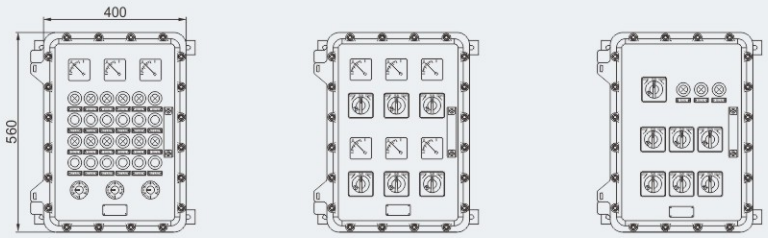
HRMD91-VI	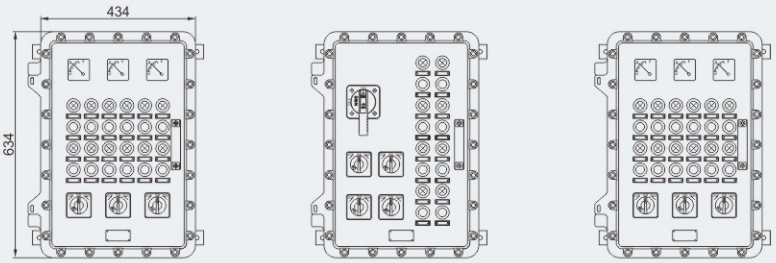
HRMD91-VIB	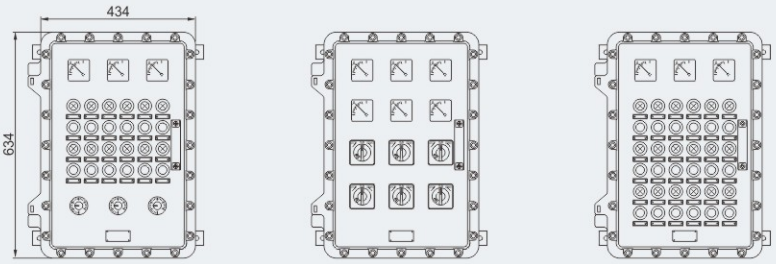
HRMD91-VII	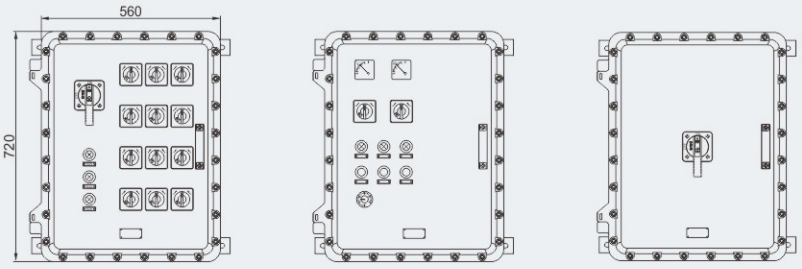
HRMD91-VIIB	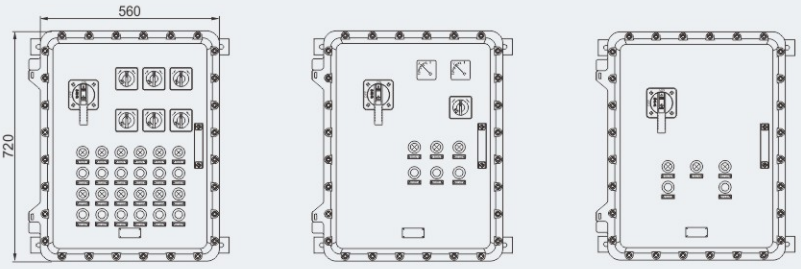

Distribution Boxes
HRMD92 Series Explosion-proof Distribution Panels

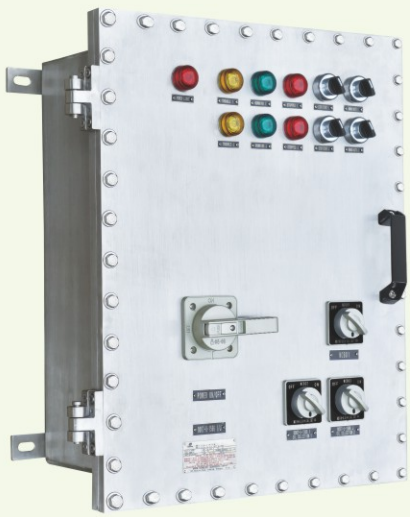

- Explosion protection to
  -CENELEC
  -IEC
  -NEC
- Can be used in
  Zone 1 and Zone 2
  Zone 21 and Zone 22
  Class I, Zone 1 and Zone 2
  Class I, Division 1, Groups B, C, D
- Flameproof enclosure (Ex d IIB+H2), which can be used as feed distribution equipment in control and distribution system (such as distribution box, switch box of main circuit ,control box, terminal box or motor starting box etc.)
- Enclosure: stainless steel.
- Equipped with specialized hinge structure, which can prevent the flameproof joints from damage when opening and closing the panels, and greatly prolong the service life of box.
- The boxes can be combined and installed freely to save space and meet the requirements of various distribution systems.
- Special requirements on request.

Catalogue number logic

HRMD 92 - □/□/□

- Rated current (A)
- Rated voltage (V)
- Specification code(I,II,IIB.....)
- Design No.
- Explosion-proof Distribution Panels

WAROM

Zones1& 2; 21& 22

Technical data

Explosion-proof Distribution Panels HRMD92-□/□/□

Explosion protection	
Global (IECEx)	IECEx CML19.0176X
Gas and dust	Where the Spec. type is: I, II, IIB ... VIIB Ex db IIB+H_2 T□[1)] Gb Ex db [ib] IIB+H_2 T□[1)] Gb Ex tb IIIC T□[1)] Db IP66 Where the Spec. type is: VIII, VIIIB, IX, IXB Ex db IIB T□[1)] Gb Ex db [ib] IIB T□[1)] Gb Ex tb IIIC T□[1)] Db IP66
Europe (ATEX)	CML 19 ATEX 1482X
Gas and dust	Where the Spec. type is: I, II, IIB ... VIIB Ⓔx II 2 G Ex db IIB+H_2 T□[1)] Gb Ⓔx II 2 G Ex db [ib] IIB+H_2 T□[1)] Gb Ⓔx II 2 D Ex tb IIIC T□[1)] Db IP66 Where the Spec. type is: VIII, VIIIB, IX, IXB Ⓔx II 2 G Ex db IIB T□[1)] Gb Ⓔx II 2 G Ex db [ib] IIB T□[1)] Gb Ⓔx II 2 D Ex tb IIIC T□[1)] Db IP66 [1)]See Selection table, P6/24-25
Certificates	IECEx; ATEX; CU-TR
Conformity to standards	EN 60079-0, EN 60079-1, EN 60079-11, EN 60079-31 IEC 60079-0, IEC 60079-1, IEC 60079-11, IEC 60079-31
Enclosure material	Stainless steel.
Exposed fastener	Stainless steel
Built-in components	Ammeters voltmeters, power meters, tachometers temperature control meters and other meters, control switches, disconnecting switches, Moulded Case Circuit Breakers (MCCB), Miniature Circuit Breakers(MCB), AC contactors, thermal relays, intermediate relays, time relays, control transformers, DC power supplies, current transformers, surge protectors, PLCs, fuses, soft starters, frequency converters, terminals, bus bars, resistors, light-operated switches, time controllers, optical fiber control boxes, magnet valves, analytical instruments, heaters, self-regulation trace heating cables, display screens, magnetic ballasts of HID light sources, electronic ballasts of fluorescent lamps, drivers of LED light sources, emergency devices of HID light sources, emergency devices of fluorescent lamps, emergency devices of LED light sources, safety barriers, integrated protectors of motors, lighting building controllers, lighting energy saving controllers, fire monitoring controllers, temperature controllers, humidity controllers, current monitors, voltage monitors, motor protection switches, dual power transfer switches, counters, timers, solid state relays, diode modules, industrial personal computers, UPS, batteries.
Rated voltage	Max. 1000V AC 50/60Hz Max. 1500V DC
Rated current	Max. 2000A
Degree of protection	IP66
Ambient temperature	-60℃~+60℃(+40℃)
Cable entries	Standard M□ x 1.5 plug (the size of entry hole should be processed in accordance with actual requirements), NPT □ plug on request.
Cable gland (optional)	DQM-II (Ex d) or DQM-III (Ex d) is recommended. Please see P7/22~31.
Entry direction	Bottom
Mounting	Surface type (standard) Pedestal type (optional)

Selection table for max. dissipated power

Ta=60℃	HRMD92 with full metal cover without glass					
	T4(T130℃)		T5(T95℃)		T6(T80℃)	
Type	Power (W)	T Rise (K)	Power (W)	T Rise (K)	Power (W)	T Rise (K)
HRMD92-I	101	70	51	35	22	17
HRMD92-II	101	70	51	35	25	17
HRMD92-IIB	101	70	51	35	25	17
HRMD92-III	145	70	73	35	31	17
HRMD92-IIIB	168	70	84	35	41	17
HRMD92-IV	148	70	74	35	36	17
HRMD92-IVB	188	70	94	35	46	17
HRMD92-V	190	70	95	35	40	17
HRMD92-VB	239	70	119	35	56	17
HRMD92-VI	279	70	139	35	55	17
HRMD92-VIB	288	70	144	35	70	17
HRMD92-VII	279	70	139	35	55	17
HRMD92-VIIB	299	70	149	35	72	17
HRMD92-VIII	686	70	343	35	167	17
HRMD92-VIIIB	743	70	371	35	180	17
HRMD92-IX	975	70	488	35	237	17
HRMD92-IXB	1149	70	575	35	279	17

Ta=60℃	HRMD92 with metal cover with glass					
	T4(T130℃)		T5(T95℃)		T6(T80℃)	
Type	Power (W)	T Rise (K)	Power (W)	T Rise (K)	Power (W)	T Rise (K)
HRMD92-I	101	70	51	35	19	17
HRMD92-II	101	70	51	35	20	17
HRMD92-IIB	129	70	65	35	26	17
HRMD92-III	150	70	75	35	31	17
HRMD92-IIIB	155	70	77	35	38	17
HRMD92-IV	215	70	108	35	38	17
HRMD92-IVB	224	70	112	35	49	17
HRMD92-V	187	70	93	35	37	17
HRMD92-VB	251	70	125	35	61	17
HRMD92-VI	266	70	133	35	71	17
HRMD92-VIB	319	70	160	35	79	17
HRMD92-VII	290	70	145	35	71	17
HRMD92-VIIB	313	70	157	35	76	17
HRMD92-VIII	709	70	354	35	172	17
HRMD92-VIIIB	780	70	390	35	189	17
HRMD92-IX	953	70	476	35	231	17
HRMD92-IXB	1206	70	603	35	293	17

Ta=40℃	HRMD92 with metal cover without glass					
	T4(T130℃)		T5(T95℃)		T6(T80℃)	
Type	Power (W)	T Rise (K)	Power (W)	T Rise (K)	Power (W)	T Rise (K)
HRMD92-I	130	90	79	55	43	37
HRMD92-II	130	90	79	55	53	37
HRMD92-IIB	130	90	79	55	53	37
HRMD92-III	187	90	114	55	61	37
HRMD92-IIIB	216	90	132	55	89	37
HRMD92-IV	190	90	116	55	89	37
HRMD92-IVB	242	90	148	55	99	37
HRMD92-V	244	90	149	55	78	37
HRMD92-VB	307	90	188	55	111	37
HRMD92-VI	358	90	219	55	147	37
HRMD92-VIB	371	90	226	55	152	37
HRMD92-VII	358	90	219	55	108	37
HRMD92-VIIB	384	90	235	55	158	37
HRMD92-VIII	882	90	539	55	362	37
HRMD92-VIIIB	955	90	584	55	393	37
HRMD92-IX	1254	90	766	55	515	37
HRMD92-IXB	1478	90	903	55	607	37

Ta=40℃	HRMD92 with full metal cover with glass					
	T4(T130℃)		T5(T95℃)		T6(T80℃)	
Type	Power (W)	T Rise (K)	Power (W)	T Rise (K)	Power (W)	T Rise (K)
HRMD92-I	130	90	79	55	19	37
HRMD92-II	130	90	79	55	20	37
HRMD92-IIB	166	90	101	55	26	37
HRMD92-III	193	90	118	55	31	37
HRMD92-IIIB	199	90	122	55	38	37
HRMD92-IV	277	90	169	55	38	37
HRMD92-IVB	288	90	176	55	49	37
HRMD92-V	240	90	147	55	37	37
HRMD92-VB	322	90	197	55	61	37
HRMD92-VI	342	90	209	55	71	37
HRMD92-VIB	411	90	251	55	79	37
HRMD92-VII	373	90	228	55	71	37
HRMD92-VIIB	403	90	246	55	76	37
HRMD92-VIII	911	90	557	55	172	37
HRMD92-VIIIB	1003	90	613	55	189	37
HRMD92-IX	1225	90	749	55	231	37
HRMD92-IXB	1551	90	948	55	293	37

Dimension drawings (all dimensions in mm) - subject to alteration

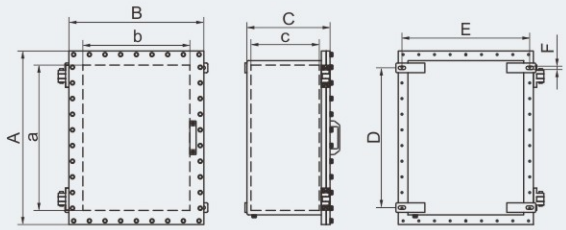

HRMD92-I/□/□ ~ HRMD92-VIIB/□/□

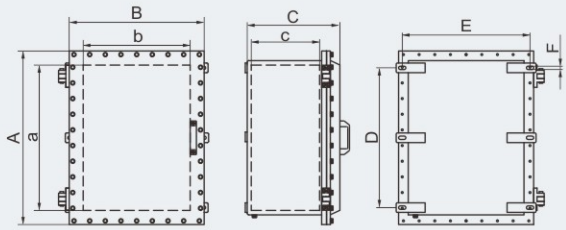

HRMD92-VIII/□/□ ~ HRMD92-IXB/□/□

Version	External dimension			Internal dimension			Mounting dimension			Weight of enclosure (kg)
	A	B	C	a	b	c	D	E	F	
HRMD92-I	250	200	170	192	142	135	150	180	9	15.30
HRMD92-II	300	200	170	242	142	135	200	180	10	17.70
HRMD92-IIB	350	200	170	292	142	163	250	180	10	20.10
HRMD92-III	350	300	200	292	242	168	250	290	10	28.70
HRMD92-IIIB	350	300	270	292	242	238	250	290	10	31.80
HRMD92-IV	450	350	210	362	262	163	330	318	10	44.80
HRMD92-IVB	450	350	280	362	262	233	330	318	10	49.40
HRMD92-V	560	400	210	468	308	163	420	370	14	68.30
HRMD92-VB	560	400	280	468	308	225	420	370	14	73.80
HRMD92-VI	634	434	265	542	342	218	494	404	14	103.50
HRMD92-VIB	634	434	335	542	342	319	494	404	14	112.80
HRMD92-VII	720	560	275	628	468	228	580	530	14	156.10
HRMD92-VIIB	720	560	345	628	468	298	580	530	14	169.30
HRMD92-VIII	980	720	325	884	624	272	840	690	14	329.40
HRMD92-VIIIB	980	720	425	884	624	372	840	690	14	354.90
HRMD92-IX	1280	900	350	1184	804	297	1140	870	14	589.80
HRMD92-IXB	1280	900	500	1184	804	447	1140	870	14	655.90

Note: For cable entries:
1). Please specify the direction and size of each cable entry.
2). Cable gland is optional, DQM-II (Ex d) or DQM-III (Ex d) is recommended, please see P7/22~31.

HRMD92 Explosion-proof distribution panels for terminal box use

Suitable for terminal boxes of distribution system

Note: 1. HRMD92 terminal boxes have various different terminal arrangement methods.
2. It can be customized in accordance with user's requirements and conforms to the usage limits of conformity certificate.
The Max. number of terminals and the Max. number of holes on side can meet the requirements of dissipated power and enclosure mechanical strength.
3. This table is only for reference.



HRMD92 Explosion-proof Distribution Panels for control box use

Suitable for control unit of distribution system

Note: 1. HA pushbuttons, HD indicators, HK control switches and BB8050 explosion-proof ammeters/voltmeters etc.in HRMD92 control boxes.
2. HRMD92 control box can be used for on-off operation of circuit. It also can realize the remote control or local control of the start, stop, corotation and inversion of motor. When it is equipped with ammeter, it also can monitor the running of motor and circuit status.
3. It can be customized in accordance with user's requirements and conforms to the usage limits of conformity certificate. The number of cover components and the Max. number of holes on side can meet the requirements of dissipated power and enclosure mechanical strength.

Example diagram for control box use



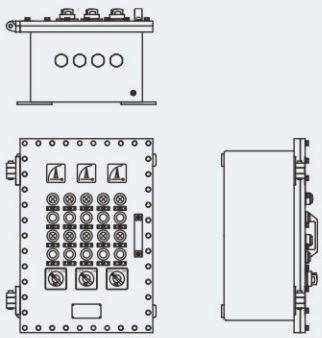

HRMD92 Explosion-proof distribution panels for distribution box use

Suitable for power units of distribution system

Note: 1. MCB (Miniature Circuit Breaker) or MCCB (Moulded Case Circuit Breaker), AC contactor, thermal overload relay, PLC programmer, soft starter, HA pushbuttons, HD indicators, HK control switches and BB8050 explosion-proof ammeters/ voltmeters etc. in HRMD92 distribution boxes.

2. HRMD92 power unit can be used for distribution or on-off of circuit. It also can be used for controlling the start, stop, corotation and inversion of motor and provide comprehensive protection for motor. It can be equipped with two-site control or multi-site control.
3. It can be customized in accordance with user's requirements and conforms to the usage limits of conformity certificate. The number of cover components and the Max. number of holes on side can meet the requirements of dissipated power and enclosure mechanical strength.

Example diagram for distribution box use

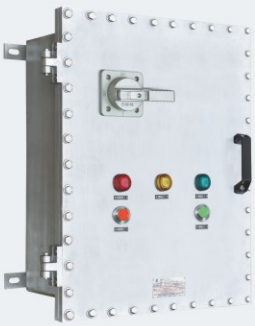

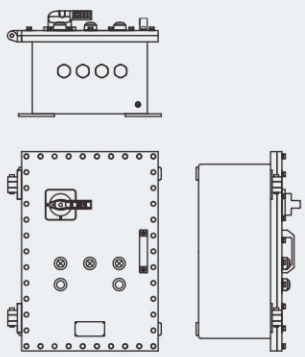

Use for motor starting

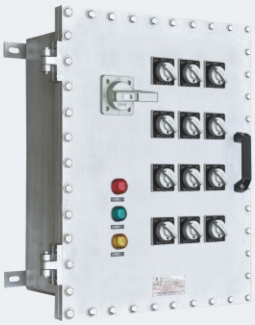

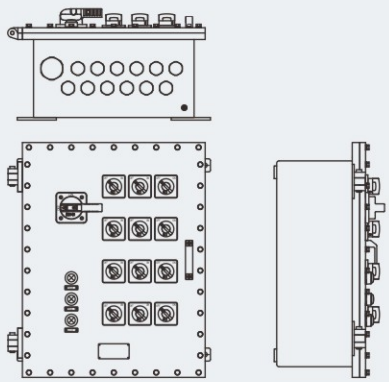

Use for illumination (power) distribution

Typical scheme diagram

Enclosure type	Components arrangement
HRMD92-I	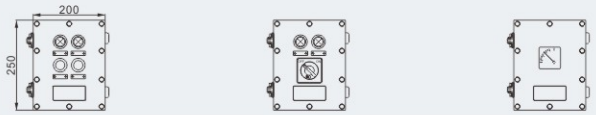
HRMD92-II	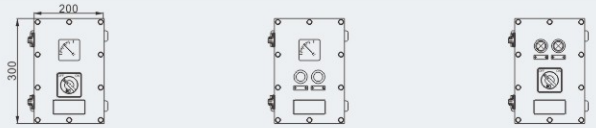
HRMD92-IIB	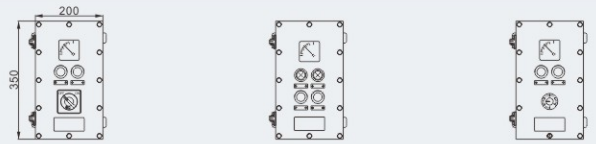
HRMD92-III	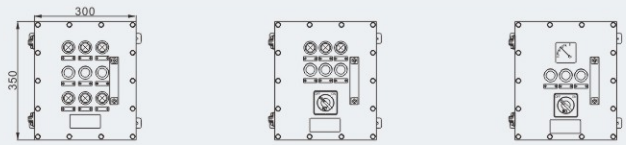
HRMD92-IIIB	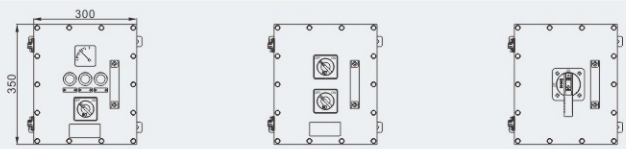
HRMD92-IV	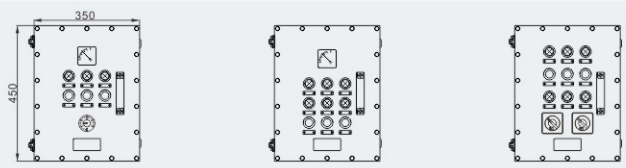
HRMD9-IVB	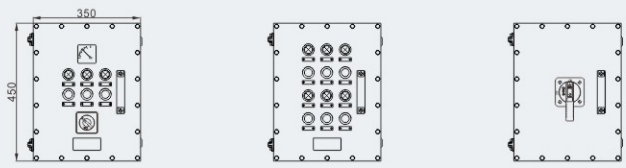
HRMD92-V	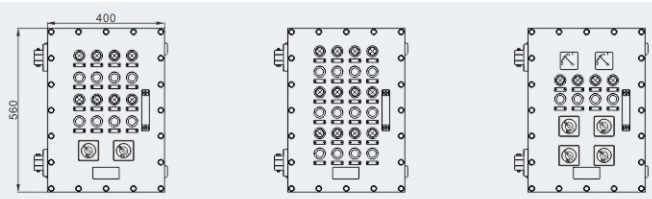
HRMD92-VB	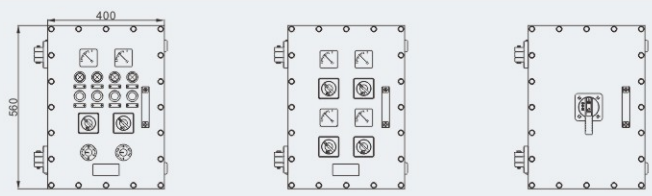
HRMD92-VI	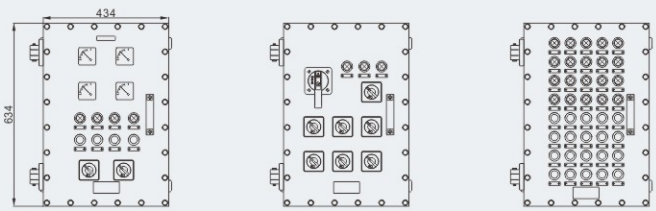

Typical scheme diagram

Enclosure type	Components arrangement
HRMD92-VIB	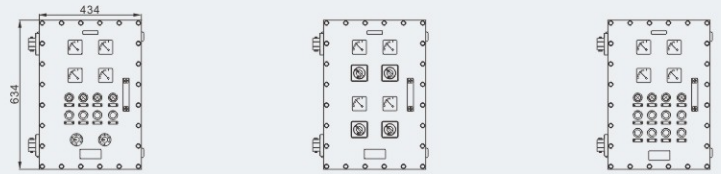
HRMD92-VII	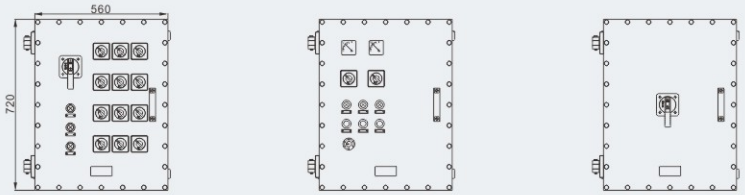
HRMD92-VIIB	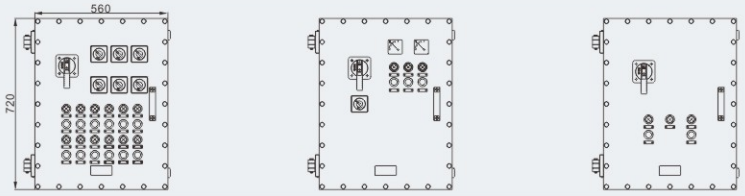
HRMD92-VIII	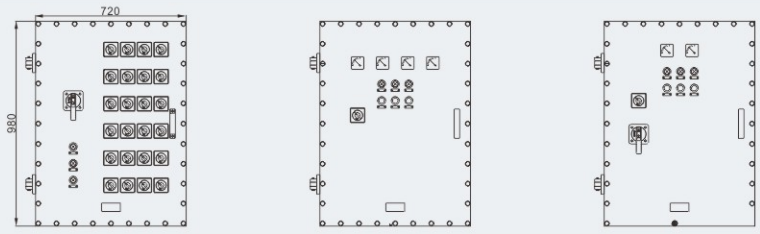
HRMD92-VIIIB	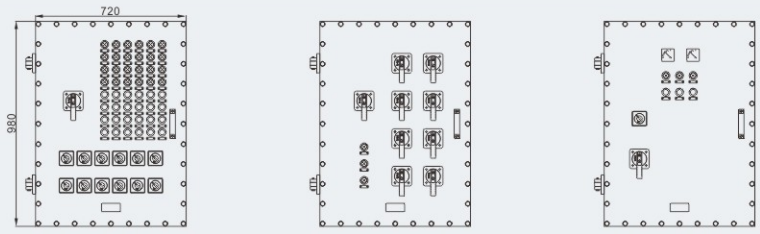
HRMD92-IX	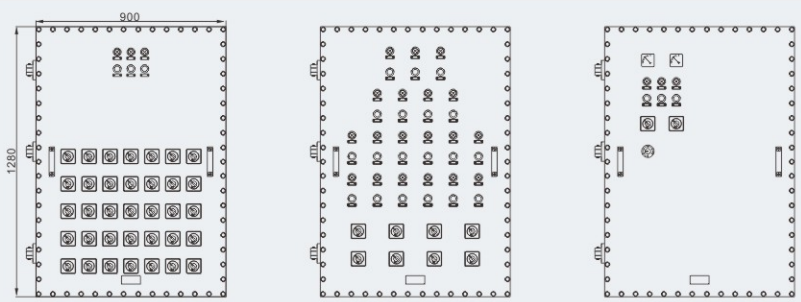
HRMD92-IXB	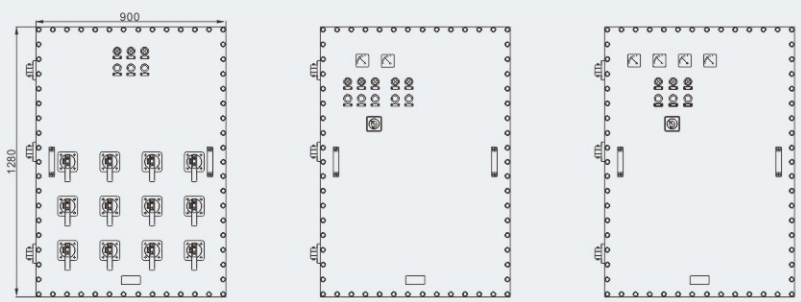

Distribution Boxes
HRMD93 Series Explosion-proof Distribution Panels

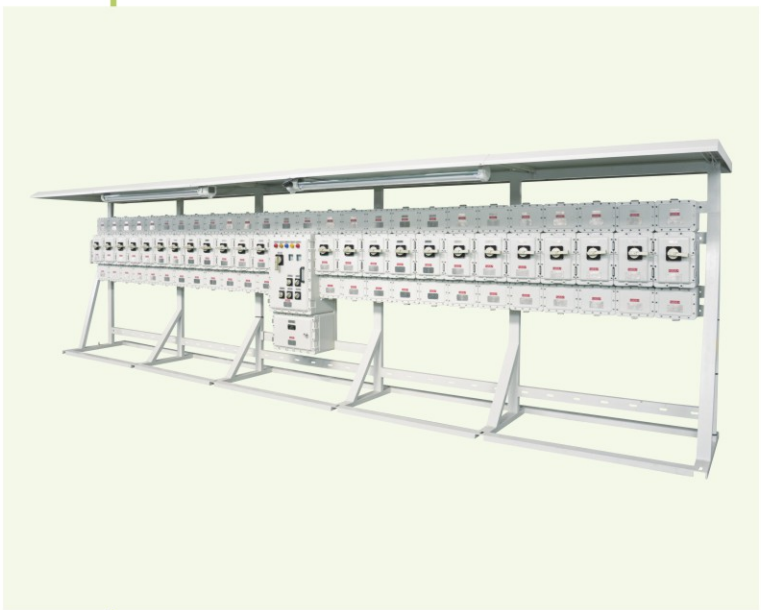

- Explosion protection to
  - -CENELEC
  - -IEC
  - -NEC
- Can be used in
  - Zone 1 and Zone 2
  - Zone 21 and Zone 22
  - Class I, Zone 1 and Zone 2
  - Class I, Division 2, Groups A, B, C, D
- Main switch and branch switch are operated with external rotary actuator.
- Internal wiring to the terminal is finished.
- International brand of explosion-proof terminal blocks.
- Copper-free Aluminium Alloy, powder coated surface.
- Entries plugged. Cable glands on request (see P7/19~31).
- Special requirements on request.

Catalogue number logic

HRMD 93- □/□/□/□/□

- Rated current (A)
- Rated voltage (V)
- Plan No. (001, 002...)
  - I: (001, 002 ... 007)
  - II: (001, 002 ... 009)
  - III: (001, 002 ... 009)
  - IV: (001, 002 ... 019)
  - A/V: (001, 002 ... 050)
  - B/V: (001, 002 ... 044)
- Case type
  - I: I single case
  - II: II single case
  - III: III single case
  - IV: IV single case
  - V: matching case
- Ex type
  - A: Flameproof IIB
  - B: Explosion-proof IIB+H_2
- Design No.
- Ex distribution panel

Zones1& 2; 21& 22

Technical data

Explosion-proof distribution panels HRMD93-□/□/□/□

Explosion protection	
Global (IECEx)	IECEx PCET 22.0011X
Gas and dust	Ambient temperature range: -60℃≤Ta≤+40(+60℃) Ex db IIB T6...T4 Gb Ex db IIB+H_2 T6...T4 Gb Ex tb IIIC T80℃...T130℃ Db Ambient temperature range: -40℃≤Ta≤+40(+60℃) Ex db [ia Ga] IIB T6...T4 Gb Ex db [ib Gb] IIB T6...T4 Gb Ex db [ia Ga] IIB+H_2 T6...T4 Gb Ex db [ib Gb] IIB+H_2 T6...T4 Gb Ex tb IIIC T80℃...T130℃ Db
Europe (ATEX)	TPS 23 ATEX 089761 0029 X
Gas and dust	Ambient temperature range: -60℃≤Ta≤+40(+60℃) Ⓔx II 2 G Ex db IIB T6...T4 Gb Ⓔx II 2 G Ex db IIB+H_2 T6...T4 Gb Ⓔx II 2 D Ex tb IIIC T80℃...T130℃ Db Ambient temperature range: -40℃≤Ta≤+40(+60℃) Ⓔx II 2 G Ex db [ia Ga] IIB T6...T4 Gb Ⓔx II 2 G Ex db [ib Gb] IIB T6...T4 Gb Ⓔx II 2 G Ex db [ia Ga] IIB+H_2 T6...T4 Gb Ⓔx II 2 G Ex db [ib Gb] IIB+H_2 T6...T4 Gb Ⓔx II 2 D Ex tb IIIC T80℃...T130℃ Db
Certificates	IECEx; ATEX; CU-TR
Conformity to standards	EN 60079-0, EN 60079-1, EN 60079-11, EN 60079-31 IEC 60079-0, IEC 60079-1, IEC 60079-11, IEC 60079-31
Rated voltage	Low voltage: MAX. 1000V AC 50/60Hz; MAX. 1500V DC High voltage: 6kV, 10kV, 24kV, 35kV AC 50/60Hz
Rated current	Max. 2000A
Exposed fastener	Stainless steel
Enclosure material	Copper-free Aluminium Alloy, powder coated surface
Enclosure colour	Window grey (RAL7040)
Built-in components	
Main switch	MCB (miniature circuit breaker) or MCCB (moulded case circuit breaker) Note: earth leakage protection on request
Branch switch	MCB (miniature circuit breaker) or MCCB (moulded case circuit breaker) Note: earth leakage protection on request
Terminal	International brand of terminal blocks
Indicator	Red, green, yellow
Degree of protection	IP66
Internal&external earthing	M6/M8, M8/M8
Ambient temperature	-40℃≤Ta≤+40(+60℃), -60℃≤Ta≤+40(+60℃)
Cable entries	Standard M□ x 1.5 plug (the size of entry hole should be processed in accordance with actual requirements), NPT □ plug on request.
Cable gland (optional)	DQM-II (Ex d) or DQM-III (Ex d) is recommended. Please see P7/22~31
Entry direction	Bottom
Mounting	Surface type (standard) Pedestal type (optional)

Form of maximum power dissipation and temperature rise

Ta=60℃	HRMD93 with full metal cover without glass window					
	T4(T130℃)		T5(T95℃)		T6(T80℃)	
Type	Power (W)	T Rise (K)	Power (W)	T Rise (K)	Power (W)	T Rise (K)
HRMD93-B/I	178	50	106	35	52	18
HRMD93-B/II	300	50	132	35	63	18
HRMD93-B/III	425	50	250	35	130	18
HRMD93-B/IV	700	50	410	35	215	18

Ta=60℃	HRMD93 with full metal cover with glass window					
	T4(T130℃)		T5(T95℃)		T6(T80℃)	
Type	Power (W)	T Rise (K)	Power (W)	T Rise (K)	Power (W)	T Rise (K)
HRMD93-B/I	150	50	85	35	38	18
HRMD93-B/II	185	50	112	35	58	18
HRMD93-B/III	325	50	210	35	95	18
HRMD93-B/IV	700	50	410	35	180	18

Ta=40℃	HRMD93 with full metal cover without glass window					
	T4(T130℃)		T5(T95℃)		T6(T80℃)	
Type	Power (W)	T Rise (K)	Power (W)	T Rise (K)	Power (W)	T Rise (K)
HRMD93-B/I	255	70	178	55	116	38
HRMD93-B/II	375	70	215	55	150	38
HRMD93-B/III	575	70	425	55	276	38
HRMD93-B/IV	975	70	700	55	480	38

Ta=40℃	HRMD93 with full metal cover with glass window					
	T4(T130℃)		T5(T95℃)		T6(T80℃)	
Type	Power (W)	T Rise (K)	Power (W)	T Rise (K)	Power (W)	T Rise (K)
HRMD93-B/I	255	70	150	55	96	38
HRMD93-B/II	375	70	185	55	130	38
HRMD93-B/III	575	70	325	55	215	38
HRMD93-B/IV	975	70	660	55	460	38

Power consumption at Ta=60℃				
Type	Type of combination	T4/T130℃	T5/T95℃	T6/T80℃
*HRMD93-A/V/045	type III and IV	III: 310W IV: 460W	III: 155W IV: 310W	III: 80W IV: 160W
*HRMD93-A/V/046	type II and III and IV	II: 146W III: 280W IV: 383W	II: 115W III: 155W IV: 310W	II: 50W III: 80W IV: 160W
*HRMD93-A/V/047	type I and II and III and IV	I: 108W II: 146W III: 280W IV: 383W	I: 55W II: 110W III: 150W IV: 305W	I: 30W II: 50W III: 80W IV: 160W
*HRMD93-A/V/048	type I and III and IV	I: 103W III: 275W IV: 378W	I: 60W III: 155W IV: 310W	I: 30W III: 80W IV: 160W

Distribution Boxes
HRMD93 Series Explosion-proof Distribution Panels

Power consumption at Ta=40℃				
Type	**Type of combination**	**T4/T130℃**	**T5/T95℃**	**T6/T80℃**
*HRMD93-A/V/045	type III and IV	III: 370W IV: 787W	III: 310W IV: 460W	III: 155W IV: 310W
*HRMD93-A/V/046	type II and III and IV	II: 245W III: 393W IV: 787W	II: 146W III: 280W IV: 383W	II: 115W III: 155W IV: 310W
*HRMD93-A/V/047	type I and II and III and IV	I: 150W II: 220W III: 320W IV: 700W	I: 108W II: 146W III: 280W IV: 383W	I: 55W II: 110W III: 150W IV: 305W
*HRMD93-A/V/048	type I and III and IV	I: 150W III: 385W IV: 787W	I: 103W III: 275W IV: 378W	I: 60W III: 155W IV: 310W

Power consumption at Ta=60℃				
Type	**Type of combination**	**T4/T130℃**	**T5/T95℃**	**T6/T80℃**
*HRMD93-B/V/025	type I and II	I: 116W II: 153W	I: 60W II: 115W	I: 30W II: 50W
*HRMD93-B/V/020	type II and IV	II: 146W IV: 460W	II: 115W IV: 310W	II: 50W IV: 160W
*HRMD93-B/V/019	type III and IV	III: 310W IV: 460W	III: 155W IV: 310W	III: 80W IV: 160W

Power consumption at Ta=40℃				
Type	**Type of combination**	**T4/T130℃**	**T5/T95℃**	**T6/T80℃**
*HRMD93-B/V/025	type I and II	I: 150W II: 225W	I: 116W II: 153W	I: 60W II: 115W
*HRMD93-B/V/020	type II and IV	II: 245W IV: 787W	II: 146W IV: 460W	II: 115W IV: 310W
*HRMD93-B/V/019	type III and IV	III: 385W IV: 787W	III: 310W IV: 460W	III: 155W IV: 310W

Note: *reference represents a representative type, which can cover the type of HRMD93-B/V and HRMD93-A/V.

Dimension drawings (all dimensions in mm) - subject to alteration

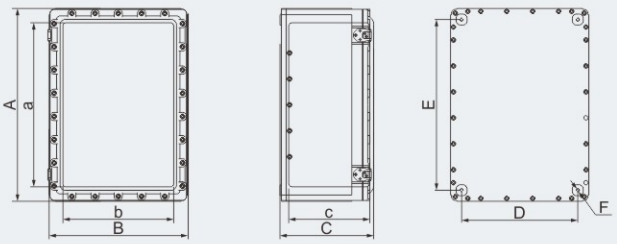

Version	External dimension			Internal dimension			Mounting dimension			Wight of enclosure (kg)
	A	B	C	a	b	c	D	E	F	
I	250	200	215	175	125	173	125	175	M10	21.00
II	350	250	290	280	180	236	175	175	M10	40.10
III	500	350	298	420	270	233	275	425	M12	76.20
IV	700	500	343	610	410	278	425	625	M12	155.00

Note

1. Please specify the number and size of cable entries and sides of the enclosure to be fitted.
2. Electrical schematic diagram shall be provided by user. Photo switch, AC contactor, thermal relay or others on request.
3. Please specify mounting type when ordering.
4. Rainproof canopy on request.

Dimension drawings (all dimensions in mm) - subject to alteration

From 2B

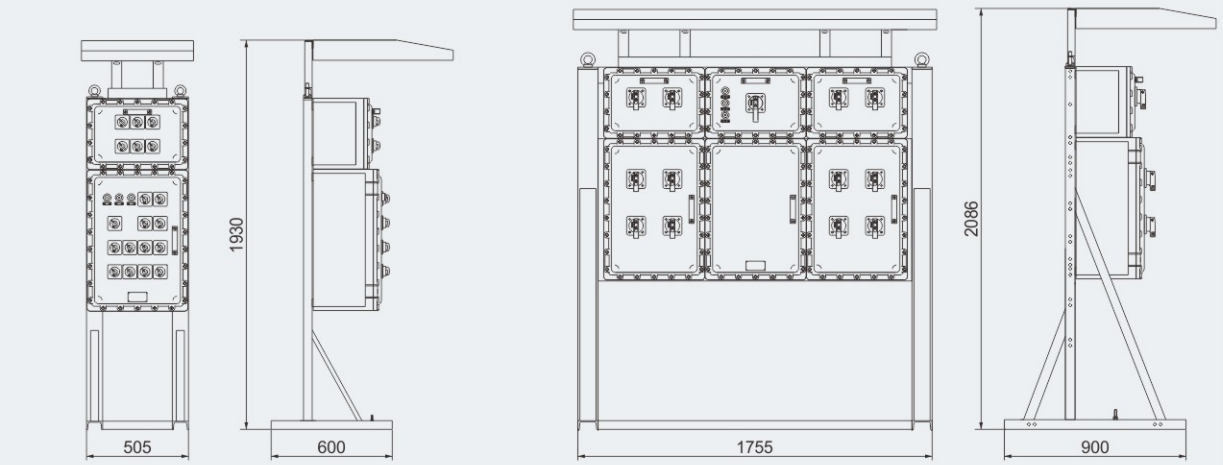

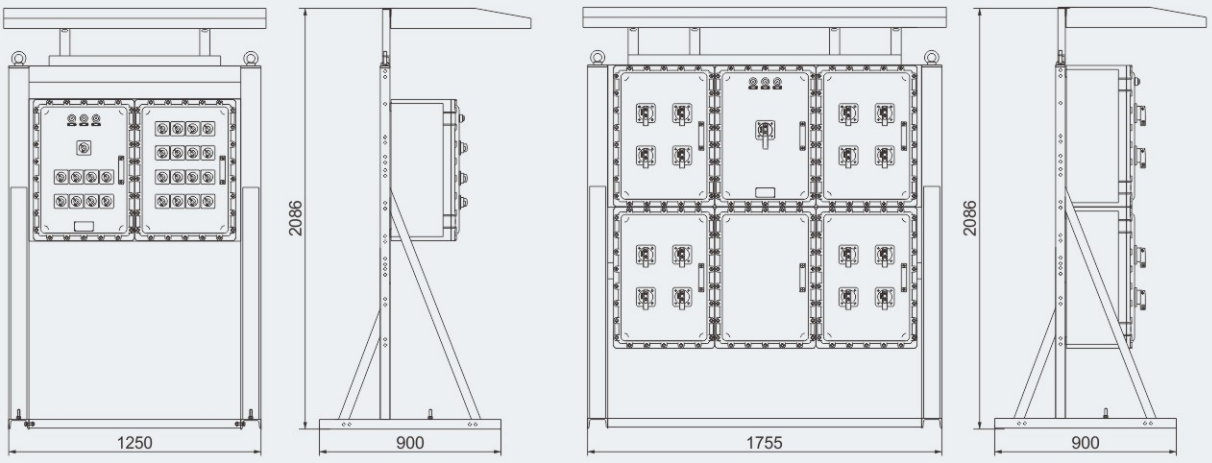

From 4B

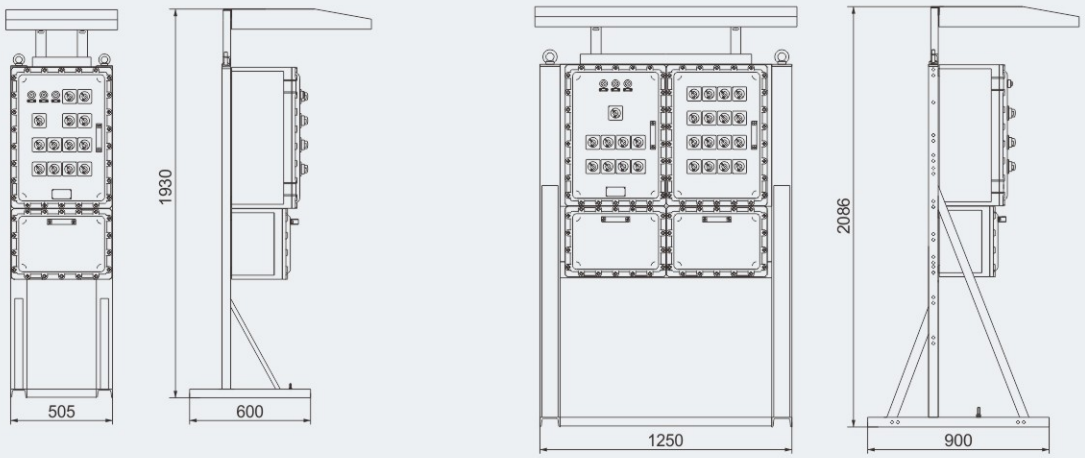

Dimension drawings (all dimensions in mm) - subject to alteration

From 4B

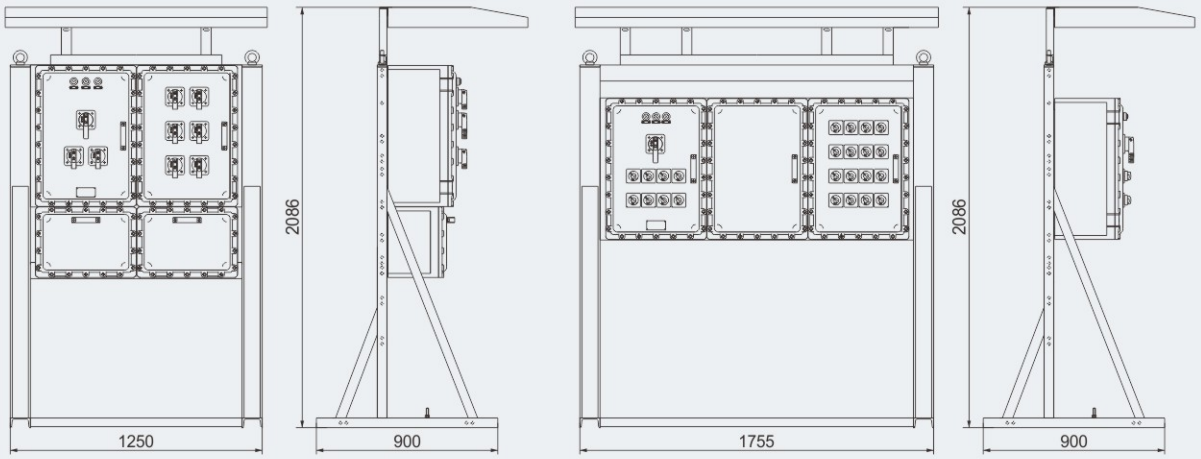

Independent type

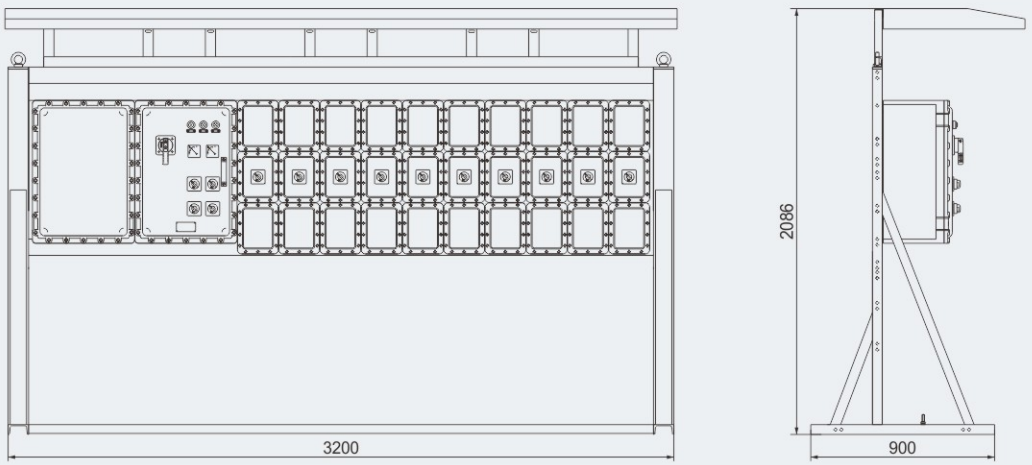

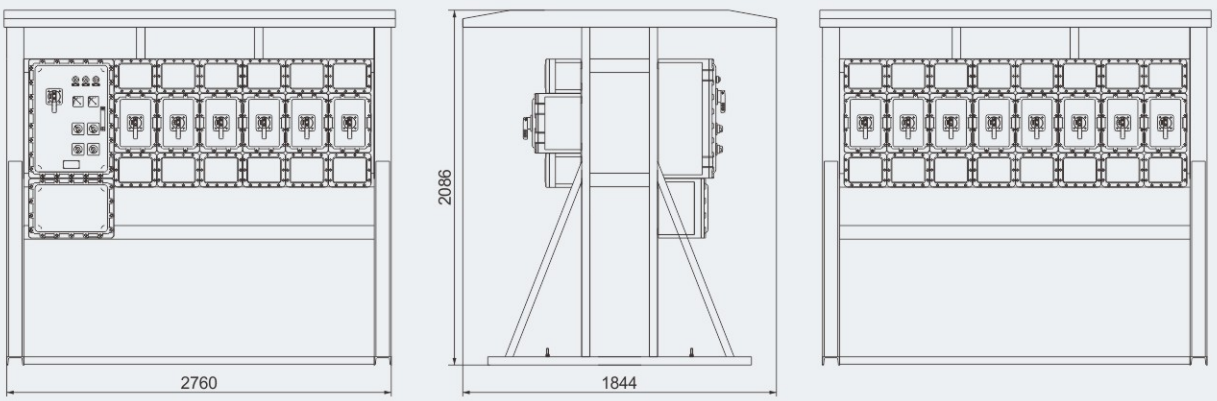

Distribution Boxes
HRMD95 Series Explosion-proof Distribution Panels



- Explosion protection to
  -CENELEC
  -IEC
  -NEC
- Can be used in
  Zone 1 and Zone 2
  Zone 21 and Zone 22
  Class I, Zone 1 and Zone 2
  Class I, Division 1, Groups B, C, D
- Flameproof enclosure (Ex d IIB+H_2), which can be used as feed distribution equipment in control and distribution system(such as distribution box, switch box of main circuit ,control box, terminal box or motor starting box etc.)
- Copper-free Aluminium Alloy enclosure, powder coated surface.
- Equipped with specialized hinge structure, which can prevent the flameproof joints from damage when opening and closing the box, and greatly prolong the service life of box.
- The boxes can be combined and installed freely to save space and meet the requirements of various distribution systems.
- Special requirements on request.
- The large space of the enclosure makes it easy for wire assembling.
- Adopting high-precision machining, excellent explosion-proof performance.
- Professionally designed door handles, reliable and safe when opening the door.
- Professionally designed hinges, reliable and safe when opening the door.

Catalogue number logic

HRMD 95 - □ / □ / □

- Rated current (A)
- Rated voltage (V)
- Specification code(VIIIB, IXB)
- Design No.
- Explosion-proof distribution panels

Zones1& 2; 21& 22

Technical data

Explosion-proof distribution panels HRMD95-□/□/□

Explosion protection	
Global (IECEx)	IECEx PCET 24.0030X
Gas and dust	Ex db IIB+H_2 T□[1] Gb Ex db [ia Ga] IIB+H_2 T□[1] Gb Ex db [ib Gb] IIB+H_2 T□[1] Gb Ex tb IIIC T□[1] Db
Europe (ATEX)	ATEX (applied for)
Gas and dust	Ⓔx II 2 G Ex db IIB+H_2 T□[1] Gb Ⓔx II 2 G Ex db [ia Ga] IIB+H_2 T□[1] Gb Ⓔx II 2 G Ex db [ib Gb] IIB+H_2 T□[1] Gb Ⓔx II 2 D Ex tb IIIC T□[1] Db
	[1]See table for max. dissipated power
Certificates	IECEx; ATEX
Conformity to standards	EN 60079-0, EN 60079-1, EN 60079-11, EN 60079-31 IEC 60079-0, IEC 60079-1, IEC 60079-11, IEC 60079-31
Enclosure material	Copper-free Aluminium Alloy enclosure, powder coated surface, window grey (RAL7040)
Exposed fastener	Stainless steel
Built-in components	The cover panel components include buttons, indicator lights, circuit breakers, and operating handles for universal switches, glass windows, etc. The internal components of the enclosure include MCCBs, MCBs, AC contactors, thermal relays, intermediate relays, fuses, transformers, PLCs, soft starters, inverters, terminal blocks, appropriately certified intrinsic safety associated apparatus, switches, gateways, power supplies, small solar panels, fire control modules, and transmitters, Light-operated switch, Time controller, Optical fiber control box, Magnet valve, Analytical instrument, Heater, Self-regulation trace heating cable, Magnetic ballast of HID light source, Electronic ballast of fluorescent lamp, Driver of LED light source, Ammeter, voltmeter, power meter, tachometer, temperature control meter, etc, Disconnecting switch, Time relay, DC power supply, Current transformer, Surge protector, Emergency device of HID light source, Emergency device of fluorescent lamp, Emergency device of LED light source, Safety barrier, Integrated protector of motor, Lighting building controller, Lighting energy saving controller, Fire monitoring controller, PLC, Temperature controller, Humidity controller, Current monitor, Voltage monitor, Motor protection switch, Dual power transfer switch, Counter, Timer, Solid state relay, Diode module, Industrial Personal Computer, UPS, Battery.
Rated voltage	Max. 1000V AC 50/60Hz Max. 1500V DC
Rated current	Max. 2000A
Degree of protection	IP66
Internal&external earthing	M8/M8
Ambient temperature	-60℃(-40℃)~+60℃(+40℃)
Cable entries	Standard M□ x 1.5 plug (the size of entry hole should be processed in accordance with actual requirements), NPT □ plug on request.
Cable gland (optional)	DQM-II (Ex d) or DQM-III (Ex d) is recommended. Please see P7/22~31.
Entry direction	Bottom
Mounting	Surface type (standard) Pedestal type (optional)

See table for max. dissipated power

Type	Ta max	Cover without glass window			Cover with glass window		
		T4	T5	T6	T4	T5	T6
HRMD95-VIIIB	Ta max=40/60℃	955/743	584/371	393/180	1003/780	613/390	189/189
HRMD95-IXB	Ta max=40/60℃	1478/1149	903/575	607/279	1551/1206	948/603	293/293

Dimension drawings (all dimensions in mm) - subject to alteration

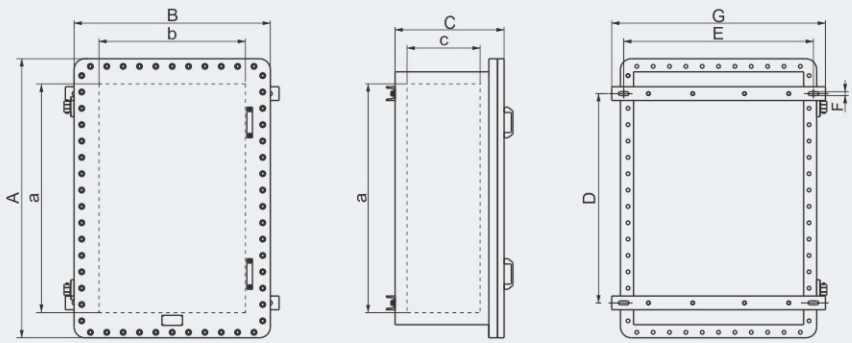

Model	A	B	C	a	b	c	D	E	F	G
HRMD95-VIIIB	980	720	425	800	540	270	660	690	18	800
HRMD95-IXB	1280	900	500	1050	670	330	960	870	18	980

Typical scheme diagram

Enclosure type	Components arrangement
HRMD95-VIIIB	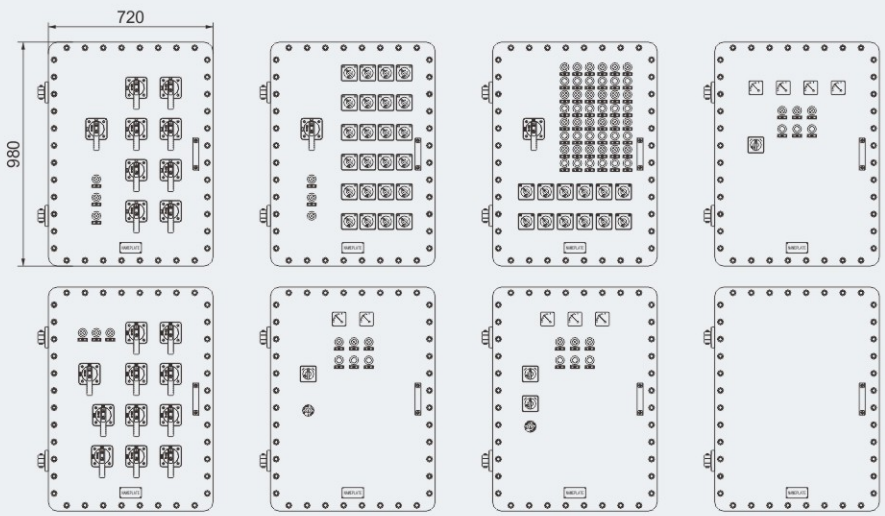
HRMD95-IXB	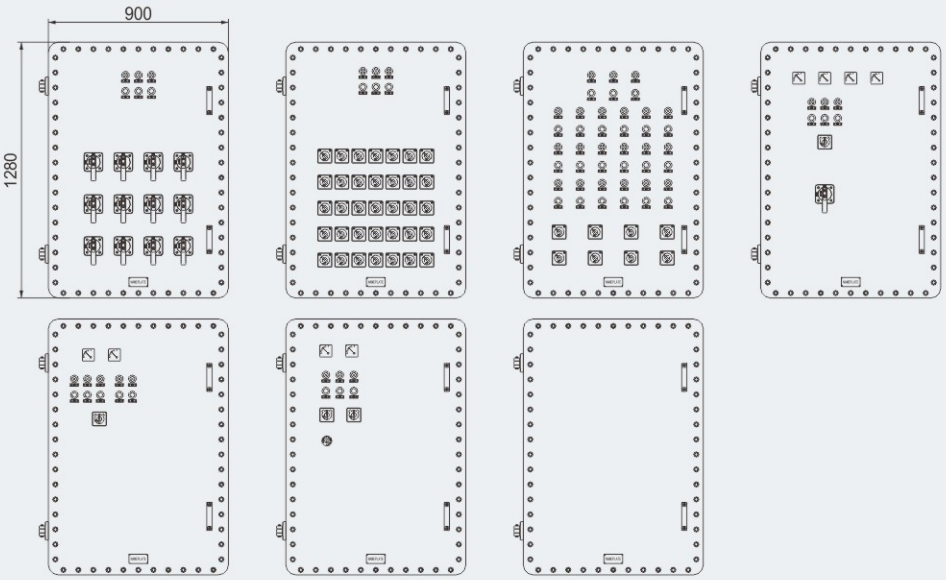

Distribution Boxes
HRMD96 Series Explosion-proof Distribution Panels

- Explosion protection to
  -CENELEC
  -IEC
  -NEC
- Can be used in
  Zone 1 and Zone 2
  Zone 21 and Zone 22
  Class I, Zone 1 and Zone 2
  Class I, Division 1, Groups B, C, D
- Flameproof enclosure (Ex db), which can be used as feed distribution equipment in control and distribution system (such as distribution box, switch box of main circuit ,control box, terminal box or motor starting box etc.)
- Enclosure: 304 stainless steel, 316L stainless steel and Q235.
- Equipped with specialized hinge structure, which can prevent the flameproof joints from damage when opening and closing the box, and greatly prolong the service life of box.
- The boxes can be combined and installed freely to save space and meet the requirements of various distribution systems.
- Special requirements on request.



Catalogue number logic

HRMD 96 - □ / □ / □

- Rated current (A)
- Rated voltage (V)
- Specification code (I, II, IIB, III, IIIB, IV, IVB, V, VB)
- Design No.
- Explosion-proof Power Distribution Panel

Zones1& 2; 21& 22

Technical data

Explosion-proof distribution panels HRMD96-□/□/□

Explosion protection	
Global (IECEx)	IECEx PCET 24.0027X
Gas and dust	Ex db IIC T6...T4[1] Gb Ex db [ia Ga] IIC T6...T4[1] Gb Ex db [ib Gb] IIC T6...T4[1] Gb Ex tb IIIC T80℃...T130℃[1] Db Ex tb [ia Da] IIIC T80℃...T130℃[1] Db Ex tb [ib Db] IIIC T80℃...T130℃[1] Db
Europe (ATEX)	ATEX (applied for)
Gas and dust	Ⓔx II 2 G Ex db IIC T6...T4[1] Gb Ⓔx II 2 G Ex db [ia Ga] IIC T6...T4[1] Gb Ⓔx II 2 G Ex db [ib Gb] IIC T6...T4[1] Gb Ⓔx II 2 D Ex tb IIIC T80℃...T130℃[1] Db Ⓔx II 2 D Ex tb [ia Da] IIIC T80℃...T130℃[1] Db Ⓔx II 2 D Ex tb [ib Db] IIIC T80℃...T130℃[1] Db
	See Selection table, P6/41~42
Certificates	IECEx; ATEX; CU-TR
Conformity to standards	EN IEC 60079-0, EN 60079-1, EN 60079-11, EN 60079-31 IEC 60079-0, IEC 60079-1, IEC 60079-11, IEC 60079-31
Enclosure material	304 stainless steel, 316L stainless steel and Q235
Exposed fastener	Stainless steel
Built-in components	Ammeters voltmeters, power meters, tachometers temperature control meters and other meters, control switches, disconnecting switches, Moulded Case Circuit Breakers (MCCB), Miniature Circuit Breakers(MCB), AC contactors, thermal relays, intermediate relays, time relays, control transformers, DC power supplies, current transformers, surge protectors, PLCs, fuses, soft starters, frequency converters, terminals, bus bars, resistors, light-operated switches, time controllers, optical fiber control boxes, magnet valves, analytical instruments, heaters, self-regulation trace heating cables, display screens, magnetic ballasts of HID light sources, electronic ballasts of fluorescent lamps, drivers of LED light sources, emergency devices of HID light sources, emergency devices of fluorescent lamps, emergency devices of LED light sources, safety barriers, integrated protectors of motors, lighting building controllers, lighting energy saving controllers, fire monitoring controllers, temperature controllers, humidity controllers, current monitors, voltage monitors, motor protection switches, dual power transfer switches, counters, timers, solid state relays, diode modules, industrial personal computers, UPS, batteries.
Rated voltage	Max. 1000V AC 50/60Hz Max. 1500V DC
Rated current	Max. 1000A
Degree of protection	IP66
Ambient temperature	-60℃(-40℃)~+60℃(+40℃), -40℃~+60℃(+40℃)
Cable entries	Standard M□ x 1.5 plug (the size of entry hole should be processed in accordance with actual requirements), NPT □ plug on request.
Cable gland (optional)	DQM-II (Ex d) or DQM-III (Ex d) is recommended. Please see P7/22~31.
Entry direction	Bottom
Mounting	Surface type (standard) Pedestal type (optional)

Selection table for max. dissipated power

Ta=60℃	HRMD96 with full metal cover without glass		
	T4(T130℃)	T5(T95℃)	T6(T80℃)
Type	Power (W)	Power (W)	Power (W)
HRMD96-I	101	51	22
HRMD96-II	216	110	41
HRMD96-IIB	216	110	41
HRMD96-III	302	127	69
HRMD96-IIIB	302	127	69
HRMD96-IV	600	250	150
HRMD96-IVB	600	250	150
HRMD96-V	652	276	140
HRMD96-VB	652	276	140

Ta=60℃	HRMD96 with metal cover with glass		
	T4(T130℃)	T5(T95℃)	T6(T80℃)
Type	Power (W)	Power (W)	Power (W)
HRMD96-I	101	51	19
HRMD96-II	199	101	38
HRMD96-IIB	199	101	38
HRMD96-III	271	120	64
HRMD96-IIIB	271	120	64
HRMD96-IV	603	258	153
HRMD96-IVB	603	258	153
HRMD96-V	650	273	142
HRMD96-VB	650	273	142

Ta=40℃	HRMD96 with full metal cover without glass		
	T4(T130℃)	T5(T95℃)	T6(T80℃)
Type	Power (W)	Power (W)	Power (W)
HRMD96-I	130	79	51
HRMD96-II	355	168	136
HRMD96-IIB	355	168	136
HRMD96-III	474	223	158
HRMD96-IIIB	474	223	158
HRMD96-IV	800	400	300
HRMD96-IVB	800	400	300
HRMD96-V	858	479	330
HRMD96-VB	858	479	330

Distribution Boxes
HRMD96 Series Explosion-proof Distribution Panels

Ta=40℃	HRMD96 with metal cover with glass		
	T4(T130℃)	T5(T95℃)	T6(T80℃)
Type	Power (W)	Power (W)	Power (W)
HRMD96-I	130	79	51
HRMD96-II	330	155	122
HRMD96-IIB	330	155	122
HRMD96-III	419	214	153
HRMD96-IIIB	419	214	153
HRMD96-IV	806	408	300
HRMD96-IVB	806	408	300
HRMD96-V	852	475	330
HRMD96-VB	852	475	330

Dimension drawings (all dimensions in mm) - subject to alteration

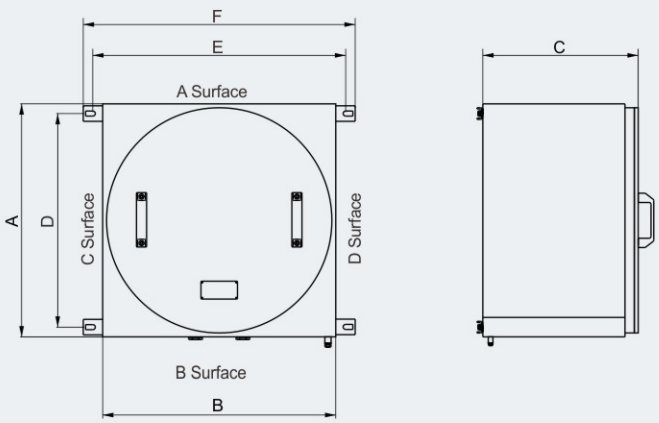

Version	Dimension (mm)					
	A	B	C	D	E	F
HRMD96-I	200	200	150	150	226	260
HRMD96-II	300	300	150	250	351	400
HRMD96-IIB	300	300	250	250	351	400
HRMD96-III	400	400	150	350	451	500
HRMD96-IIIB	400	400	250	350	451	500
HRMD96-IV	500	500	250	450	561	600
HRMD96-IVB	500	500	400	450	561	600
HRMD96-V	600	600	250	550	651	700
HRMD96-VB	600	600	400	550	651	700

Note: For cable entries:
1). Please specify the direction and size of each cable entry.
2). Cable gland is optional, DQM-II (Ex d) or DQM-III (Ex d) is recommended, please see P7/22~31.

Typical scheme diagram

Enclosure	Components arrangement
HRMD96-I	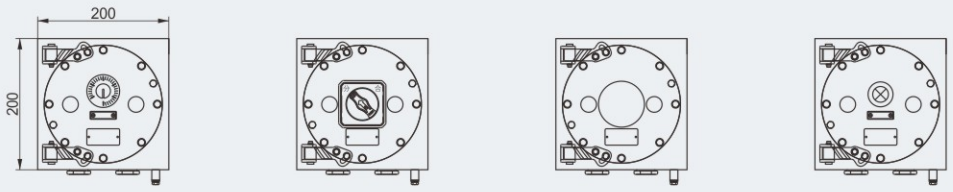
HRMD96-II HRMD96-IIB	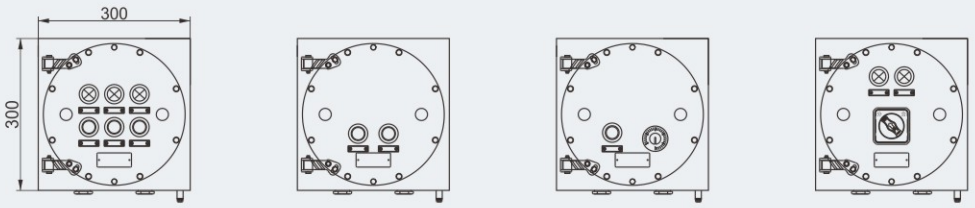
HRMD96-III HRMD96-IIIB	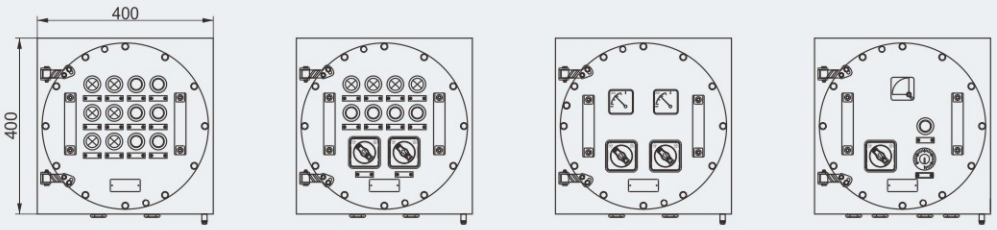
HRMD96-IV HRMD96-IVB	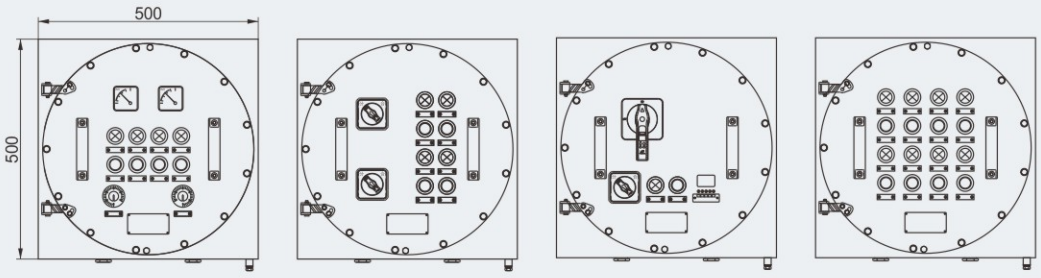
HRMD96-V HRMD96-VB	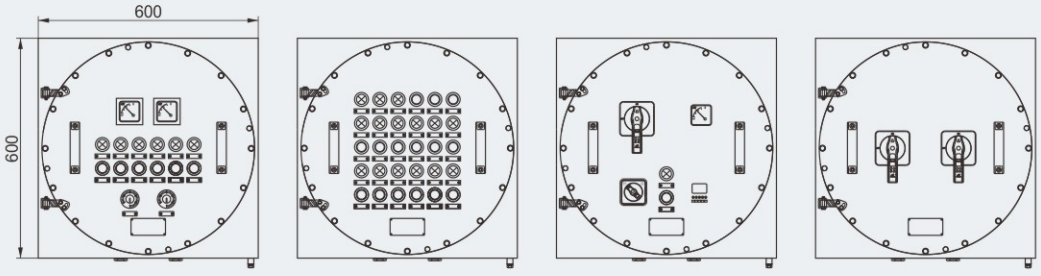

Distribution Boxes

BXM(D)8050 Series Explosion-proof Illumination (Power) Distribution Boxes (Ex d e IIC)



- Explosion protection to
  - -CENELEC
  - -IEC
  - -NEC
- Can be used in
  - Zone 1 and Zone 2
  - Zone 21 and Zone 22
  - Class I, Zone 1 and Zone 2
  - Class I, Division 2, Groups A , B, C, D
- Enclosure for modular combination (Ex e).
- Main switch and branch switch are operated with external rotary actuator.
- Internal wiring to the terminal is finished.
- International brand of explosion-proof terminal blocks.
- Enclosure: GRP (glass fibre-reinforced polyester resin)
- Entries plugged. Cable glands on request (see P7/18).
- Special requirements on request.

Catalogue number logic

BX M(D) 8050 - □/□/□/□

- Main switch current
- K: with main switch (optional)
- Branch current
- Number of branch circuit
- Design No.
- M: illumination D: power
- Explosion-proof distribution boxes

Note

1. Please refer to the Selection table on P6/49~51.
2. Please select internal components as below:
   BL8060 Series explosion-proof circuit breaker modules on P6/58~63.
   BRT8060 Series explosion-proof fuses on P6/64~65.

Zones 1&2; 21&22

Technical data

Explosion-proof illumination distribution boxes BXM8050-□/□/□/□

Explosion protection	
Global (IECEx)	IECEx CQM 14.0033X
Gas and dust	Ex db eb mb IIC T5 Gb (Ta: -20℃/-40℃~+40℃) Ex db eb mb IIC T4 Gb (Ta: -20℃/-40℃~+55℃) Ex tb IIIC T80℃ Db (Ta: -20℃/-40℃~+55℃) When the product is equipped with an explosion-proof heater, the marking is: Ex db eb mb IIC T4 Gb (Ta: -20℃/-40℃~+45℃) Ex tb IIIC T80℃ Db (Ta: -20℃/-40℃~+45℃) Note: protection type "mb" depends on the use of Ex component certified voltmeter or fuse module.
Europe (ATEX)	EPT 15 ATEX 2265
Gas and dust	Ⓔx II 2 G Ex db eb mb IIC T5 Gb (Ta: -20℃/-40℃~+40℃) Ⓔx II 2 G Ex db eb mb IIC T4 Gb (Ta: -20℃/-40℃~+55℃) Ⓔx II 2 D Ex tb IIIC T80℃ Db (Ta: -20℃/-40℃~+55℃) When the product is equipped with an explosion-proof heater, the marking is: Ⓔx II 2 G Ex db eb mb IIC T4 Gb (Ta: -20℃/-40℃~+45℃) Ⓔx II 2 D Ex tb IIIC T80℃ Db (Ta: -20℃/-40℃~+45℃) Note: protection type "mb" depends on the use of Ex component certified voltmeter or fuse module.
Certificates	IECEx; ATEX; CU-TR
Conformity to standards	EN 60079-0, EN 60079-1, EN 60079-7, EN 60079-18, EN 60079-31 IEC 60079-0, IEC 60079-1, IEC 60079-7, IEC 60079-18, IEC 60079-31
Rated voltage	Max. 690V AC 50/60Hz, Max. DC 500V
Rated current	Max.250A
Branch current	1A, 2A, 4A, 6A, 10A, 16A, 20A, 25A, 32A
Exposed fastener	Stainless steel
Enclosure	
Enclosure material	GRP (glass fibre-reinforced polyester resin)
Enclosure colour	Black
Enclosure type	Ex e
Built-in components	
Main switch	BL8060 Please see P6/58~63 Note: earth leakage protection on request
Branch switch	BL8060 Please see P6/58~63 Note: earth leakage protection on request
Terminal	International brand of explosion-proof terminal blocks
Indicator	Red
Degree of protection	IP66
Ambient temperature	-40℃(-20℃)~+55℃(+45℃/+40℃)
Cable entries	Standard M□ x 1.5 plug (see the Selection Table on P6/46)
Cable gland (optional)	DQM-I (Ex e) is recommended. Please see P7/18
Entry direction	Bottom
Mounting	Surface type (standard)

Electrical schematic diagram

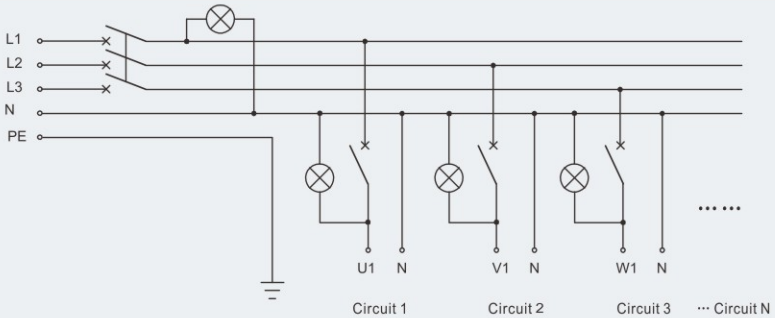

BXM8050 Series explosion-proof illumination distribution boxes

Distribution Boxes
BXM8050 Series Explosion-proof Illumination Distribution Boxes (Ex d e IIC)

Selection table of BXM8050 series explosion-proof illumination distribution boxes

Version	Description					Cable entries
	Main switch	Number of branch circuit	Branch switch	Branch current	Number of indicator	
BXM8050-4/□/K/□	BL8060 Current max. 100A	4	BL8060 1P/2P	1A 2A 4A 6A 10A 16A 20A 25A 32A On request	3	1 x M40 x 1.5 + 4 x M25 x 1.5
BXM8050-6/□/K/□		6			3	1 x M40 x 1.5 + 6 x M25 x 1.5
BXM8050-8/□/K/□		8			3	1 x M40 x 1.5 + 8 x M25 x 1.5
BXM8050-10/□/K/□		10			3	1 x M40 x 1.5 + 10 x M25 x 1.5
BXM8050-12/□/K/□		12			3	1 x M40 x 1.5 + 12 x M25 x 1.5
BXM8050-4/□	—	4	BL8060 1P/2P	1A 2A 4A 6A 10A 16A 20A 25A 32A On request	3	1 x M40 x 1.5 + 4 x M25 x 1.5
BXM8050-6/□		6			3	1 x M40 x 1.5 + 6 x M25 x 1.5
BXM8050-8/□		8			3	1 x M40 x 1.5 + 8 x M25 x 1.5
BXM8050-10/□		10			3	1 x M40x 1.5 + 10 x M25 x 1.5
BXM8050-12/□		12			3	1 x M40 x 1.5 + 12 x M25 x 1.5

Note

1. Please specify the number and size of cable entries and sides of the enclosure to be fitted.
2. Electrical schematic diagram shall be provided by user. Photo switch, AC contactor, thermal relay or others on request.
3. Please specify mounting type when ordering.
4. Rainproof canopy on request.

Technical data

Explosion-proof power distribution boxes BXD8050-□/□/□/□

Explosion protection	
Global (IECEx)	IECEx CQM 14.0033X
Gas and dust	Ex db eb mb IIC T5 Gb (Ta: -20℃/-40℃~+40℃) Ex db eb mb IIC T4 Gb (Ta: -20℃/-40℃~+55℃) Ex tb IIIC T80℃ Db (Ta: -20℃/-40℃~+55℃) When the product is equipped with an explosion-proof heater, the marking is: Ex db eb mb IIC T4 Gb (Ta: -20℃/-40℃~+45℃) Ex tb IIIC T80℃ Db (Ta: -20℃/-40℃~+45℃) Note: protection type "mb" depends on the use of Ex component certified voltmeter or fuse module.
Europe (ATEX)	EPT 15 ATEX 2265
Gas and dust	Ⓔx II 2 G Ex db eb mb IIC T5 Gb (Ta: -20℃/-40℃~+40℃) Ⓔx II 2 G Ex db eb mb IIC T4 Gb (Ta: -20℃/-40℃~+55℃) Ⓔx II 2 D Ex tb IIIC T80℃ Db (Ta: -20℃/-40℃~+55℃) When the product is equipped with an explosion-proof heater, the marking is: Ⓔx II 2 G Ex db eb mb IIC T4 Gb (Ta: -20℃/-40℃~+45℃) Ⓔx II 2 D Ex tb IIIC T80℃ Db (Ta: -20℃/-40℃~+45℃) Note: protection type "mb" depends on the use of Ex component certified voltmeter or fuse module.
Certificates	IECEx; ATEX; CU-TR
Conformity to standards	EN 60079-0, EN 60079-1, EN 60079-7, EN 60079-18, EN 60079-31 IEC 60079-0, IEC 60079-1, IEC 60079-7, IEC 60079-18, IEC 60079-31
Rated voltage	Max. 690V AC 50/60Hz, Max. DC 500V
Rated current	Max.250A
Branch current	1A, 2A, 4A, 6A, 10A, 16A, 20A, 25A, 32A, 40A, 50A, 63A
Exposed fastener	Stainless steel
Enclosure	
Enclosure material	GRP (glass fibre-reinforced polyester resin)
Enclosure colour	Black
Enclosure type	Ex e
Built-in components	
Main switch	BL8060 Please see P6/58~63 Note: earth leakage protection on request
Branch switch	BL8060 Please see P6/58~63 Note: earth leakage protection on request
Terminal	International brand of explosion-proof terminal blocks
Indicator	Red
Degree of protection	IP66
Ambient temperature	-40℃(-20℃)~+55℃(+45℃/+40℃)
Cable entries	Standard M□ x 1.5 plug (see the Selection Table on P6/48)
Cable gland (optional)	DQM-I (Ex e) is recommended. Please see P7/18
Entry direction	Bottom
Mounting	Surface type (standard)

Electrical schematic diagram

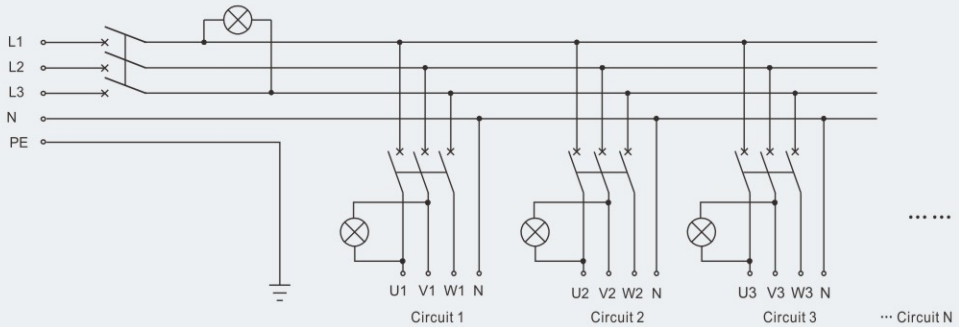

BXD8050 Series explosion-proof power distribution boxes

Distribution Boxes
BXD8050 Series Explosion-proof Power Distribution Boxes (Ex d e IIC)

Selection table of BXD8050 series explosion-proof power distribution boxes

Version	Description					Cable entries
	Main switch	Number of branch circuit	Branch switch	Branch current	Number of indicator	
BXD8050-4/□/K/□	BL8060 Current: max. 250A	4	BL8060 3P	1A 2A 4A 6A 10A 16A 20A 25A 32A 40A 50A 63A On request	3	1 x M50 x 1.5 + 4 x M25 x 1.5
BXD8050-6/□/K/□		6			3	1 x M50 x 1.5 + 6 x M25 x 1.5
BXD8050-8/□/K/□		8			3	1 x M50 x 1.5 + 8 x M25 x 1.5
BXD8050-10/□/K/□		10			3	1 x M50 x 1.5 + 10 x M25 x 1.5
BXD8050-12/□/K/□		12			3	1 x M50 x 1.5 + 12 x M25 x 1.5
BXD8050-4/□	—	4	BL8060 3P	1A 2A 4A 6A 10A 16A 20A 25A 32A 40A 50A 63A On request	3	1 x M50 x 1.5 + 4 x M25 x 1.5
BXD8050-6/□		6			3	1 x M50 x 1.5 + 6 x M25 x 1.5
BXD8050-8/□		8			3	1 x M50 x 1.5 + 8 x M25 x 1.5
BXD8050-10/□		10			3	1 x M50 x 1.5 + 10 x M25 x 1.5
BXD8050-12/□		12			3	1 x M50 x 1.5 + 12 x M25 x 1.5

Note

1. Please specify the number and size of cable entries and sides of the enclosure to be fitted.
2. Electrical schematic diagram shall be provided by user. Photo switch, AC contactor, thermal relay or others on request.
3. Please specify mounting type when ordering.
4. Rainproof canopy on request.

Dimension drawings (all dimensions in mm) - subject to alteration

Note: The following drawings are suitable for:

1.BXM8050 main switch 63A, branch switch (1P/2P) without earth leakage protection.
2.BXD8050 main switch 63A, branch switch (3P) without earth leakage protection.
3.BXM8050 main switch 63A, branch switch (1P) with earth leakage protection.

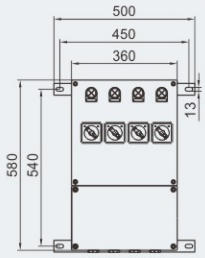

BXM(D)8050-4

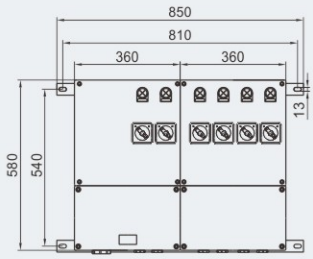

BXM(D)8050-6

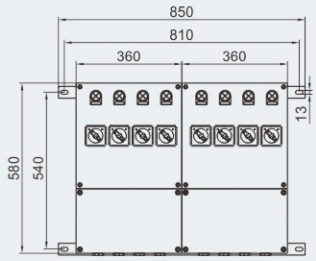

BXM(D)8050-8

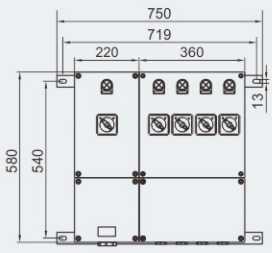

BXM(D)8050-4/K

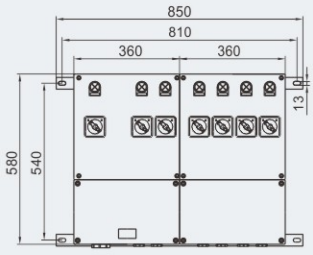

BXM(D)8050-6/K

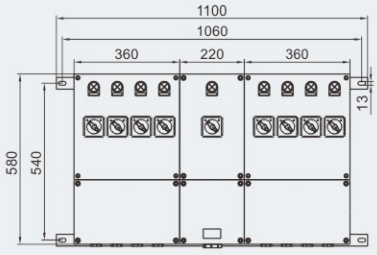

BXM(D)8050-8/K

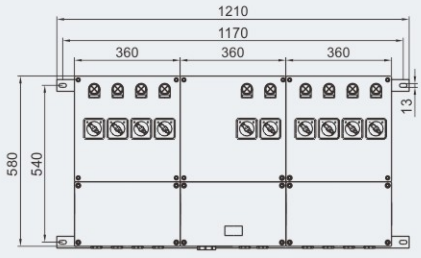

BXM(D)8050-10

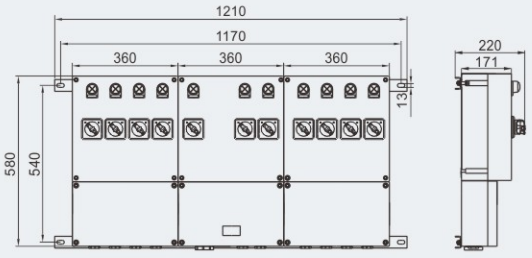

BXM(D)8050-10/K

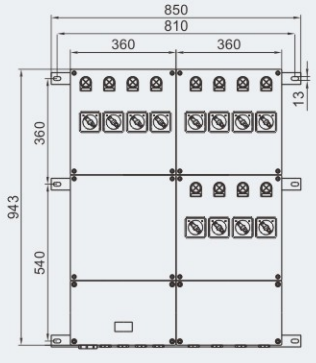

BXM(D)8050-12

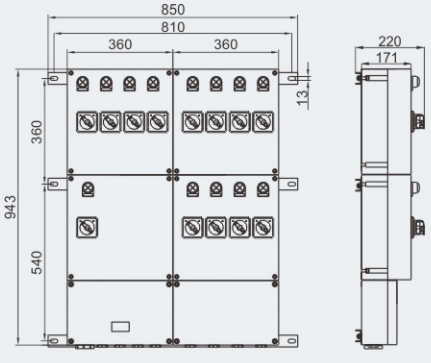

BXM(D)8050-12/K

Dimension drawings (all dimensions in mm) - subject to alteration

Note: The following drawings are suitable for:
BXM8050 main switch 63A, branch switch (2P) with earth leakage protection.

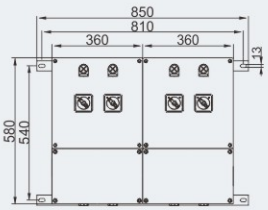

BXM8050-4

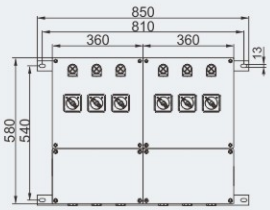

BXM8050-6

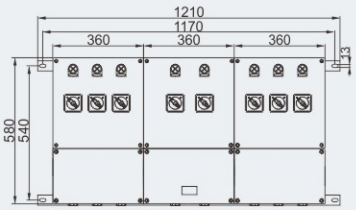

BXM8050-8

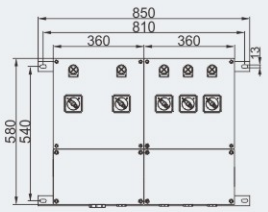

BXM8050-4/K

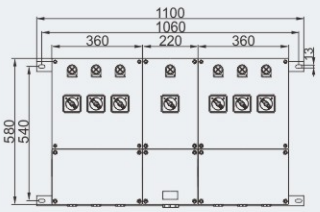

BXM8050-6/K

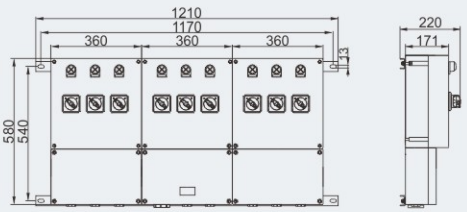

BXM8050-8/K

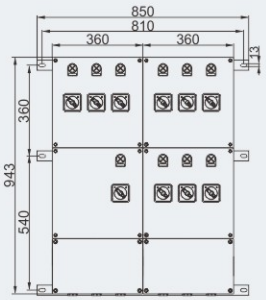

BXM8050-10

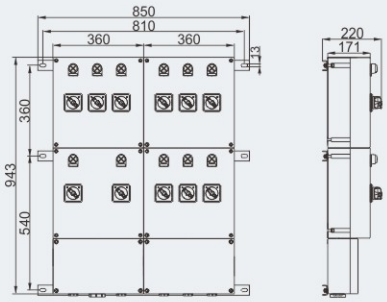

BXM8050-10/K

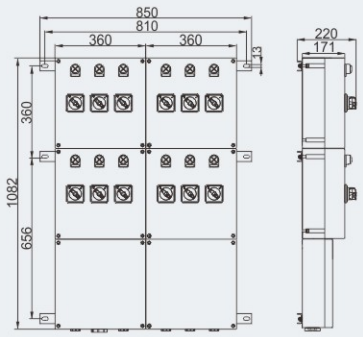

BXM8050-12

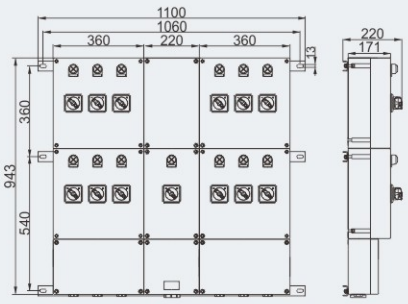

BXM8050-12/K

Dimension drawings (all dimensions in mm) - subject to alteration

Note: The following drawings are suitable for:
BXD8050 main switch: 80A~250A, branch switch (3P) without earth leakage protection.

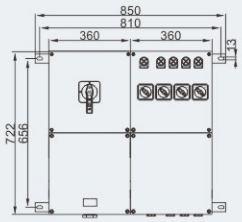

BXD8050-4/K

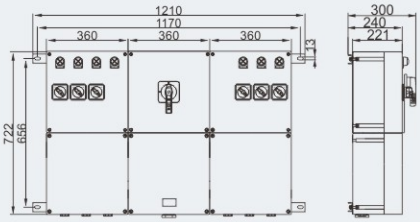

BXD8050-6/K

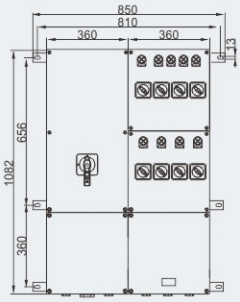

BXD8050-8/K

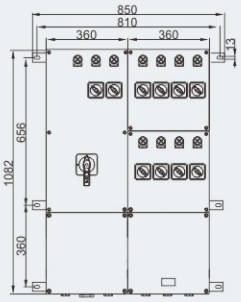

BXD8050-10/K

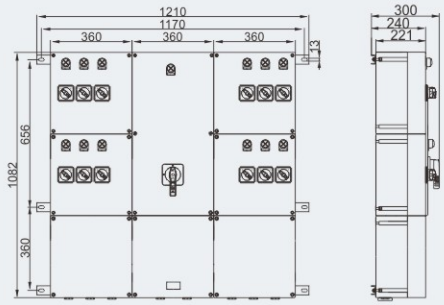

BXD8050-12/K

Note: The following drawings are suitable for:
BXD8050 main switch: 80A~250A, branch switch (3P/4P) with earth leakage protection.

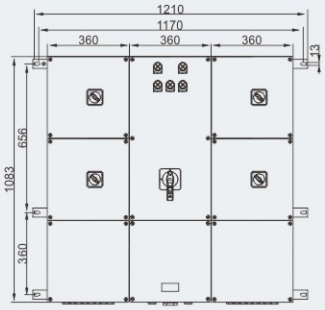

BXD8050-4/K

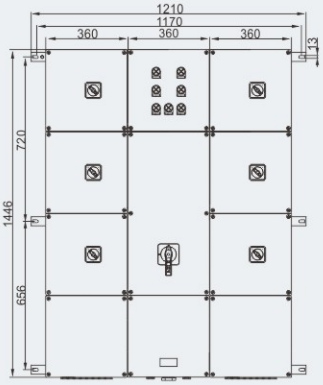

BXD8050-6/K

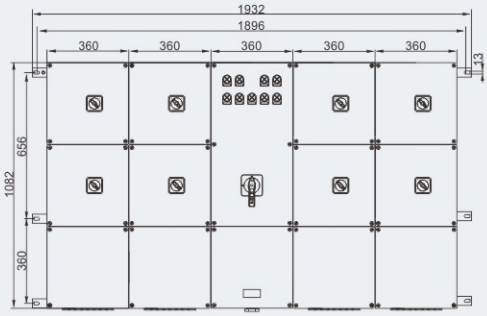

BXD8050-8/K

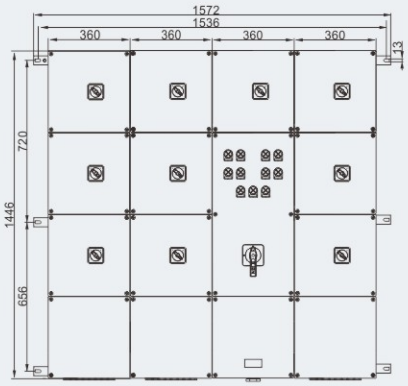

BXD8050-10/K

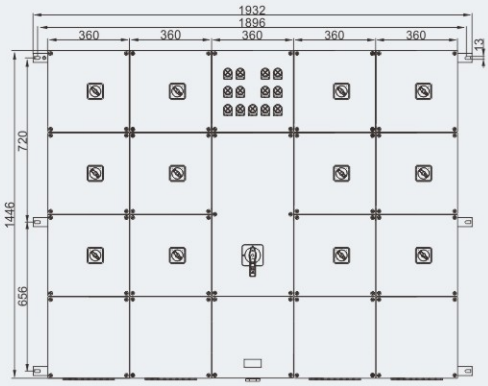

BXD8050-12/K



Distribution Boxes

BXM(D)8061 Series Explosion-proof Illumination (Power) Distribution Boxes (Ex db eb IIC)



- Explosion protection to
  - -CENELEC
  - -IEC
  - -NEC
- Can be used in
  - Zone 1 and Zone 2
  - Zone 21 and Zone 22
  - Class I, Zone 1 and Zone 2
  - Class I, Division 2, Groups A , B, C, D
- Enclosure for modular combination (Ex e).
- Main switch and branch switch are operated with external rotary actuator.
- Internal wiring to the terminal is finished.
- International brand of explosion-proof terminal blocks.
- Enclosure: stainless steel.
- Entries plugged. Cable glands on request (see P7/18).
- Special requirements on request.

Catalogue number logic

BX M(D) 8061 - □/□/□/□

- Main switch current
- K: with main switch (optional)
- Branch current
- Number of branch circuit
- Design No.
- M: illumination D: power
- Explosion-proof distribution boxes

Note

1. Please refer to the Selection table on P6/57.
2. Please select internal components as below:
   BL8060 Series explosion-proof circuit breaker modules on P6/58~63.
   BRT8060 Series explosion-proof fuses on P6/64~65.

Zones 1&2; 21&22

Technical data

Explosion-proof illumination distribution boxes BXM8061-□/□/□/□

Explosion protection	
Global (IECEx)	IECEx CQM 22.0002X
Gas and dust	Ex db eb mb IIC T5 Gb (Ta: -20℃~+40℃) Ex db eb mb IIC T4 Gb (Ta: -20℃~+55℃) Ex tb IIIC T80℃ Db (Ta: -20℃~+55℃) When the product is equipped with an explosion-proof heater, the marking is: Ex db eb mb IIC T4 Gb (Ta: -20℃~+45℃) Ex tb IIIC T80℃ Db (Ta: -20℃~+45℃)
Europe (ATEX)	TÜV CY 22 ATEX 0206669X
Gas and dust	Ⓔx II 2 G Ex db eb mb IIC T5 Gb (Ta: -20℃~+40℃) Ⓔx II 2 G Ex db eb mb IIC T4 Gb (Ta: -20℃~+55℃) Ⓔx II 2 D Ex tb IIIC T80℃ Db (Ta: -20℃~+55℃) When the product is equipped with an explosion-proof heater, the marking is: Ⓔx II 2 G Ex db eb mb IIC T4 Gb (Ta: -20℃~+45℃) Ⓔx II 2 D Ex tb IIIC T80℃ Db (Ta: -20℃~+45℃)
Certificates	IECEx; ATEX
Conformity to standards	EN 60079-0, EN 60079-1, EN 60079-7, EN 60079-18, EN 60079-31 IEC 60079-0, IEC 60079-1, IEC 60079-7, IEC 60079-18, IEC 60079-31
Rated voltage	Max. AC 690V 50/60Hz, Max. DC 500V
Rated current	Max. 250A
Exposed fastener	Stainless steel
Enclosure	
Enclosure material	Stainless steel
Enclosure type	Ex e
Built-in components	
Main switch	BL8060 Please see P6/58~63 Note: earth leakage protection on request
Branch switch	BL8060 Please see P6/58~63 Note: earth leakage protection on request
Terminal	International brand of explosion-proof terminal blocks
Indicator	Red
Degree of protection	IP66
Ambient temperature	-20℃~+55℃(+45℃/+40℃)
Cable entries	Standard M□ x 1.5 plug (see the Selection Table on P6/54)
Cable gland (optional)	DQM-I (Ex e) is recommended. Please see P7/18
Entry direction	Bottom
Mounting	Surface type (standard)

Electrical schematic diagram

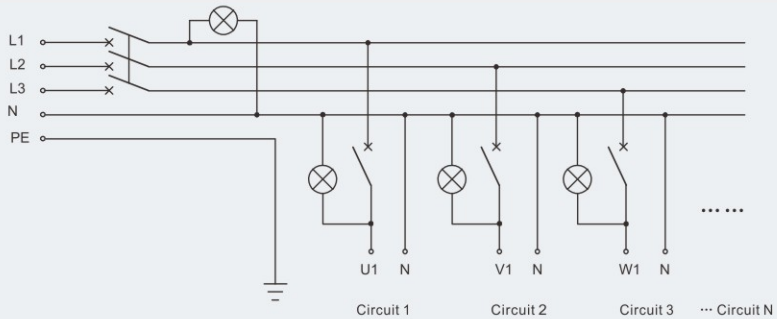

BXM8061 Series explosion-proof illumination distribution boxes

Distribution Boxes

BXM8061 Series Explosion-proof Illumination Distribution Boxes (Ex db eb IIC)

Selection table of BXM8061 series explosion-proof illumination distribution boxes

Version	Description					Cable entries
	Main switch	Number of branch circuit	Branch switch	Branch current	Number of indicator	
BXM8061-4/□/K/□	BL8060 Current max. 100A	4	BL8060 1P/2P	1A 2A 4A 6A 10A 16A 20A 25A 32A On request	3	1 x M40 x 1.5 + 4 x M25 x 1.5
BXM8061-6/□/K/□		6			3	1 x M40 x 1.5 + 6 x M25 x 1.5
BXM8061-8/□/K/□		8			3	1 x M40 x 1.5 + 8 x M25 x 1.5
BXM8061-10/□/K/□		10			3	1 x M40 x 1.5 + 10 x M25 x 1.5
BXM8061-12/□/K/□		12			3	1 x M40 x 1.5 + 12 x M25 x 1.5
BXM8061-4/□	—	4	BL8060 1P/2P	1A 2A 4A 6A 10A 16A 20A 25A 32A On request	3	1 x M40 x 1.5 + 4 x M25 x 1.5
BXM8061-6/□		6			3	1 x M40 x 1.5 + 6 x M25 x 1.5
BXM8061-8/□		8			3	1 x M40 x 1.5 + 8 x M25 x 1.5
BXM8061-10/□		10			3	1 x M40x 1.5 + 10 x M25 x 1.5
BXM8061-12/□		12			3	1 x M40 x 1.5 + 12 x M25 x 1.5

Note

1. Please specify the number and size of cable entries and sides of the enclosure to be fitted.
2. Electrical schematic diagram shall be provided by user. Photo switch, AC contactor, thermal relay or others on request.
3. Please specify mounting type when ordering.
4. Rainproof canopy on request.

Technical data

Explosion-proof power distribution boxes BXD8061-□/□/□/□

Explosion protection	
Global (IECEx)	IECEx CQM 22.0002X
Gas and dust	Ex db eb mb IIC T5 Gb (Ta: -20℃~+40℃) Ex db eb mb IIC T4 Gb (Ta: -20℃~+55℃) Ex tb IIIC T80℃ Db (Ta: -20℃~+55℃) When the product is equipped with an explosion-proof heater, the marking is: Ex db eb mb IIC T4 Gb (Ta: -20℃~+45℃) Ex tb IIIC T80℃ Db (Ta: -20℃~+45℃)
Europe (ATEX)	TÜV CY 22 ATEX 0206669X
Gas and dust	Ⓔx II 2 G Ex db eb mb IIC T5 Gb (Ta: -20℃~+40℃) Ⓔx II 2 G Ex db eb mb IIC T4 Gb (Ta: -20℃~+55℃) Ⓔx II 2 D Ex tb IIIC T80℃ Db (Ta: -20℃~+55℃) When the product is equipped with an explosion-proof heater, the marking is: Ⓔx II 2 G Ex db eb mb IIC T4 Gb (Ta: -20℃~+45℃) Ⓔx II 2 D Ex tb IIIC T80℃ Db (Ta: -20℃~+45℃)
Certificates	IECEx; ATEX
Conformity to standards	EN 60079-0, EN 60079-1, EN 60079-7, EN 60079-18, EN 60079-31 IEC 60079-0, IEC 60079-1, IEC 60079-7, IEC 60079-18, IEC 60079-31
Rated voltage	Max. AC 690V 50/60Hz, Max. DC 500V
Rated current	Max. 250A
Exposed fastener	Stainless steel
Enclosure	
Enclosure material	Stainless steel
Enclosure type	Ex e
Built-in components	
Main switch	BL8060 Please see P6/58~63 Note: earth leakage protection on request
Branch switch	BL8060 Please see P6/58~63 Note: earth leakage protection on request
Terminal	International brand of explosion-proof terminal blocks
Indicator	Red
Degree of protection	IP66
Ambient temperature	-20℃~+55℃(+45℃/+40℃)
Cable entries	Standard M□ x 1.5 plug (see the Selection table on P6/56)
Cable gland (optional)	DQM-I (Ex e) is recommended. Please see P7/18
Entry direction	Bottom
Mounting	Surface type (standard)

Electrical schematic diagram

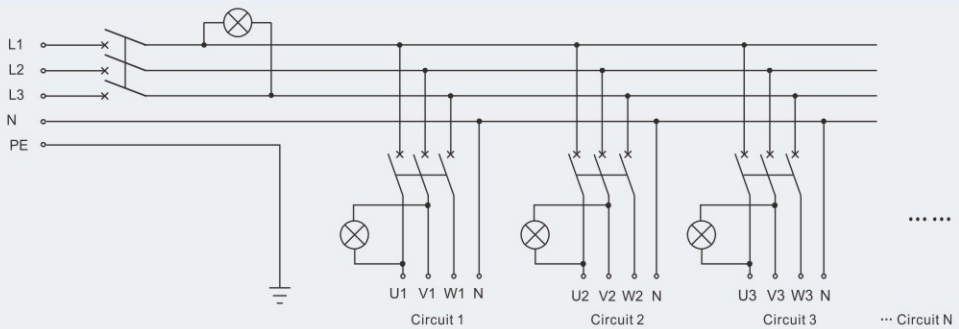

BXD8061 Series explosion-proof power distribution boxes

Distribution Boxes

BXD8061 Series Explosion-proof Power Distribution Boxes (Ex db eb IIC)

Selection table of BXD8061 series explosion-proof power distribution boxes

Version	Description					Cable entries
	Main switch	Number of branch circuit	Branch switch	Branch current	Number of indicator	
BXD8061-4/□/K/□	BL8060 Current: max. 250A	4	BL8060 3P	1A 2A 4A 6A 10A 16A 20A 25A 32A 40A 50A 63A On request	3	1 x M50 x 1.5 + 4 x M25 x 1.5
BXD8061-6/□/K/□		6			3	1 x M50 x 1.5 + 6 x M25 x 1.5
BXD8061-8/□/K/□		8			3	1 x M50 x 1.5 + 8 x M25 x 1.5
BXD8061-10/□/K/□		10			3	1 x M50 x 1.5 + 10 x M25 x 1.5
BXD8061-12/□/K/□		12			3	1 x M50 x 1.5 + 12 x M25 x 1.5
BXD8061-4/□	—	4	BL8060 3P	1A 2A 4A 6A 10A 16A 20A 25A 32A 40A 50A 63A On request	3	1 x M50 x 1.5 + 4 x M25 x 1.5
BXD8061-6/□		6			3	1 x M50 x 1.5 + 6 x M25 x 1.5
BXD8061-8/□		8			3	1 x M50 x 1.5 + 8 x M25 x 1.5
BXD8061-10/□		10			3	1 x M50 x 1.5 + 10 x M25 x 1.5
BXD8061-12/□		12			3	1 x M50 x 1.5 + 12 x M25 x 1.5

Note

1. Please specify the number and size of cable entries and sides of the enclosure to be fitted.
2. Electrical schematic diagram shall be provided by user. Photo switch, AC contactor, thermal relay or others on request.
3. Please specify mounting type when ordering.
4. Rainproof canopy on request.

Dimension drawings (all dimensions in mm) - subject to alteration

Note: The following drawings are suitable for:
BXM(D)8061 main switch: 63A, branch switch (3P/2P/1P) without earth leakage protection.

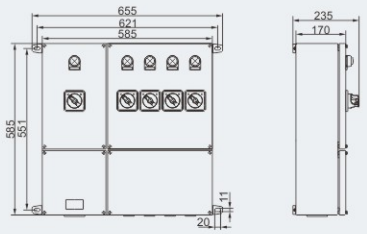

BXM(D)8061-4K

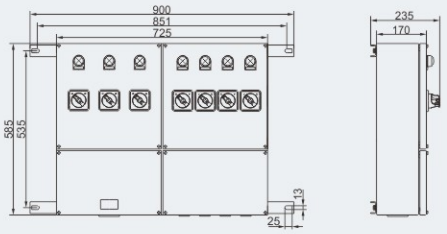

BXM(D)8061-6K

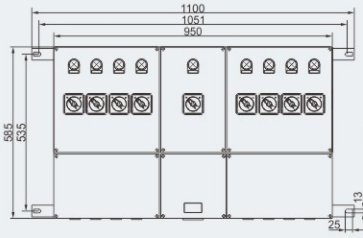

BXM(D)8061-8K

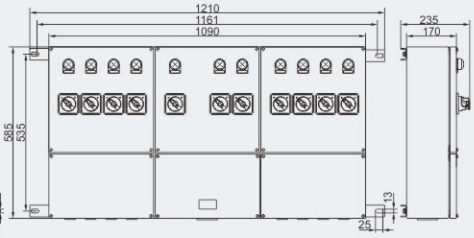

BXM(D)8061-10K

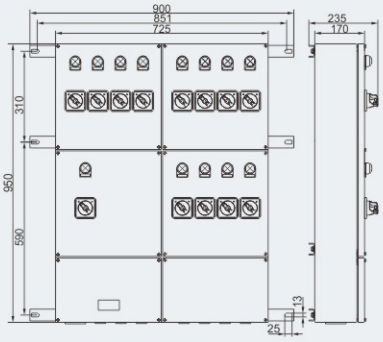

BXM(D)8061-12K

Note: The following drawings are suitable for:
BXM(D)8061 main switch: 80A~250A, branch switch (3P/2P/1P) without earth leakage protection.

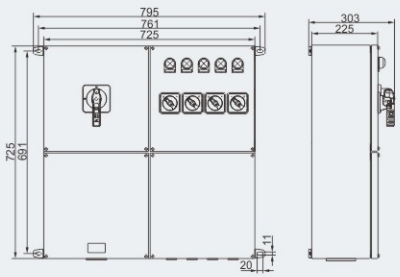

BXM(D)8061-4K

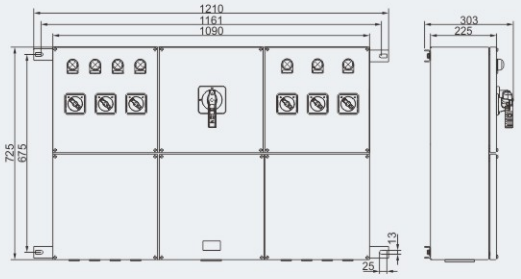

BXM(D)8061-6K

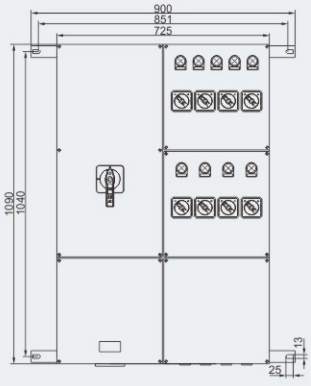

BXM(D)8061-8K

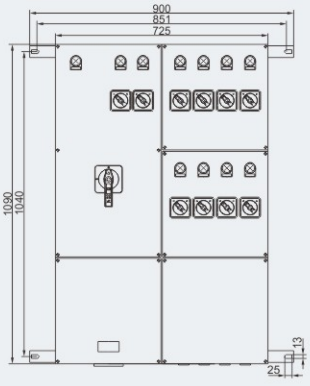

BXM(D)8061-10K

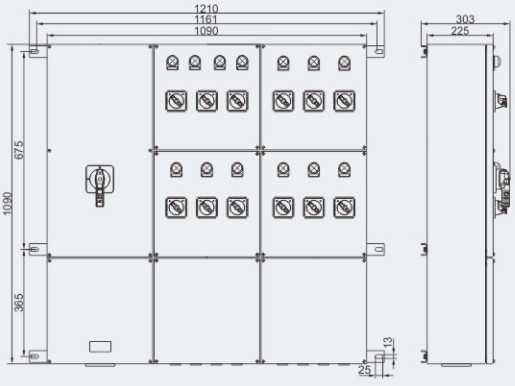

BXM(D)8061-12K

Components for Distribution Boxes
BL8060 Series Explosion-proof Circuit Breaker Modules



- Explosion protection to
  -CENELEC
  -IEC
  -NEC
- Can be used in
  Zone 1 and Zone 2
  Class I, Zone 1 and Zone 2
  Class I, Division 2, Groups A , B, C, D
- Product of flame-proof structure; the cavity is of engineering plastic embedded with high strength metal frame structure; with strong corrosion-proof capacity and reliable performance.
- Built-in Schneider iC65 series MCB, special operation mechanism internally designed, reliable overall operation.

Catalogue number logic

BL8060 - □ / □ / □ / □ / □ / □ / □ / □

- LT: ambient temperature: -40℃~+70℃, or blank: -20℃~+70℃
- F: auxiliary contacts module, or blank
- L: residual current module, or blank
- Function, C: Lighting protection, D: Power Supply Protection, G: Disconnector
- Interuption capability, N: 6kA, H: 10kA, L: 15kA, L1: 25kA or blank
- Pole number
- Rated current
- Explosion-proof circuit breaker modules and Design No.

BL8060-d / □ / □ / □ / □ / □ / □ / □

- F: auxiliary contacts module, or blank
- L: residual current module, or blank
- Function, C: Lighting protection, D: Power Supply Protection, G: Disconnector
- Breaking capability, B: 16kA, B1: 18kA, C: 25kA, H: 10kA(MCB), H1: 70kA, H2: 100kA, L: 15kA(MCB), L1: 120kA, N: 6kA(MCB), N1: 36kA, S: 50kA, V: 150kA
- Pole number
- Rated current
- Explosion-proof circuit breaker modules and Design No.

Zones 1&2

Technical data

Explosion-proof circuit breaker modules BL8060-□/□/□/□/□(≤63A)(-20℃~+70℃)

Explosion protection						
Global (IECEx)	IECEx CQM 14.0031U					
Gas	Ex db eb IIC Gb					
Europe (ATEX)	EUT 14 ATEX 1301U					
Gas	Ⓔx II 2 G Ex db eb IIC Gb					
Certificates	IECEx; ATEX					
Conformity to standards	EN 60079-0, EN 60079-1, EN 60079-7					
	IEC 60079-0, IEC 60079-1, IEC 60079-7					
Enclosure material	GRP (glass fibre-reinforced polyester resin)					
Rated voltage	Max.690V AC 50/60Hz, Max. 500V DC					
Rated current	1A, 2A, 4A, 6A, 10A, 16A, 20A, 25A, 32A, 40A, 50A, 63A					
Rated residual operating current	30mA, 300mA, 300mAⓈ Ⓢ:Under-voltage tripping(instant)					
Rated residual current characteristics	AC, A					
Mechanical life	20000 times					
Auxiliary contact	1NO+1NC (indicating contact in OFF state)					
Number of pole	1P, 2P, 3P, 4P, 1PL, 2PL					
Ambient temperature	-20℃~+70℃					
Breaking capacity	Ph.-Ph. (2P, 3P, 4P)	12~133V	220~240V	380~415V	440V	Use breaking
	Ph.-N (1P, 1P+N)	12~60V	100~133V	220~240V	-	capacity
	Rated current 1~4A	6kA、10kA、22kA				100%Icu
	Rated current 6~63A					75%Icu

Dimension drawings (all dimensions in mm) - subject to alteration

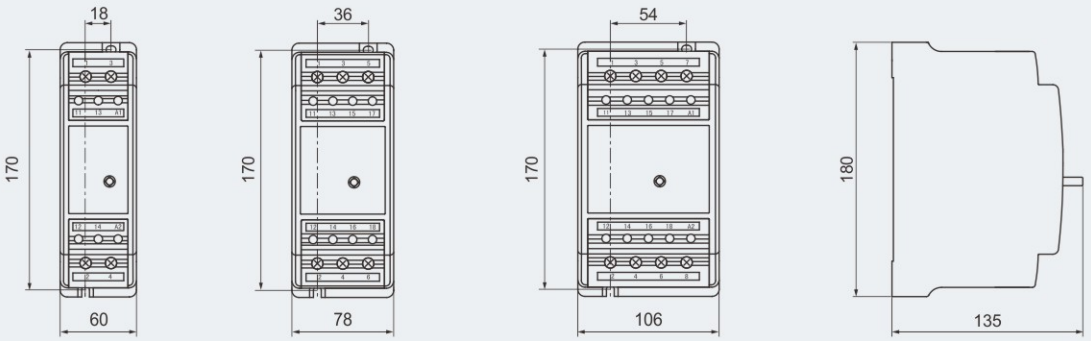

BL8060-□/1/□/□/□
BL8060-□/1/□/□/F
BL8060-□/2/□/□/□

BL8060-□/2/□/□/F
BL8060-□/3/□/□/□

BL8060-□/3/□/□/F
BL8060-□/4/□/□/□
BL8060-□/4/□/□/F

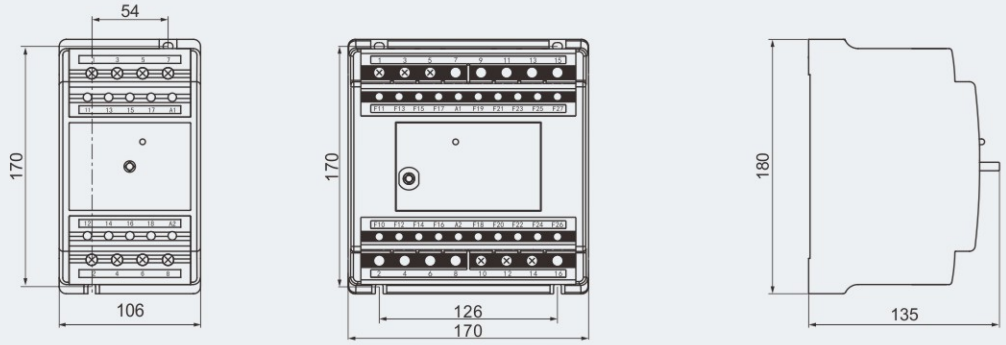

BL8060-□/2/□/□/L

BL8060-□/3/□/□/L
BL8060-□/4/□/□/L

Technical data

Explosion-proof circuit breaker modules BL8060-□/□/□/□/□/LT(≤63A)(-40℃~+70℃)

Explosion protection						
Global (IECEx)	IECEx CQM 14.0031U					
Gas	Ex db eb IIC Gb					
Europe (ATEX)	EUT 14 ATEX 1301U					
Gas	Ⓔx II 2 G Ex db eb IIC Gb					
Certificates	IECEx; ATEX					
Conformity to standards	EN 60079-0, EN 60079-1, EN 60079-7					
	IEC 60079-0, IEC 60079-1, IEC 60079-7					
Enclosure material	GRP (glass fibre-reinforced polyester resin)					
Rated voltage	Max.690V AC 50/60Hz, Max. 500V DC					
Rated current	1A, 2A, 4A, 6A, 10A, 16A, 20A, 25A, 32A, 40A, 50A, 63A					
Rated residual operating current	30mA, 300mA, 300mAⓈ Ⓢ:Under-voltage tripping(instant)					
Rated residual current characteristics	AC, A					
Mechanical life	20000 times					
Auxiliary contact	1NO+1NC (indicating contact in OFF state)					
Number of pole	1P, 2P, 3P, 4P, 1PL, 2PL					
Ambient temperature	-40℃~+70℃					
Breaking capacity	Ph.-Ph. (2P, 3P, 4P)	12~133V	220~240V	380~415V	440V	Use breaking
	Ph.-N (1P, 1P+N)	12~60V	100~133V	220~240V	-	capacity
	Rated current 1~4A	6kA、10kA、22kA				100%Icu
	Rated current 6~63A					75%Icu

Dimension drawings (all dimensions in mm) - subject to alteration

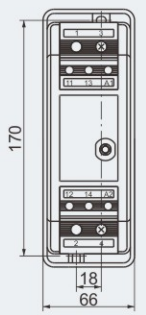

BL8060-□/1/□/□/LT
BL8060-□/2/□/□/LT
BL8060-□/1/□/□/F/LT

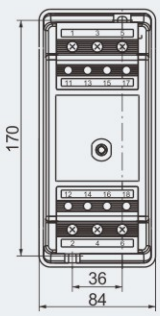

BL8060-□/3/□/□/LT
BL8060-□/2/□/□/F/LT

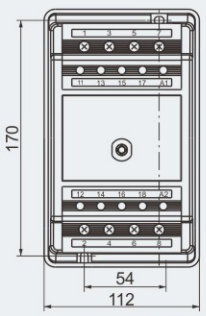

BL8060-□/4/□/□/LT
BL8060-□/3/□/□/F/LT
BL8060-□/4/□/□/F/LT

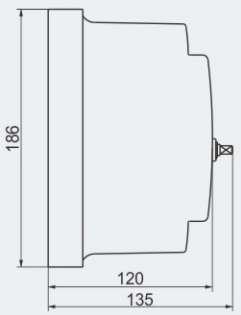

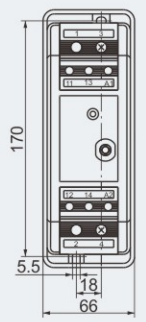

BL8060-□/2/□/□/L/LT

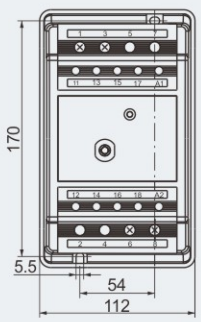

BL8060-□/2/□/□/L/LT
BL8060-□/2/□/□/L/F/LT

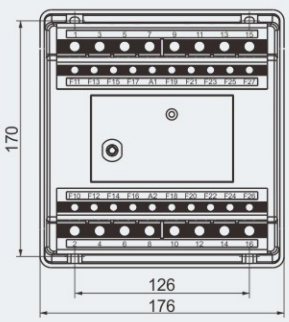

BL8060-□/3/□/□/L/LT
BL8060-□/4/□/□/L/LT
BL8060-□/3/□/□/L/F/LT
BL8060-□/4/□/□/L/F/LT

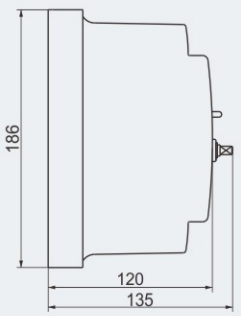

Selection table

Version	Rated voltage (V)	Rated current (A)	Rated residual operating current (mA)	Auxiliary contact	Schematic diagram
BL8060-□/1/□/□/□	230/440/690	1, 2, 4, 6, 10 16, 20, 25, 32 40, 50, 63	/	/	
BL8060-□/1/□/□/F	230/440/690		/	Indicating contact in OF state	
BL8060-□/2/□/□/□	230/440/690	1, 2, 4, 6, 10 16, 20, 25, 32 40, 50, 63	/	/	
BL8060-□/2/□/□/F	230/440/690		/	Indicating contact in OF state	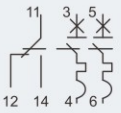
BL8060-□/2/□/□/L	230/440/690	40	30	/	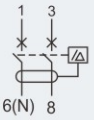
			300	/	
			300 S	/	
		63	30	/	
			300	/	
			300 S	/	
BL8060-□/3/□/□/□	230/440/690	1, 2, 4, 6, 10 16, 20, 25, 32 40, 50, 63	/	/	
BL8060-□/3/□/□/F	230/440/690		/	Indicating contact in OF state	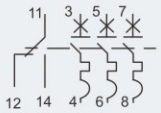
BL8060-□/4/□/□/□	230/440/690		/	/	
BL8060-□/4/□/□/F	230/440/690		/	Indicating contact in OF state	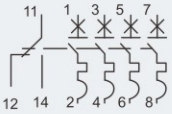

Technical data

Explosion-proof circuit breaker modules BL8060-d - □ / □/ □/ □/ □

Explosion protection	
Global (IECEx)	IECEx CQM 15.0016U
Gas	Ex db IIC Gb
Europe (ATEX)	TÜV CY 22 ATEX 0206668U
Gas	Ⓔx II 2 G Ex db IIC Gb
Certificates	IECEx; ATEX
Conformity to standards	EN 60079-0, EN 60079-1 IEC 60079-0, IEC 60079-1
Enclosure material	Copper-free Aluminium Alloy, powder coated surface
Rated voltage	Max. 690V AC, Max. 500V DC
Rated current	Max. 250A
Rated residual operating current	30mA, 300mA, 300mAⓈ Ⓢ:Under-voltage tripping(instant)
Rated residual current characteristics	AC, A
Mechanical life	20000 times
Auxiliary contact	1NO+1NC(Indicating contact in OFF state)
Number of pole	1P, 2P, 3P, 4P 1PL, 2PL, 3PL, 4PL (≤ 63A)
Ambient temperature	-40℃~+70℃

Breaking capacity

Ph.-Ph. (3P, 4P)		220~230V	380~415V	440V	500V	690V	Use breaking capacity
Rated current	63A	20kA	10kA	6kA	-	-	75%Icu
	80~160A	36kA					100%Icu
	100~250A	-			50kA		-

Dimension drawings (all dimensions in mm) - subject to alteration

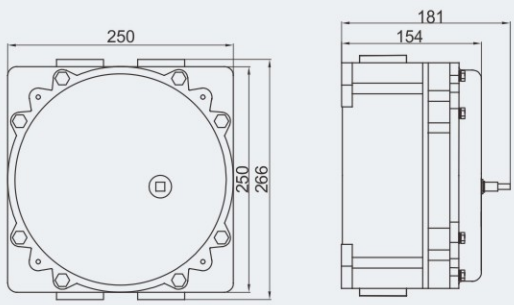

BL8060-d-□/1/□/□/L; BL8060-d-□/2/□/□/L
BL8060-d-□/3/□/□/L; BL8060-d-□/4/□/□/L
(≤ 63A)

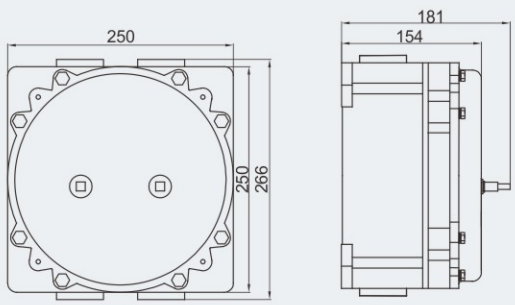

BL8060-d-□/1/□/□/L; BL8060-d-□/2/□/□/L
BL8060-d-□/1/□/□; BL8060-d-□/2/□/□
BL8060-d-□/3/□/□; BL8060-d-□/4/□/□
(≤ 63A)

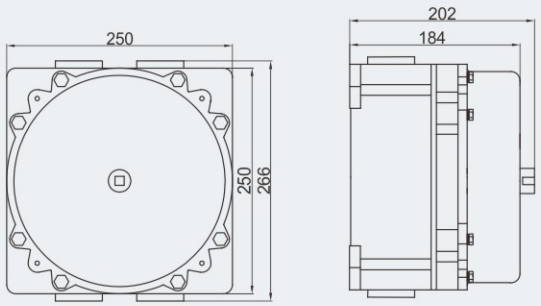

BL8060-d-□/3/□/□; BL8060-d-□/4/□/□
(80A~160A)

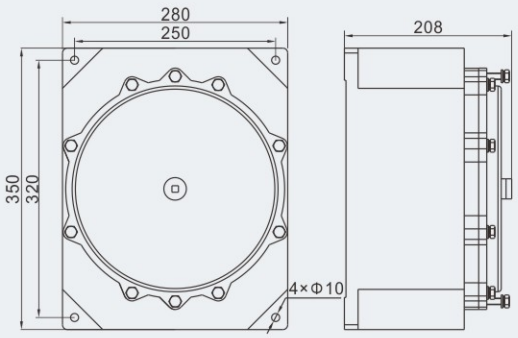

BL8060-d-□/3/□/□
(100A~250A)

Selection table

Version	Rated voltage (V)	Rated current (A)	Rated residual operating current (mA)	Auxiliary contact	Schematic diagram
BL8060-d-□/3/□/□/□	230/440/690	63, 80, 100, 125, 160, 250	/	/	
BL8060-d-□/3/□/□/F	230/440/690		/	Indicating contact in OF state	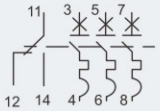
BL8060-d-□/3/□/□/L	230/440/690	63	30		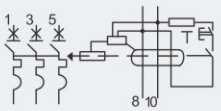
			300	/	
			300 Ⓢ		
BL8060-d-□/4/□/□/□	230/440/690	63, 80, 100, 125, 160, 250	/	/	
BL8060-d-□/4/□/□/F	230/440/690		/	Indicating contact in OF state	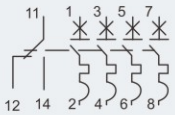
BL8060-d-□/4/□/□/L	230/440/690	63	30	/	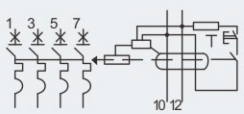
			300	/	
			300 Ⓢ	/	

Components for Distribution Boxes
BRT8060 Series Explosion-proof Fuses



- Explosion protection to
  -CENELEC
  -IEC
  -NEC
- Can be used in
  Zone 1 and Zone 2
  Class I, Zone 1 and Zone 2
  Class I, Division 2, Groups A , B, C, D
- The explosion-proof fuse is a safety device designed to protect circuits from damage caused by overloading and short-circuit currents.
- It features a specialized design and materials that ensure safe operation in environments prone to combustible or explosive conditions.
- This device is capable of quickly interrupting fault currents, safeguarding circuits and equipment from damage, and ensuring the safe operation of the system.

Catalogue number logic

BRT 8060 - □

- Rated current
- Design No.
- Explosion-proof fuses

Selection table

Version	Rated voltage (V)	Rated current (A)
BRT8060-1	230 400 500	1
BRT8060-2		2
BRT8060-4		4
BRT8060-6		6
BRT8060-8		8
BRT8060-10		10
BRT8060-16		16

Zones 1&2

Technical data

Explosion−proof fuses	BRT8060 - □
Explosion protection	
Global (IECEx)	IECEx CQM 23.0002U
Gas	Ex eb mb IIC Gb
Europe (ATEX)	CML 24 ATEX 3178U
Gas	Ⓔx II 2 G Ex eb mb IIC Gb
Certificates	IECEx; ATEX
Conformity to standards	EN 60079-0, EN 60079-7, EN 60079-18
	IEC 60079-0, IEC 60079-7, IEC 60079-18
Enclosure material	PC
Rated voltage	MAX. 500V AC/DC 50/60Hz
Rated current	0.5A, 0.63A, 0.8A, 1A, 1.25A, 1.6A, 2A, 2.5A, 3.15A, 4A, 5A, 6.3A, 8A, 10A, 12.5A, 16A
Ambient temperature	-60℃~+100℃

Dimension drawings (all dimensions in mm) - subject to alteration

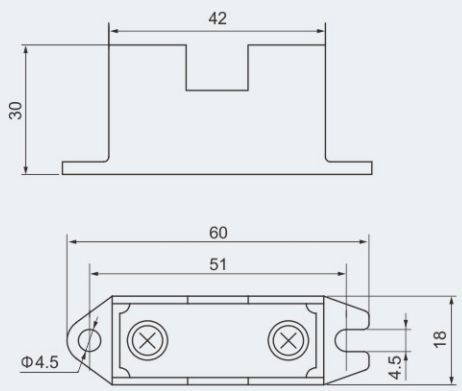

Empty Enclosures
BXT-□-W Series Explosion-proof Enclosures (Ex db IIB+H2)



- Explosion protection to
  -CENELEC
  -IEC
  -NEC
- Can be used in
  Zone 1 and Zone 2
  Zone 21 and Zone 22
  Class I, Zone 1 and Zone 2
  Class I, Division 1, Groups C, D
- Flameproof enclosure (Ex d IIB) in Copper-free Aluminium Alloy, formed of low pressure casting. 13 versions (external flange).
- Cable entries can be drilled and components can be installed by user on request.
- Safety shall be considered when installing components according to related electrical standards.
- Special requirements on request.

Catalogue number logic

BXT - □ - W

- External flange enclosure
- Specification code(I, II, IIB, III, IIIB, IV, IVB, V, VB, VI, VIB, VII, VIIB)
- Explosion-proof enclosures

Zones 1&2; 21&22

Technical data

Explosion-proof enclosures	BXT-□-W
Explosion protection	
Global (IECEx)	IECEx CQM 14.0011U
Gas and dust	Ex db IIB+H_2 Gb
	Ex tb IIIC Db IP66
Europe (ATEX)	LCIE 11 ATEX 3012U
Gas and dust	Ⓔx II 2 G Ex db IIB+H_2 Gb
	Ⓔx II 2 D Ex tb IIIC Db IP66
Certificates	IECEx; ATEX
Conformity to standards	EN 60079-0, EN 60079-1, EN 60079-31
	IEC 60079-0, IEC 60079-1, IEC 60079-31
Degree of protection	IP66
Internal&external earthing	I, II, IIB: M6/M6; III, IIIB, IV, IVB, V, VB, VI, VIB: M6/M8; VII, VIIB: M8/M8
Ambient temperature	-60℃~+200℃
Enclosure material	Copper-free Aluminium Alloy, powder coated surface, window grey (RAL7040)
Exposed fastener	Stainless steel
Mounting feet	Carbon steel, power coated surface
Hinge	With hinge

Selection table of BXT-□-W series explosion-proof enclosures (external flange)(all dimensions in mm)

Table of max. number of possible enclosure entries

	I		II		IIB		III		IIIB		IV		IVB	
	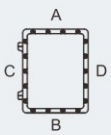													
Size	A/B	C/D	A/B	C/D	A/B	C/D	A/B	C/D	A/B	C/D	A/B	C/D	A/B	C/D
M20 x 1.5	5	8	5	10	5	12	10	12	16	20	12	16	22	30
M25 x 1.5	5	7	5	9	5	10	9	11	12	15	11	14	15	20
M32 x 1.5	2	3	2	4	2	6	7	9	9	12	9	12	12	16
M40 x 1.5	2	2	2	3	2	4	3	4	5	6	4	5	6	9
M50 x 1.5	1	2	1	3	1	3	3	3	4	5	3	4	5	7
M63 x 1.5	1	2	1	2	1	3	2	3	2	3	3	3	3	5

	V		VB		VI		VIB		VII		VIIB	
	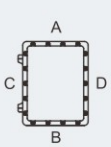											
Size	A/B	C/D	A/B	C/D	A/B	C/D	A/B	C/D	A/B	C/D	A/B	C/D
M20 x 1.5	14	21	24	40	20	35	30	50	30	40	45	65
M25 x 1.5	12	19	18	27	18	30	20	36	26	36	30	44
M32 x 1.5	10	15	14	21	15	26	18	30	20	30	25	36
M40 x 1.5	4	7	8	12	8	13	11	18	10	16	15	21
M50 x 1.5	4	5	5	9	6	11	6	10	8	12	12	12
M63 x 1.5	3	5	4	7	3	5	5	9	4	6	7	10

Empty Enclosures
BXT-□-W Series Explosion-proof Enclosures (Ex db IIB+H2)

Selection table of BXT-□-W series explosion-proof enclosures (external flange)(all dimensions in mm)

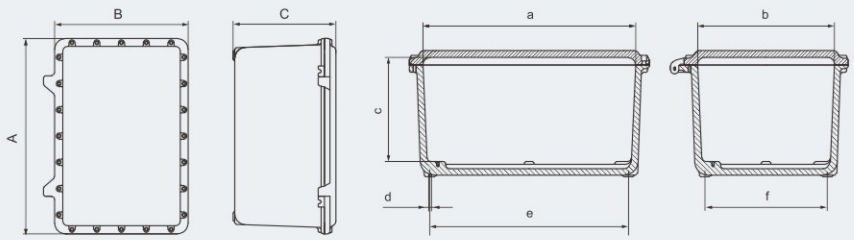

Enclosure

Version	Dimensions									Weight (kg)
	A	a	B	b	C	c	e	f	d	
BXT-I-W	250	192	200	142	170	131	180	130	M8	6.70
BXT-II-W	300	242	200	142	170	131	230	130	M8	8.00
BXT-IIB-W	350	292	200	142	170	131	280	130	M8	9.50
BXT-III-W	350	290	300	240	200	159	280	230	M10	14.50
BXT-IIIB-W	350	290	300	240	270	229	280	230	M10	17.50
BXT-IV-W	450	378	350	278	210	163	365	265	M10	23.00
BXT-IVB-W	450	378	350	278	280	233	365	265	M10	27.50
BXT-V-W	560	488	400	328	210	155	475	315	M10	34.50
BXT-VB-W	560	488	400	328	280	225	475	315	M10	39.50
BXT-VI-W	634	560	434	360	265	205	522	322	M10	46.00
BXT-VIB-W	634	560	434	360	335	275	522	322	M10	52.00
BXT-VII-W	720	640	560	480	275	215	620	460	M12	74.50
BXT-VIIB-W	720	640	560	480	345	285	620	460	M12	83.00

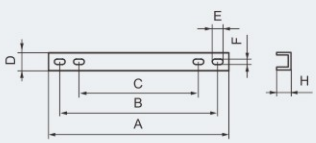

Mounting feet

Version	Dimensions						
	A	B	C	D	E	F	H
BXT-I-W	240	200	130	30	16	10	20
BXT-II-W	240	200	130	30	16	10	20
BXT-IIB-W	240	200	130	30	16	10	20
BXT-III-W	340	300	230	40	24	12	20
BXT-IIIB-W	340	300	230	40	24	12	20
BXT-IV-W	400	350	265	40	24	12	20
BXT-IVB-W	400	350	265	40	24	12	20
BXT-V-W	450	400	315	40	26	14	20
BXT-VB-W	450	400	315	40	26	14	20
BXT-VI-W	480	430	320	40	26	14	20
BXT-VIB-W	480	430	320	40	26	14	20
BXT-VII-W	620	560	460	50	26	14	20
BXT-VIIB-W	620	560	460	50	26	14	20

Selection table of BXT-□-W series explosion-proof enclosures (external flange)(all dimensions in mm)

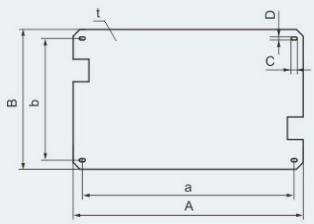

Mounting plate

Version	Dimensions						
	A	a	B	b	C	D	t
BXT-I-W	170	120	120	70	14	7	2
BXT-II-W	220	170	120	70	14	7	2
BXT-IIB-W	270	220	120	70	14	7	2
BXT-III-W	270	220	220	170	14	7	2
BXT-IIIB-W	270	220	220	170	14	7	2
BXT-IV-W	350	300	250	200	14	7	2
BXT-IVB-W	350	300	250	200	14	7	2
BXT-V-W	450	390	290	230	14	7	2
BXT-VB-W	450	390	290	230	14	7	2
BXT-VI-W	530	470	330	270	14	7	2
BXT-VIB-W	530	470	330	270	14	7	2
BXT-VII-W	600	550	440	390	14	7	2
BXT-VIIB-W	600	550	440	390	14	7	2

Empty Enclosures
BXT-□-W Series Explosion-proof Enclosures (Ex db IIB+H2)



- Explosion protection to
  -CENELEC
  -IEC
  -NEC
- Can be used in
  Zone 1 and Zone 2
  Zone 21 and Zone 22
  Class I, Zone 1 and Zone 2
  Class I, Division 1, Groups C, D
- Flameproof enclosure (Ex d IIB) in Copper-free Aluminium Alloy, formed of low pressure casting. 2 versions (external flange).
- Cable entries can be drilled and components can be installed by user on request.
- Safety shall be considered when installing components according to related electrical standards.
- Professionaly designed explosion-proof large enclosure provides space for more compnents.
- Adopting high-precision machining, excellent explosion-proof performance.
- Professionally designed door handles, reliable and safe when opening the door.
- Professionally designed hinges, reliable and safe when opening the door.
- Special requirements on request.

Catalogue number logic

BXT - □ - W

- W — External flange enclosure
- □ — Specification code(VIIIB, IXB)
- BXT — Explosion-proof enclosures

Technical data

Explosion-proof enclosures	BXT-□-W
Explosion protection	
Global (IECEx)	IECEx (applied for)
Gas and dust	Ex db IIB+H_2 Gb Ex tb IIIC Db
Europe (ATEX)	ATEX (applied for)
Gas and dust	Ⓔx II 2 G Ex db IIB+H_2 Gb Ⓔx II 2 D Ex tb IIIC Db
Certificates	IECEx; ATEX
Conformity to standards	EN 60079-0, EN 60079-1, EN 60079-31 IEC 60079-0, IEC 60079-1, IEC 60079-31
Degree of protection	IP66
Internal&external earthing	M8/M8
Ambient temperature	-60℃~+200℃
Enclosure material	Copper-free Aluminium Alloy, powder coated surface, window grey (RAL7040)
Exposed fastener	Stainless steel
Mounting feet	Carbon steel, power coated surface
Hinge	With hinge

Zones 1&2; 21&22

Selection table of BXT-□-W series explosion-proof enclosures (external flange)(all dimensions in mm)

BXT-VIIIB, IXB-W
Table of max. number of possible enclosure entries

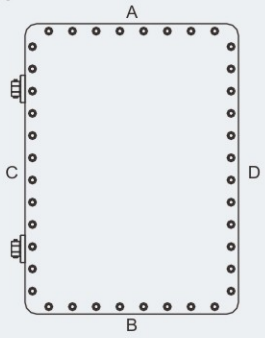

Type	A/B side		C/D side		Thread spec.
	Hole QTY	Hole distance range(mm)	Hole QTY	Hole distance range(mm)	
BXT-VIIIB-W	28	60~70	44	60~70	NPT 1/2", M20×1.5, NPT 1/2", M25×1.5
	18	80~90	24	80~90	NPT 1", M32×1.5, NPT 1 1/4", M40×1.5
	8	110~120	12	110~120	NPT 1 1/2", M50×1.5, NPT 2", M63×1.5
	3	230~240	4	230~240	NPT 2 1/2", M75×1.5
	2	230~240	3	230~240	NPT 3", M90×1.5
	2	230~240	3	230~240	NPT 4", M115×1.5
BXT-IXB-W	45	60~70	70	60~70	NPT 1/2", M20×1.5, NPT 3/4", M25×1.5
	24	80~90	32	80~90	NPT 1", M32×1.5, NPT 1 1/4", M40×1.5
	15	110~120	24	110~120	NPT 1 1/2", M50×1.5, NPT 2", M63×1.5
	3	230~240	5	230~240	NPT 2 1/2", M75×1.5
	3	230~240	4	230~240	NPT 3", M90×1.5
	2	230~240	4	230~240	NPT 4", M115×1.5

Dimension drawings (all dimensions in mm) - subject to alteration

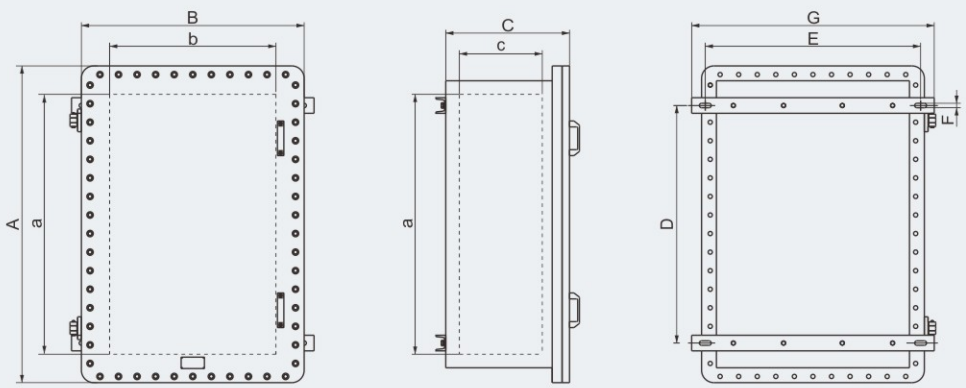

Model	A	B	C	a	b	c	D	E	F	G
BXT-VIIIB-W	980	720	425	800	540	270	660	690	18	800
BXT-IXB-W	1280	900	500	1050	670	330	960	870	18	980

Empty Enclosures
BXT-e Series Increased Safety Enclosures (Ex e IIC)



- Explosion protection to
  - -CENELEC
  - -IEC
  - -NEC
- Can be used in
  - Zone 1 and Zone 2
  - Zone 21 and Zone 22
  - Class I, Zone 1 and Zone 2
  - Class I, Division 2, Groups A , B, C, D
- Copper-free Aluminium Alloy enclosure (Ex e IIC), 8 versions.
- Cable entries can be drilled and components can be installed by user on request.
- Safety shall be considered when installing components according to related electrical standards.
- Special requirements on request.

Catalogue number logic

BXT - e - □

- Specification code (I, II, III, IV, V, VI, VII, VIII)
- Increased safety enclosures

Technical data

Increased safety enclosures	BXT-e-□
Explosion protection	
Global (IECEx)	IECEx CQM 13.0036U
Gas and dust	Ex e IIC Gb
	Ex tb IIIC Db IP66
Europe (ATEX)	LCIE 13 ATEX 3053X
Gas and dust	Ⓔx II 2 G Ex e IIC Gb
	Ⓔx II 2 D Ex tb IIIC Db IP66
Certificates	IECEx; ATEX
Conformity to standards	EN 60079-0, EN 60079-7, EN 60079-31
	IEC 60079-0, IEC 60079-7, IEC 60079-31
Degree of protection	IP66
Internal&external earthing	M6/M6
Ambient temperature	-60℃~+100℃
Enclosure material	Copper-free Aluminium Alloy, powder coated surface, window grey (RAL7040)
Exposed fastener	Stainless steel

Zones 1&2; 21&22

Selection table of BXT-e series increased safety enclosures (all dimensions in mm)

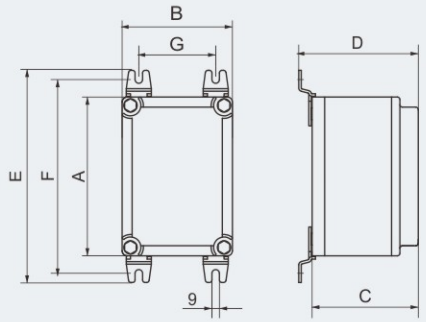

BXT-e-I~BXT-e-IV

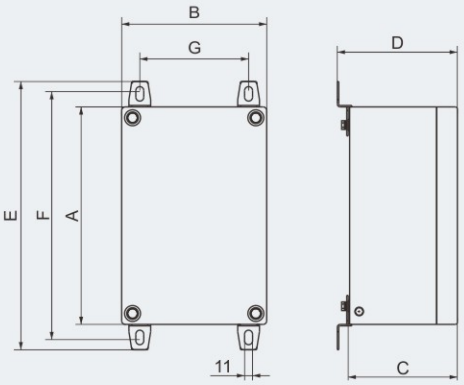

BXT-e-V~BXT-e-VIII

Outline & Installation

Version	Outline dimensions				Installation dimensions		
	A	B	C	D	E	F	G
BXT-e-I	190	132	128	143	252	232	92
BXT-e-II	190	190	128	143	252	232	150
BXT-e-III	250	190	128	143	312	292	150
BXT-e-IV	250	250	128	143	312	292	210
BXT-e-V	300	190	151	164	370	342	150
BXT-e-VI	300	280	151	164	370	342	250
BXT-e-VII	350	250	151	164	420	392	200
BXT-e-VIII	502	350	151	164	572	544	300

Note: Other dimensions on request

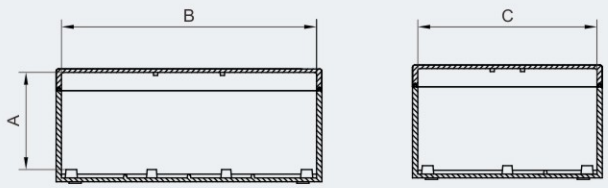

Internal

Version	Dimensions			Weight (kg)
	A	B	C	
BXT-e-I	108	177	120	2.40
BXT-e-II	107	177	177	2.80
BXT-e-III	107	237	177	3.80
BXT-e-IV	107	235	235	5.10
BXT-e-V	130	286	179	5.80
BXT-e-VI	130	286	269	7.10
BXT-e-VII	130	336	236	7.00
BXT-e-VIII	130	488	336	9.50

Empty Enclosures
BX-e Series Empty Enclosure (Ex eb IIC)



- Explosion protection to
  - -CENELEC
  - -IEC
  - -NEC
- Can be used in
  - Zone 1 and Zone 2
  - Zone 21 and Zone 22
  - Class I, Zone 1 and Zone 2
  - Class I, Division 2, Groups A , B, C, D
- Empty enclosure (Ex eb IIC) in stainless steel or carbon steel 37 versions.
- Cable entries can be drilled and components can be installed by user on request.
- Safety shall be considered when installing components according to related electrical standards.
- Special requirements on request.

Catalogue number logic

BX - e / □ □

- □ □ — Product numbers: 001, 002, 003 ..... 035, 036, 037
- □ — Enclosure material: II. carbon steel, III. stainless steel
- e — Explosion proof type: e
- BX - — Empty enclosure

Technical data

Empty enclosure	BX-e/□□
Explosion protection	
Global (IECEx)	IECEx CQM 24.0010U
Gas and dust	Ex eb IIC Gb Ex tb IIIC Db
Europe (ATEX)	ExVeritas 24 ATEX 1876U
Gas and dust	Ⓔx II 2 G Ex eb IIC Gb Ⓔx II 2 D Ex tb IIIC Db
Certificates	IECEx; ATEX
Conformity to standards	EN 60079-0, EN 60079-7, EN 60079-31 IEC 60079-0, IEC 60079-7, IEC 60079-31
Degree of protection	IP66
Internal&external earthing	M6/M8/M10
Service temperature	-60℃~+110℃
Enclosure material	Stainless steel or carbon steel
Exposed fastener	Stainless steel
Mounting	Surface type, pedestal type

Zones 1&2; 21&22

Selection table of BX-e series empty enclosure (all dimensions in mm)

Surface type

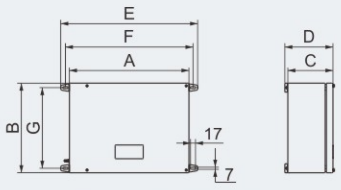

BX-e/II(III) 001-013

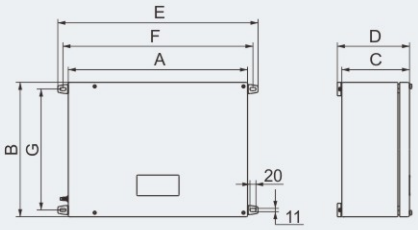

BX-e/II(III) 014-019

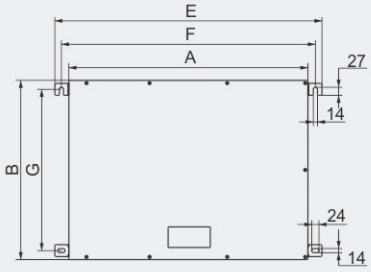

BX-e/II(III) 020-022

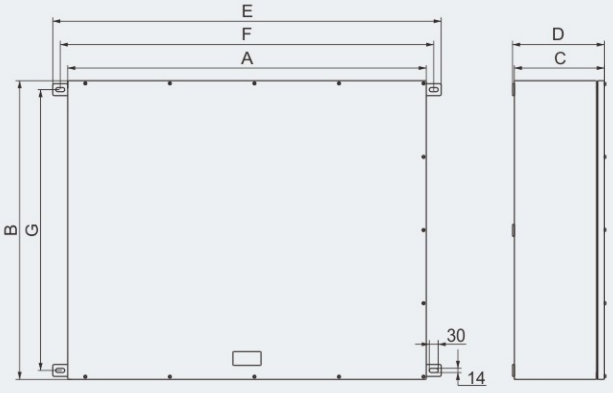

BX-e/II(III) 023

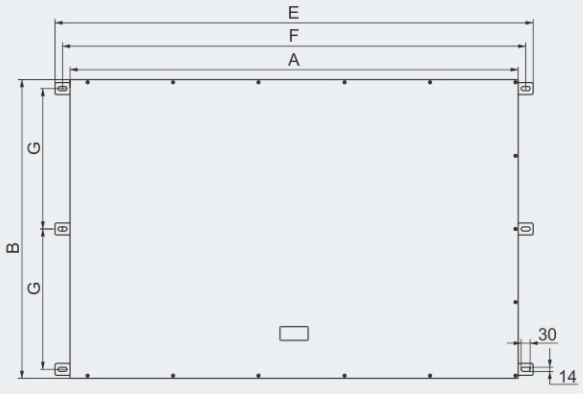

BX-e/II(III) 024

Model specifications	External dimensions A×B×C	D	E	Installation dimensions F×G	Model specifications	External dimensions A×B×C	D	E	Installation dimensions F×G
BX-e/II(III) 001	170×150×110	120	228	198×120	BX-e/II(III) 013	360×360×165	175	418	388×330
BX-e/II(III) 002	220×180×110	120	278	248×150	BX-e/II(III) 014	500×400×200	210	570	536×366
BX-e/II(III) 003	300×200×110	120	358	328×170	BX-e/II(III) 015	500×400×300	310	570	436×466
BX-e/II(III) 004	300×200×125	135	358	328×170	BX-e/II(III) 016	480×480×150	160	550	516×446
BX-e/II(III) 005	360×220×125	135	418	388×190	BX-e/II(III) 017	480×480×250	260	550	516×446
BX-e/II(III) 006	360×220×165	175	418	388×190	BX-e/II(III) 018	600×500×200	210	670	636×466
BX-e/II(III) 007	250×250×150	160	308	278×220	BX-e/II(III) 019	600×500×300	310	670	636×466
BX-e/II(III) 008	300×300×150	160	358	328×270	BX-e/II(III) 020	800×600×200	218	894	850×540
BX-e/II(III) 009	300×300×200	210	358	328×270	BX-e/II(III) 021	800×600×300	318	894	850×640
BX-e/II(III) 010	300×400×150	160	358	328×370	BX-e/II(III) 022	1000×800×300	318	1094	1050×740
BX-e/II(III) 011	300×400×200	210	358	328×370	BX-e/II(III) 023	1200×1000×300	306	1300	1250×940
BX-e/II(III) 012	360×360×125	135	418	388×330	BX-e/II(III) 024	1500×1000×400	406	1600	1550×(470+470)

Empty Enclosures
BX-e Series Empty Enclosure (Ex eb IIC)

Selection table of BX-e series empty enclosure (all dimensions in mm)

Surface type

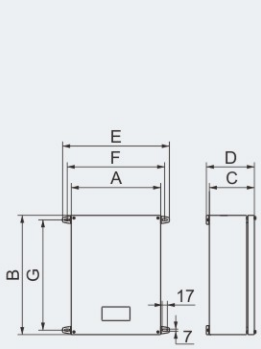

BX-e/II(III) 001-013

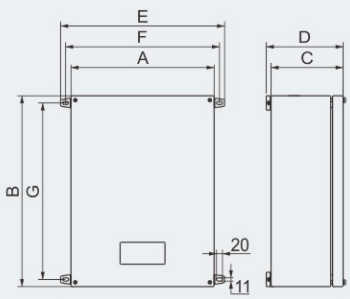

BX-e/II(III) 014-019

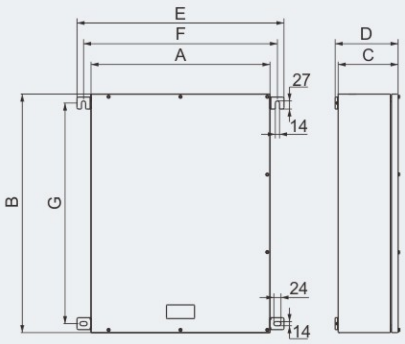

BX-e/II(III) 020-022

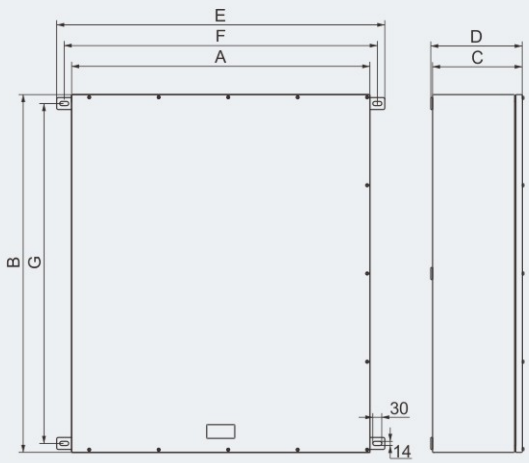

BX-e/II(III) 023

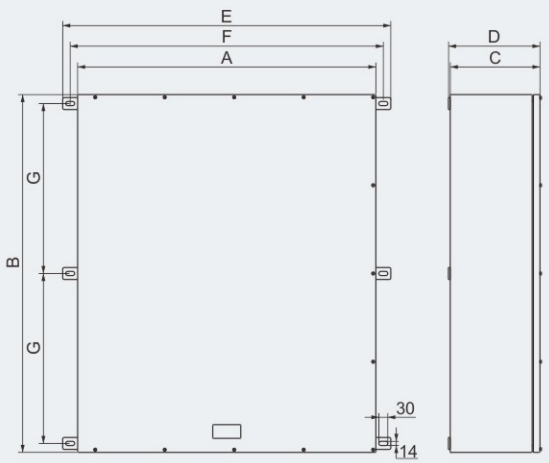

BX-e/II(III) 024

Model specifications	External dimensions A×B×C	D	E	Installation dimensions F×G	Model specifications	External dimensions A×B×C	D	E	Installation dimensions F×G
BX-e/II(III) 001	150×170×110	120	208	178×140	BX-e/II(III) 013	360×360×165	175	418	388×330
BX-e/II(III) 002	180×220×110	120	238	208×190	BX-e/II(III) 014	400×500×200	210	470	436×466
BX-e/II(III) 003	200×300×110	120	258	228×270	BX-e/II(III) 015	400×500×300	310	470	436×466
BX-e/II(III) 004	200×300×125	135	258	228×270	BX-e/II(III) 016	480×480×150	160	550	516×446
BX-e/II(III) 005	220×360×125	135	278	248×330	BX-e/II(III) 017	480×480×250	260	550	516×446
BX-e/II(III) 006	220×360×165	175	278	248×330	BX-e/II(III) 018	500×600×200	210	570	536×566
BX-e/II(III) 007	250×250×150	160	308	278×220	BX-e/II(III) 019	500×600×300	310	570	536×566
BX-e/II(III) 008	300×300×150	160	358	328×270	BX-e/II(III) 020	600×800×200	218	694	650×740
BX-e/II(III) 009	300×300×200	210	358	328×270	BX-e/II(III) 021	600×800×300	318	694	650×740
BX-e/II(III) 010	300×400×150	160	358	328×370	BX-e/II(III) 022	800×1000×300	318	894	850×940
BX-e/II(III) 011	300×400×200	210	358	328×370	BX-e/II(III) 023	1000×1200×300	306	1100	1050×1140
BX-e/II(III) 012	360×360×125	135	418	388×330	BX-e/II(III) 024	1000×1500×400	406	1100	1050×(720+720)

Selection table of BX-e series empty enclosure (all dimensions in mm)

Pedestal type

1. Single door

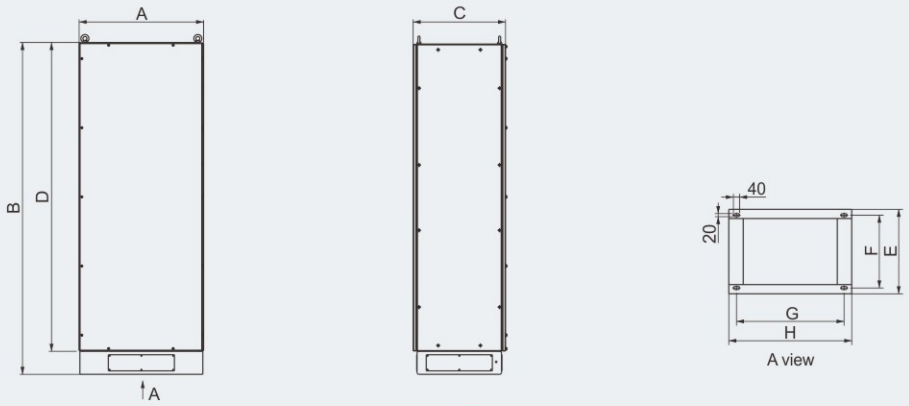

2. Double door

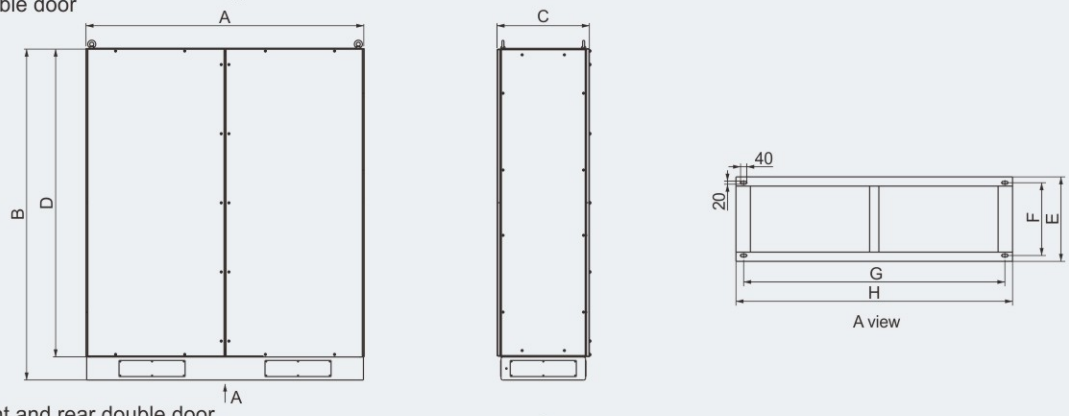

3. Front and rear double door

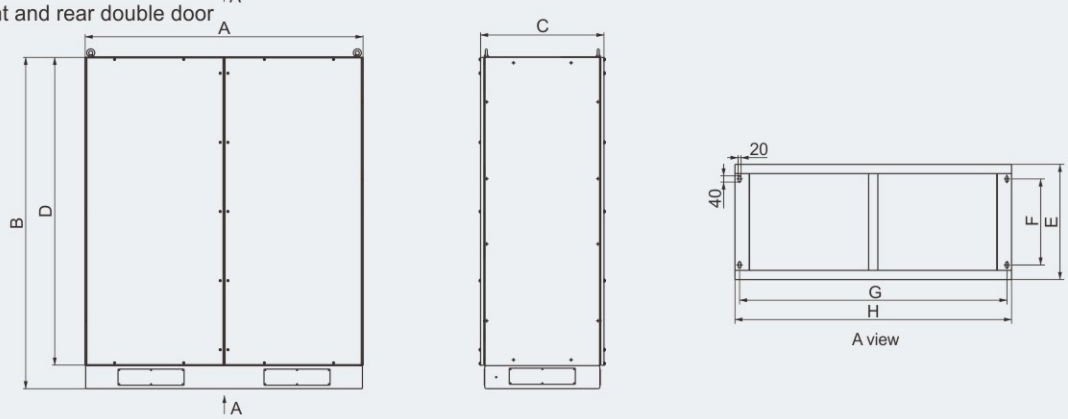

Model and Specifications	Dimensions A×B×C	Base Dimensions E×H	Base Mounting Dimensions G×F	Cabinet Height D	Note
BX-e/II(III) 025	600×1800×400	600×350	500×274	2010	Single door
BX-e/II(III) 026	800×1800×400	800×350	700×274	2010	
BX-e/II(III) 027	800×2000×400	800×350	700×274	2210	
BX-e/II(III) 028	800×2000×600	800×550	700×474	2210	
BX-e/II(III) 029	1000×2000×600	1000×550	920×474	2210	Double door
BX-e/II(III) 030	1000×1800×400	1000×350	900×274	2010	
BX-e/II(III) 031	1200×1800×400	1200×350	1100×274	2010	
BX-e/II(III) 032	1600×1800×400	1600×350	1500×274	2010	
BX-e/II(III) 033	1200×2000×400	1200×350	1100×274	2210	
BX-e/II(III) 034	1200×2000×600	1200×550	1100×474	2210	
BX-e/II(III) 035	1800×2000×600	1800×550	1700×474	2210	
BX-e/II(III) 036	1200×2000×800	1200×750	1140×560	2210	Front and rear double door
BX-e/II(III) 037	1800×2000×800	1800×750	1740×560	2210	

Empty Enclosures
BXT8050 Series Explosion-proof Enclosures (Ex e)



- Explosion protection to
  - -CENELEC
  - -IEC
  - -NEC
- Can be used in
  - Zone 1 and Zone 2
  - Class I, Zone 1 and Zone 2
  - Class I, Division 2, Groups A , B, C, D
- Increased-safety enclosure (Ex e) in GRP; 5 versions.
- Cable entries can be drilled and components can be installed by user on request.
- Safety shall be considered when installing components according to related electrical standards.
- Special requirements on request.

Catalogue number logic

BXT 8050-□

- Specification code (I, II , III, IV, V)
- Design No.
- Explosion-proof enclosures

Technical data

Explosion-proof enclosures	BXT8050-□
Explosion protection	
Europe (ATEX)	LCIE 09 ATEX 3095U
Gas	Ⓔx II 2 G Ex e II
Certificates	ATEX
Conformity to standards	EN 60079-0, EN 60079-7
	IEC 60079-0, IEC 60079-7
Degree of protection	IP54
Ambient temperature	-20℃~+60℃
Enclosure material	GRP (glass fibre-reinforced polyester resin)
Exposed fastener	Stainless steel

Zones 1&2

Selection table of BXT8050 series explosion-proof enclosures (all dimensions in mm)

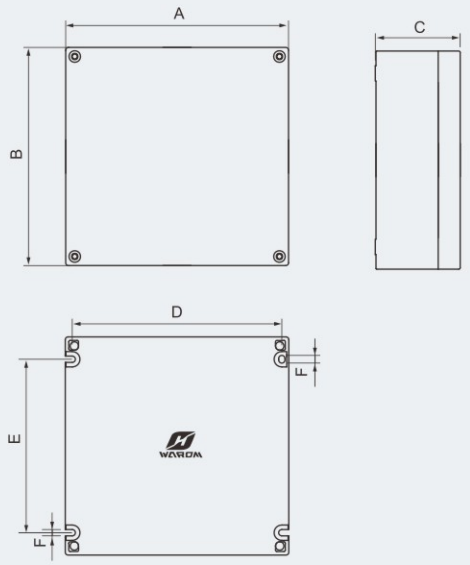

Outline & Installation

Version	Outline dimensions			Installation dimensions		
	A	B	C	D	E	F
BXT8050-I	110	139	98	96	91	6.5
BXT8050-II	130	220	109	116	172	6.5
BXT8050-III	179	260	121	163	200	7
BXT8050-IV	220	360	121	200	296	9
BXT8050-V	360	360	121	340	296	9

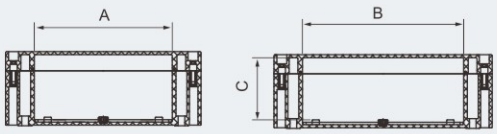

Internal

Version	Dimensions			Weight (kg)
	A	B	C	
BXT8050-I	104	104	63	1.20
BXT8050-II	148	94	90	1.30
BXT8050-III	130	174	102	2.10
BXT8050-IV	169	266	102	3.25
BXT8050-V	266	309	102	4.25

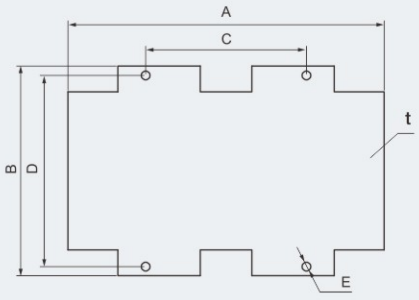

Mounting plate

Version	Dimensions					
	A	B	C	D	E	t
BXT8050-I	-	-	-	-	-	-
BXT8050-II	204	114	190	-	Φ7	2
BXT8050-III	240	159	122	145	Φ7	2
BXT8050-IV	322	188	282	142	Φ7	2
BXT8050-V	332	316	282	282	Φ7	2

7

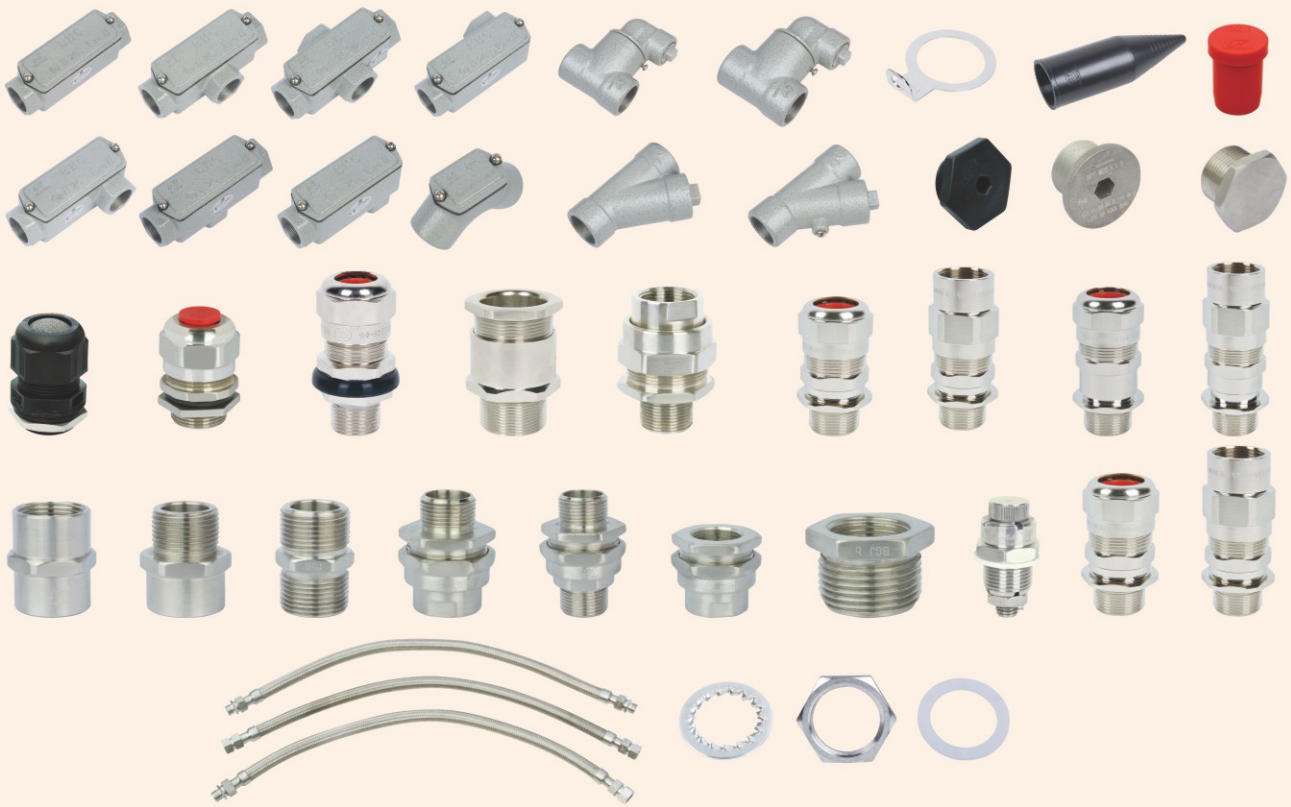

Cable Glands and Bushings

Contents

Accessories for Installation

BHC Series Explosion-proof Aluminium Alloy Bushings (Ex eb IIC) 7/2

BHC Series Explosion-proof Cast Iron Bushings (Ex eb IIC) 7/5

BGJ Series Explosion-proof Connectors (Ex db IIC, Ex eb IIC) 7/8

BGJ-w Series Explosion-Proof Right Angle Connectors (Ex db IIC, Ex eb IIC) 7/12

BAG Series Explosion-proof Seal Bushings (Ex db IIC, Ex eb IIC) 7/14

Cable Glands

DQM-I Series Explosion-proof Cable Glands (Ex eb IIC) 7/18

DQM-II Series Explosion-proof Cable Glands (Ex d IIC, Ex e IIC) 7/22

DQM-III/I Series Explosion-proof Cable Glands (Ex db IIC, Ex eb IIC) 7/28

DQM-III/II Series Explosion-proof Cable Glands (Ex db IIC, Ex eb IIC) 7/30

DQM-CF Series Explosion-proof Cable Glands (Ex db IIC, Ex eb IIC) 7/32

Flexible Conduits

BNG Series Stainless Steel Explosion-proof Flexible Conduits (Ex d IIC) 7/34

Accessories 7/36

More products are under development. Please contact us or visit our website for the latest product development. We reserve the right to make alteration to the technical data, weight, dimensions, designs and products available without notice.

Accessories for Installation
BHC Series Explosion-proof Aluminium Alloy Bushings



- Explosion protection to
  - -CENELEC
  - -IEC
  - -NEC
- Can be used in
  - Zone 1 and Zone 2
  - Zone 21 and Zone 22
  - Class I, Zone 1 and Zone 2
  - Class I, Division 2, Groups A , B, C, D
- Ex e enclosure, copper-free Aluminium Alloy, powder coated surface.
- Widely used for connection in steel pipe wiring system.

Catalogue number logic

BHC - □ □ □

- Size
- Thread
  - M: Metric thread
  - NPT: NPT thread
  - G: Pipe thread
- Type: A, B, C, D, E, F, G, H
- Explosion-proof bushings

Technical data

Explosion-proof aluminium alloy bushings BHC-□□□

Explosion protection	
Global (IECEx)	IECEx CNEX 18.0028U
Gas and dust	Ex eb IIC Gb Ex tb IIIC Db
Europe (ATEX)	CNEX 18 ATEX 0022U
Gas and dust	Ⓔx II 2 G Ex eb IIC Gb Ⓔx II 2 D Ex tb IIIC Db
Certificates	IECEx; ATEX; CU-TR
Conformity to standards	EN 60079-0, EN 60079-7, EN 60079-31 IEC 60079-0, IEC 60079-7, IEC 60079-31
Enclosure material	Copper-free Aluminium Alloy, powder coated surface.
Enclosure colour	Window grey (RAL7040)
Degree of protection	IP66
Ambient temperature	-60℃~+100℃
Type	A, B, C, D, E, F, G, H
Connection thread	1. Metric thread is standard type; G thread or NPT thread is optional. 2. Metric threads are 1.5mm pitch as standard, others thread pitch can be customized, please specify when ordering.

Note：M75, M90, M115 equivalent G thread and NPT thread can be customized.

Zones 1&2; 21&22

Accessories for Installation
BHC Series Explosion-proof Aluminium Alloy Bushings

Selection table

Version	Female thread "A"			Dimensions (mm)			Ordering code	Weight (kg)
	Metric	NPT	G	W	H	L		
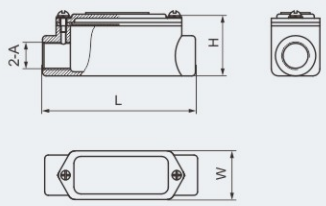 Type A	M20	1/2"	1/2"	35	45	110	701001	0.15
	M25	3/4"	3/4"	38	49	118	701002	0.20
	M32	1"	1"	45	54	145	701003	0.35
	M40	1 1/4"	1 1/4"	54	65	170	701004	0.50
	M50	1 1/2"	1 1/2"	60	71	176	701005	0.60
	M63	2"	2"	72	83	204	701006	0.65
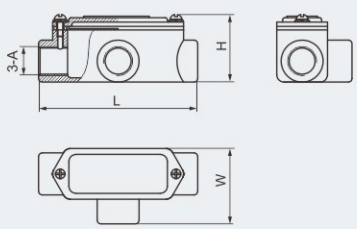 Type B	M20	1/2"	1/2"	52	45	110	701007	0.20
	M25	3/4"	3/4"	55	49	118	701008	0.20
	M32	1"	1"	63.5	54	145	701009	0.35
	M40	1 1/4"	1 1/4"	71	65	170	701010	0.50
	M50	1 1/2"	1 1/2"	80	71	176	701011	0.65
	M63	2"	2"	93.5	83	204	701012	1.20
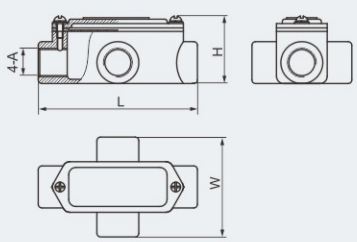 Type C	M20	1/2"	1/2"	69	45	110	701013	0.20
	M25	3/4"	3/4"	72	49	118	701014	0.25
	M32	1"	1"	80	54	145	701015	0.40
	M40	1 1/4"	1 1/4"	88	65	170	701016	0.55
	M50	1 1/2"	1 1/2"	100	71	176	701017	0.65
	M63	2"	2"	115	83	204	701018	1.20
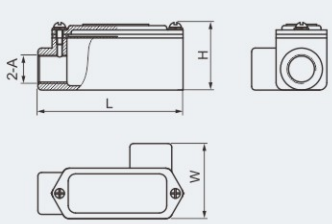 Type D	M20	1/2"	1/2"	52	45	101	701019	0.20
	M25	3/4"	3/4"	55	49	108	701020	0.20
	M32	1"	1"	63	54	135	701021	0.35
	M40	1 1/4"	1 1/4"	71	65	162.5	701022	0.50
	M50	1 1/2"	1 1/2"	80	71	165.5	701023	0.60
	M63	2"	2"	93.5	83	194.5	701024	1.20

Accessories for Installation
BHC Series Explosion-proof Aluminium Alloy Bushings

Selection table

Version	Female thread "A"			Dimensions (mm)			Ordering code	Weight (kg)
	Metric	NPT	G	W	H	L		
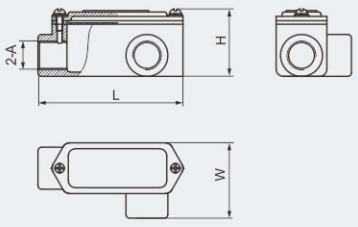 Type E	M20	1/2"	1/2"	52	45	101	701025	0.20
	M25	3/4"	3/4"	55	49	108	701026	0.20
	M32	1"	1"	63	54	135	701027	0.35
	M40	1 1/4"	1 1/4"	71	65	162.5	701028	0.50
	M50	1 1/2"	1 1/2"	80	71	165.5	701029	0.60
	M63	2"	2"	93.5	83	194.5	701030	1.20
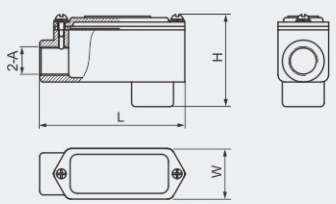 Type F	M20	1/2"	1/2"	35	62	101	701031	0.20
	M25	3/4"	3/4"	38	66	108	701032	0.20
	M32	1"	1"	46	71	135	701033	0.50
	M40	1 1/4"	1 1/4"	54	82	162.5	701034	0.50
	M50	1 1/2"	1 1/2"	60	91	165.5	701035	0.60
	M63	2"	2"	72	104	194.5	701036	1.15
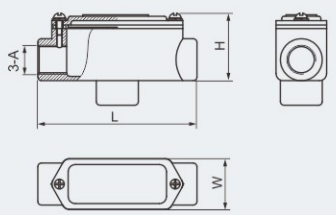 Type G	M20	1/2"	1/2"	35	62	110	701037	0.20
	M25	3/4"	3/4"	38	66	118	701038	0.20
	M32	1"	1"	46	71	145	701039	0.35
	M40	1 1/4"	1 1/4"	54	82	170	701040	0.50
	M50	1 1/2"	1 1/2"	60	91	176	701041	0.60
	M63	2"	2"	72	104	204	701042	1.20
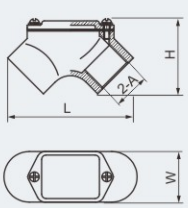 Type H	M20	1/2"	1/2"	30	51	84	701043	0.10
	M25	3/4"	3/4"	35	53	89	701044	0.15
	M32	1"	1"	41	64	108	701045	0.25
	M40	1 1/4"	1 1/4"	51	69	116	701046	0.25
	M50	1 1/2"	1 1/2"	57	76	130	701047	0.35
	M63	2"	2"	70	95	168	701048	0.55

Accessories for Installation
BHC Series Explosion-proof Cast Iron Bushings

- Explosion protection to
  - -CENELEC
  - -IEC
  - -NEC
- Can be used in
  - Zone 1 and Zone 2
  - Zone 21 and Zone 22
  - Class I, Zone 1 and Zone 2
  - Class I, Division 2, Groups A , B, C, D
- Ex e enclosure, cast iron, powder coated surface.
- Widely used for connection in steel pipe wiring system.

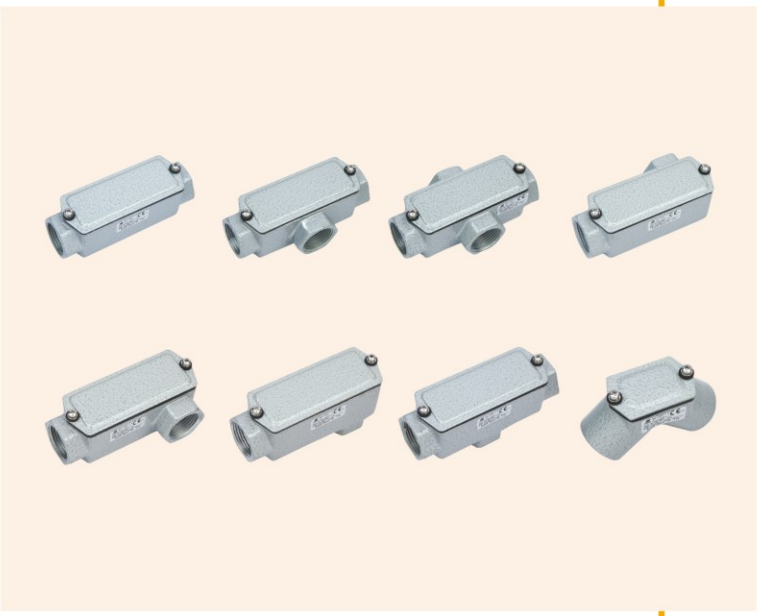

Catalogue number logic

BHC - □ □ □

- Size
- Thread
  - M: Metric thread
  - NPT: NPT thread
  - G: Pipe thread
- Type: A, B, C, D, E, F, G, H
- Explosion-proof bushings

Technical data

Explosion-proof cast iron bushings BHC-□□□

Explosion protection	
Global (IECEx)	IECEx CNEX 18.0028U
Gas and dust	Ex eb IIC Gb
	Ex tb IIIC Db
Europe (ATEX)	CNEX 18 ATEX 0022U
Gas and dust	Ⓔx II 2 G Ex eb IIC Gb
	Ⓔx II 2 D Ex tb IIIC Db
Certificates	IECEx; ATEX; CU-TR
Conformity to standards	EN 60079-0, EN 60079-7, EN 60079-31
	IEC 60079-0, IEC 60079-7, IEC 60079-31
Enclosure material	Cast iron, powder coated surface.
Enclosure colour	Window grey (RAL7040)
Degree of protection	IP66
Ambient temperature	-60℃~+100℃
Type	A, B, C, D, E, F, G, H
Connection thread	1. Metric thread is standard type; G thread or NPT thread is optional. 2. Metric threads are 1.5mm pitch as standard, others thread pitch can be customized, please specify when ordering.

Note：M75, M90, M115 equivalent G thread and NPT thread can be customized.

Zones 1&2; 21&22

Accessories for Installation
BHC Series Explosion-proof Cast Iron Bushings

Selection table

Version	Female thread "A"			Dimensions (mm)			Ordering code	Weight (kg)
	Metric	NPT	G	W	H	L		
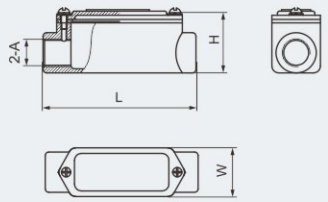 Type A	M20	1/2"	1/2"	31	37	106	702001	0.55
	M25	3/4"	3/4"	35	42	120	702002	0.65
	M32	1"	1"	44	52	138	702003	0.85
	M40	1 1/4"	1 1/4"	53	62	164	702004	1.25
	M50	1 1/2"	1 1/2"	60	67	175	702005	1.50
	M63	2"	2"	75	82	200	702006	2.65
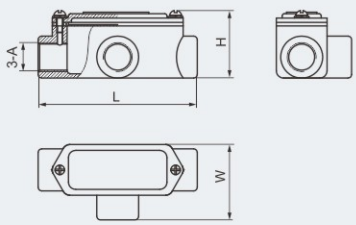 Type B	M20	1/2"	1/2"	45	37	106	702007	0.60
	M25	3/4"	3/4"	50	42	120	702008	0.75
	M32	1"	1"	60	52	138	702009	1.00
	M40	1 1/4"	1 1/4"	73	62	164	702010	1.30
	M50	1 1/2"	1 1/2"	80	67	175	702011	1.60
	M63	2"	2"	95	82	200	702012	2.85
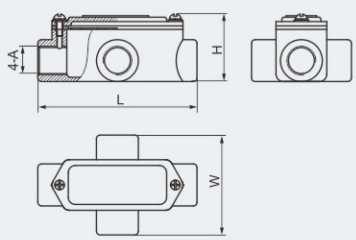 Type C	M20	1/2"	1/2"	59	37	106	702013	0.65
	M25	3/4"	3/4"	65	42	120	702014	0.80
	M32	1"	1"	76	52	138	702015	1.15
	M40	1 1/4"	1 1/4"	93	62	164	702016	1.40
	M50	1 1/2"	1 1/2"	100	67	175	702017	1.70
	M63	2"	2"	115	82	200	702018	2.80
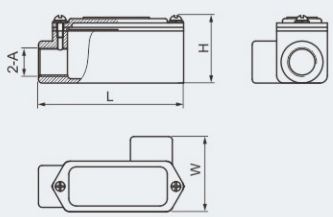 Type D	M20	1/2"	1/2"	45	37	98.5	702019	0.55
	M25	3/4"	3/4"	50	42	110	702020	0.75
	M32	1"	1"	60	52	126	702021	0.85
	M40	1 1/4"	1 1/4"	73	62	149	702022	1.25
	M50	1 1/2"	1 1/2"	80	67	159	702023	1.55
	M63	2"	2"	95	82	183.5	702024	3.00

Accessories for Installation
BHC Series Explosion-proof Cast Iron Bushings

Selection table

Version	Female thread "A"			Dimensions (mm)			Ordering code	Weight (kg)
	Metric	NPT	G	W	H	L		
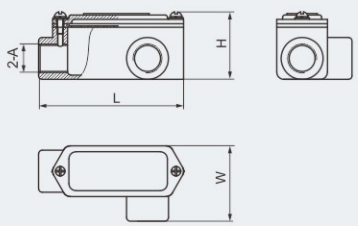 Type E	M20	1/2"	1/2"	45	37	98.5	702025	0.55
	M25	3/4"	3/4"	50	42	110	702026	0.75
	M32	1"	1"	60	52	126	702027	0.90
	M40	1 1/4"	1 1/4"	73	62	149	702028	1.25
	M50	1 1/2"	1 1/2"	80	67	159	702029	1.65
	M63	2"	2"	95	82	183.5	702030	2.50
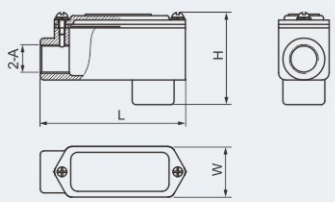 Type F	M20	1/2"	1/2"	31	41	98.5	702031	0.55
	M25	3/4"	3/4"	35	57	110	702032	0.65
	M32	1"	1"	44	68	126	702033	0.95
	M40	1 1/4"	1 1/4"	53	82	149	702034	1.25
	M50	1 1/2"	1 1/2"	60	87	159	702035	1.55
	M63	2"	2"	75	102	183.5	702036	2.85
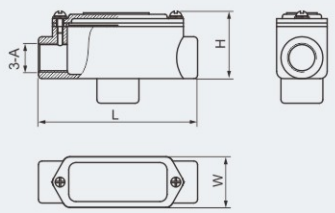 Type G	M20	1/2"	1/2"	31	41	106	702037	0.55
	M25	3/4"	3/4"	35	57	120	702038	0.70
	M32	1"	1"	44	68	138	702039	0.95
	M40	1 1/4"	1 1/4"	53	82	164	702040	1.25
	M50	1 1/2"	1 1/2"	60	87	185	702041	1.25
	M63	2"	2"	75	102	200	702042	2.75
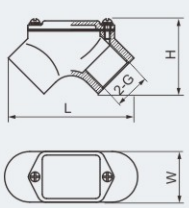 Type H	M20	1/2"	1/2"	28	46	84	702043	0.30
	M25	3/4"	3/4"	33	50	86	702044	0.30
	M32	1"	1"	40	58	99	702045	0.45
	M40	1 1/4"	1 1/4"	48	78	122	702046	0.65
	M50	1 1/2"	1 1/2"	56	82	129	702047	0.80
	M63	2"	2"	69	78	158	702048	1.55

Accessories for Installation
BGJ Series Explosion-proof Connectors



- Explosion protection to
  -CENELEC
  -IEC
- Can be used in
  Zone 1 and Zone 2
  Zone 21 and Zone 22
- Available in nickel plated brass, stainless steel or galvanized carbon steel.

Catalogue number logic

BGJ - □ □ □ (□)/□ □ (□)

- M: Male thread
- F: Female thread
- Size
- Thread
  - M: Metric thread
  - NPT: NPT thread
  - G: Pipe thread
- M: Male thread
- F: Female thread
- Size
- Thread
  - M: Metric thread
  - NPT: NPT thread
  - G: Pipe thread
- Function
  - I: Pipe connector
  - II: Reducer
  - III: Connector
- Explosion-proof connectors

Technical data

Explosion-proof connectors	BGJ-□□□(□)/□□(□)
Explosion protection	
Global (IECEx)	
Gas and dust	IECEx CNEX 18.0038U
	Ex db IIC Gb
	Ex eb IIC Gb
	Ex tb IIIC Db
Europe (ATEX)	CNEX 18 ATEX 0030U
Gas and dust	Ⓔx II 2 G Ex db IIC Gb
	Ⓔx II 2 G Ex eb IIC Gb
	Ⓔx II 2 D Ex tb IIIC Db
Certificates	IECEx; ATEX; CU-TR
Conformity to standards	EN 60079-0, EN 60079-1, EN 60079-7, EN 60079-31
	IEC 60079-0, IEC 60079-1, IEC 60079-7, IEC 60079-31
Mterial	Nickel plated brass, stainless steel or galvanized carbon steel
Degree of protection	IP66
Ambient temperature	-60℃~+100℃
Type	F/F, M/F or M/M
Function	Pipe connector, reducer, connector

Zones 1&2; 21&22

Accessories for Installation
BGJ Series Explosion-proof Connectors

Selection table

Version	Female thread "H"			Dimensions (mm)							Ordering code	Weight (kg)
	Metric	NPT	G	A	B	C	D	L	L1	L2		
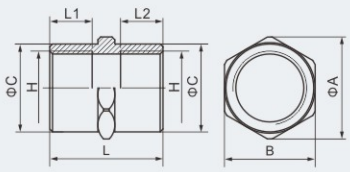 BGJ-I□□(F)/□□(F)	M20	1/2"	1/2"	30	27	25		34	15	15	703001	0.10
	M25	3/4"	3/4"	35	32	31		34	15	15	703002	0.10
	M32	1"	1"	42	38	37		44	19	19	703003	0.15
	M40	1 1/4"	1 1/4"	54	49	46		44	19	19	703004	0.25
	M50	1 1/2"	1 1/2"	60	55	54		44	19	19	703005	0.25
	M63	2"	2"	72	68	67		46	19	19	703006	0.35
	M75	2 1/2"	2 1/2"	88	83	81		46	19	19	703007	0.50
	M90	3"	3"	105	100	98		46	19	19	703008	0.65
	M110	4"	4"	130	125	123		46	19	19	703009	1.00
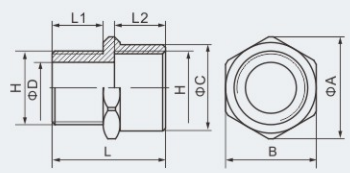 BGJ-I□□(M)/□□(F)	M20	1/2"	1/2"	30	27	25	15	36	15	17	703010	0.10
	M25	3/4"	3/4"	35	32	31	18	36	15	17	703011	0.10
	M32	1"	1"	42	38	37	25	44	19	20	703012	0.15
	M40	1 1/4"	1 1/4"	54	49	46	32	44	19	20	703013	0.20
	M50	1 1/2"	1 1/2"	60	55	54	38	44	19	20	703014	0.25
	M63	2"	2"	72	68	67	50	46	19	21	703015	0.35
	M75	2 1/2"	2 1/2"	88	83	81	65	46	19	21	703016	0.50
	M90	3"	3"	105	100	98	75	46	19	21	703017	0.65
	M110	4"	4"	130	125	123	100	46	19	21	703018	1.00
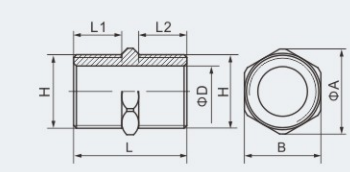 BGJ-I□□(M)/□□(M)	M20	1/2"	1/2"	30	27		15	36	15	15	703019	0.05
	M25	3/4"	3/4"	35	32		18	36	15	15	703020	0.10
	M32	1"	1"	42	38		25	46	19	19	703021	0.15
	M40	1 1/4"	1 1/4"	50	46		32	46	19	19	703022	0.25
	M50	1 1/2"	1 1/2"	60	55		38	46	19	19	703023	0.25
	M63	2"	2"	72	68		50	46	19	19	703024	0.35
	M75	2 1/2"	2 1/2"	88	83		65	46	19	19	703025	0.50
	M90	3"	3"	100	95		75	46	19	19	703026	0.65
	M110	4"	4"	127	122		100	46	19	19	703027	1.00

Note: 1. Standard material is galvanized carbon steel. Nickel plated brass or stainless steel is optional.
Above weight is based upon galvanized carbon steel.
2. Metric threads are 1.5mm pitch as standard, others thread pitch can be customized, please specify when ordering.

Accessories for Installation
BGJ Series Explosion-proof Connectors

Selection table

Version	Female thread "H1"			Female thread "H2"			Dimensions (mm)	Ordering code	Weight (kg)
	Metric	NPT	G	Metric	NPT	G	L		
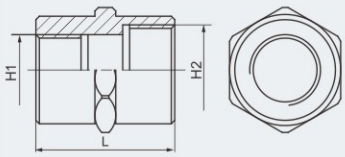 BGJ-II□□(F)/□□(F)	M20	1/2"	1/2"	M25	3/4"	3/4"	36	703028	0.10
	M25	3/4"	3/4"	M32	1"	1"	38	703029	0.15
	M32	1"	1"	M40	1 1/4"	1 1/4"	44	703030	0.25
	M40	1 1/4"	1 1/4"	M50	1 1/2"	1 1/2"	44	703031	0.30
	M50	1 1/2"	1 1/2"	M63	2"	2"	44	703032	0.35
	M63	2"	2"	M75	2 1/2"	2 1/2"	44	703033	0.50
	M75	2 1/2"	2 1/2"	M90	3"	3"	44	703034	0.65
	M90	3"	3"	M110	4"	4"	44	703035	1.00
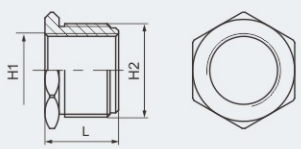 BGJ-II□□(M)/□□(F)	M20	1/2"	1/2"	M25	3/4"	3/4"	21	703036	0.05
	M25	3/4"	3/4"	M32	1"	1"	25	703037	0.10
	M32	1"	1"	M40	1 1/4"	1 1/4"	25	703038	0.25
	M40	1 1/4"	1 1/4"	M50	1 1/2"	1 1/2"	25	703039	0.45
	M50	1 1/2"	1 1/2"	M63	2"	2"	25	703040	0.60
	M63	2"	2"	M75	2 1/2"	2 1/2"	25	703041	0.75
	M75	2 1/2"	2 1/2"	M90	3"	3"	25	703042	0.90
	M90	3"	3"	M110	4"	4"	25	703043	1.20
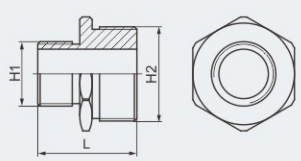 BGJ-II□□(M)/□□(M)	M20	1/2"	1/2"	M25	3/4"	3/4"	36	703044	0.10
	M25	3/4"	3/4"	M32	1"	1"	40	703045	0.15
	M32	1"	1"	M40	1 1/4"	1 1/4"	46	703046	0.25
	M40	1 1/4"	1 1/4"	M50	1 1/2"	1 1/2"	46	703047	0.25
	M50	1 1/2"	1 1/2"	M63	2"	2"	46	703048	0.35
	M63	2"	2"	M75	2 1/2"	2 1/2"	46	703049	0.50
	M75	2 1/2"	2 1/2"	M90	3"	3"	46	703050	0.65
	M90	3"	3"	M110	4"	4"	46	703051	1.00

Note: 1. Standard material is galvanized carbon steel. Nickel plated brass or stainless steel is optional.
Above weight is based upon galvanized carbon steel.
2. Metric threads are 1.5mm pitch as standard, others thread pitch can be customized, please specify when ordering.

Accessories for Installation
BGJ Series Explosion-proof Connectors

Selection table

Version	Female thread "H"			Dimensions (mm)			Ordering code	Weight (kg)
	Metric	NPT	G	A	B	L		
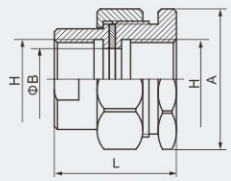 BGJ- III□□(F)/□□(F)	M20	1/2"	1/2"	37	15	40	703052	0.15
	M25	3/4"	3/4"	42	20	40	703053	0.25
	M32	1"	1"	48	25	46	703054	0.35
	M40	1 1/4"	1 1/4"	65	32	46	703055	0.50
	M50	1 1/2"	1 1/2"	70	38	46	703056	0.50
	M63	2"	2"	85	50	52	703057	0.85
	M75	2 1/2"	2 1/2"	108	65	52	703058	1.25
	M90	3"	3"	115	76	57	703059	1.70
	M110	4"	4"	145	100	57	703060	2.20
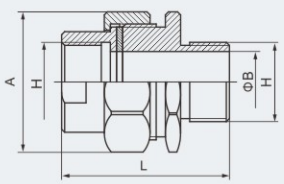 BGJ- III□□(M)/□□(F)	M20	1/2"	1/2"	37	15	55	703061	0.20
	M25	3/4"	3/4"	42	20	55	703062	0.30
	M32	1"	1"	48	25	64	703063	0.45
	M40	1 1/4"	1 1/4"	65	32	64	703064	0.60
	M50	1 1/2"	1 1/2"	70	38	64	703065	0.65
	M63	2"	2"	85	50	73	703066	1.05
	M75	2 1/2"	2 1/2"	110	102	73	703067	1.45
	M90	3"	3"	115	110	81	703068	1.55
	M110	4"	4"	145	140	81	703069	2.00
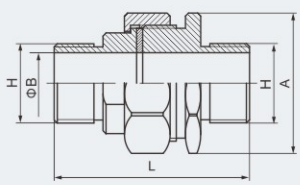 BGJ- III□□(M)/□□(M)	M20	1/2"	1/2"	37	15	64	703070	0.20
	M25	3/4"	3/4"	42	20	64	703071	0.30
	M32	1"	1"	48	25	74	703072	0.45
	M40	1 1/4"	1 1/4"	65	32	74	703073	0.70
	M50	1 1/2"	1 1/2"	70	38	74	703074	0.75
	M63	2"	2"	85	50	84	703075	1.20
	M75	2 1/2"	2 1/2"	110	102	84	703076	1.60
	M90	3"	3"	115	110	94	703077	2.05
	M110	4"	4"	145	140	94	703078	2.55

Note: 1. Standard material is galvanized carbon steel. Nickel plated brass or stainless steel is optional.
Above weight is based upon galvanized carbon steel.
2. Metric threads are 1.5mm pitch as standard, others thread pitch can be customized, please specify when ordering.

Accessories for Installation
BGJ-w Series Explosion-Proof Right Angle Connectors



- Explosion protection to
  -CENELEC
  -IEC
- Can be used in
  Zone 1 and Zone 2
  Zone 21 and Zone 22
- Available in stainless steel.

Catalogue number logic

BGJ-w □ (□) / □ (□)

- M: Male thread
- F: Female thread
- Thread
  - M: Metric thread
  - NPT: NPT thread
  - G: Pipe thread
- M: Male thread
- F: Female thread
- Thread
  - M: Metric thread
  - NPT: NPT thread
  - G: Pipe thread
- Explosion-proof right angle connectors

Technical data

Explosion-proof right angle connectors BGJ-w□(□)/□(□)

Explosion protection	
Global (IECEx)	IECEx (applied for)
Gas and dust	Ex db IIC Gb Ex eb IIC Gb Ex tb IIIC Db
Europe (ATEX)	ATEX (applied for)
Gas and dust	Ⓔx II 2 G Ex db IIC Gb Ⓔx II 2 G Ex eb IIC Gb Ⓔx II 2 D Ex tb IIIC Db
Certificates	IECEx; ATEX
Conformity to standards	EN 60079-0, EN 60079-1, EN 60079-7, EN 60079-31 IEC 60079-0, IEC 60079-1, IEC 60079-7, IEC 60079-31
Mterial	stainless steel
Degree of protection	IP66
Ambient temperature	-60℃~+100℃
Type	F/F, M/F or M/M
Function	Pipe connector, reducer, connector

Zones 1&2; 21&22

Accessories for Installation
BGJ-w Series Explosion-Proof Right Angle Connectors

Selection table

Version	Thread "H"			Dimensions (mm)					Ordering code	Weight (kg)
	Metric	NPT	G	A	B	C	L1	L2		
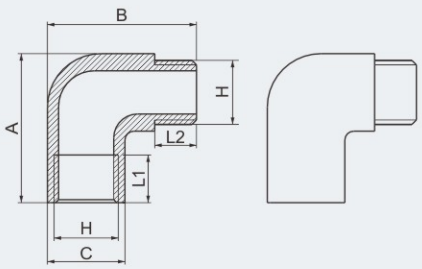 BGJ-w□(M)/□(F)	M20	1/2"	1/2"	52	50	Φ25	17	15	723001	0.10
	M25	3/4"	3/4"	58	56	Φ31	17	15	723002	0.14
	M32	1"	1"	67	66	Φ37	20	19	723003	0.17
	M40	1 1/4"	1 1/4"	76	75	Φ46	20	19	723004	0.25
	M50	1 1/2"	1 1/2"	84	83	Φ54	20	19	723005	0.30
	M63	2"	2"	98	97	Φ67	21	20	723006	0.35
	M75	2 1/2"	2 1/2"	115	120	Φ81	24	29	723007	0.70
	M90	3"	3"	134	139	Φ98	26	31	723008	1.30
	M110	4"	4"	161	167	Φ123	28	34	723009	1.90
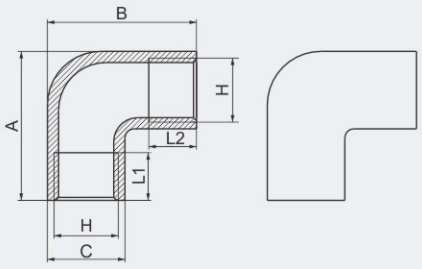 BGJ-w□(F)/□(F)	M20	1/2"	1/2"	48	48	Φ25	15	15	723010	0.10
	M25	3/4"	3/4"	54	54	Φ31	15	15	723011	0.15
	M32	1"	1"	64	64	Φ37	19	19	723012	0.20
	M40	1 1/4"	1 1/4"	73	73	Φ46	19	19	723013	0.25
	M50	1 1/2"	1 1/2"	81	81	Φ54	19	19	723014	0.30
	M63	2"	2"	94	94	Φ67	19	19	723015	0.35
	M75	2 1/2"	2 1/2"	113	113	Φ81	24	24	723016	0.70
	M90	3"	3"	132	132	Φ98	26	26	723017	1.30
	M110	4"	4"	159	159	Φ123	28	28	723018	2.00
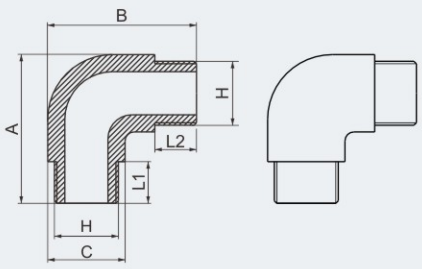 BGJ-w□(M)/□(M)	M20	1/2"	1/2"	50	50	Φ25	15	15	723019	0.07
	M25	3/4"	3/4"	56	56	Φ31	15	15	723020	0.10
	M32	1"	1"	66	66	Φ37	19	19	723021	0.15
	M40	1 1/4"	1 1/4"	75	75	Φ46	19	19	723022	0.25
	M50	1 1/2"	1 1/2"	83	83	Φ54	19	19	723023	0.25
	M63	2"	2"	97	97	Φ67	20	20	723024	0.30
	M75	2 1/2"	2 1/2"	120	120	Φ81	29	29	723025	0.60
	M90	3"	3"	139	139	Φ98	31	31	723026	1.30
	M110	4"	4"	167	167	Φ123	34	34	723027	1.70

Note: 1. Standard material is galvanized carbon steel. Nickel plated brass or stainless steel is optional.
Above weight is based upon galvanized carbon steel.
2. Metric threads are 1.5mm pitch as standard, others thread pitch can be customized, please specify when ordering.

Accessories for Installation
BAG Series Explosion-proof Seal Bushings



- Explosion protection to
  -CENELEC
  -IEC
  -NEC
- Can be used in
  Zone 1 and Zone 2
  Zone 21 and Zone 22
  Class I, Zone 1 and Zone 2
  Class I, Division 1, Groups A , B, C, D
- Copper-free Aluminium Alloy, powder coated surface.
  (cast steel or stainless steel is optional)
- Widely used for isolating seal between pipes or pipes and explosion-proof enclosures.

Catalogue number logic

BAG - □ □ □

- □ Size
- □ Thread
  - M: Metric thread
  - NPT: NPT thread
  - G: Pipe thread
- □ Type
  - Z: Vertical type
  - H: Horizontal type
  - P: Drainage type
- BAG Explosion-proof seal bushings

Technical data

Explosion-proof seal bushings	BAG-□□□
Explosion protection	
Global (IECEx)	IECEx CQM 13.0029X
Gas and dust	Ex db IIC Gb Ex eb IIC Gb Ex tb IIIC Db
Europe (ATEX)	EPT 14 ATEX 1124X
Gas and dust	Ⓔx II 2 G Ex db IIC Gb Ⓔx II 2 G Ex eb IIC Gb Ⓔx II 2 D Ex tb IIIC Db
Certificates	IECEx; ATEX; CU-TR
Conformity to standards	EN 60079-0, EN 60079-1, EN 60079-7, EN 60079-31 IEC 60079-0, IEC 60079-1, IEC 60079-7, IEC 60079-31
Enclosure material	Copper-free Aluminium Alloy, powder coated surface. (cast steel or stainless steel is optional) Note: Other material can be customized on request.
Enclosure colour	Window grey (RAL 7040)
Degree of protection	IP66
Ambient temperature	-60℃~+75℃
Type	Type Z, Type H, Type P
Connection thread	1. Metric thread is standard type; G thread or NPT thread is optional. (The seal bushings are supplied without filling compound. Please sepcify when ordering) 2. Metric threads are 1.5mm pitch as standard, others thread pitch can be customized, please specify when ordering.

Zones 1&2; 21&22

Accessories for Installation
BAG Series Explosion-proof Seal Bushings

Selection table

Version	Female thread "H"			Dimensions (mm)		Cable outer diameter (mm)	Ordering code	Weight (kg)
	Metric	NPT	G	A	B			
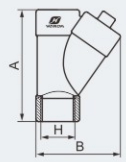 Type Z	M20	1/2"	1/2"	77	54	8~10	704001	0.10
	M25	3/4"	3/4"	87	65	10~14	704002	0.15
	M32	1"	1"	102	78	12~17	704003	0.20
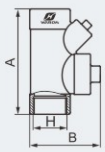 Type Z	M40	1 1/4"	1 1/4"	130	87	15~23	704004	0.35
	M50	1 1/2"	1 1/2"	130	92	17~26	704005	0.35
	M63	2"	2"	140	107	25~35	704006	0.50
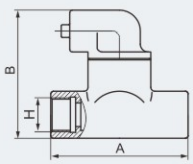 Type H	M20	1/2"	1/2"	74	95	8~10	704007	0.30
	M25	3/4"	3/4"	74	101	10~14	704008	0.30
	M32	1"	1"	74	107	12~17	704009	0.30
	M40	1 1/4"	1 1/4"	98	115	15~23	704010	0.35
	M50	1 1/2"	1 1/2"	98	134	17~26	704011	0.45
	M63	2"	2"	120	142	25~35	704012	0.55
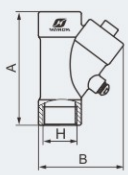 Type P	M20	1/2"	1/2"	88	61	8~10	704013	0.15
	M25	3/4"	3/4"	100	74	10~14	704014	0.20
	M32	1"	1"	111	83	12~17	704015	0.25
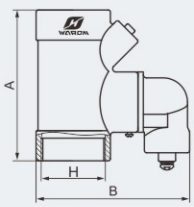 Type P	M40	1 1/4"	1 1/4"	130	116	15~23	704016	0.45
	M50	1 1/2"	1 1/2"	130	121	17~26	704017	0.45
	M63	2"	2"	140	143	25~35	704018	0.65

Schematic diagram

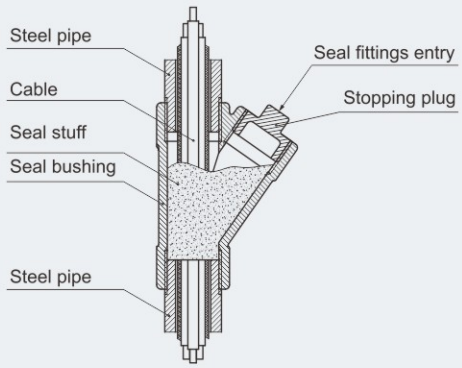

BAG-Z(Vertical type M20 x 1.5～M32 x 1.5)

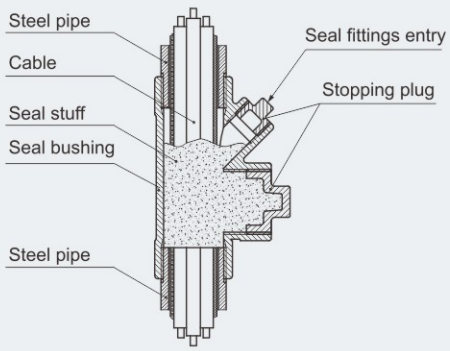

BAG-Z(Vertical type M40 x 1.5～M63 x 1.5)

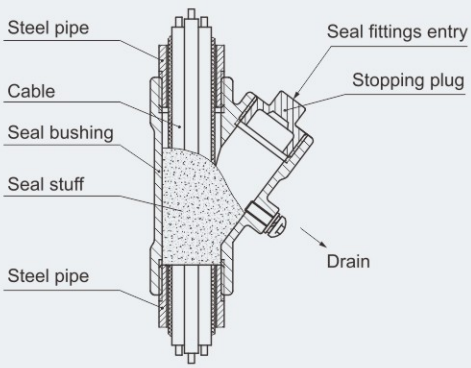

BAG-P(Drainage type M20 x 1.5～M32 x 1.5)

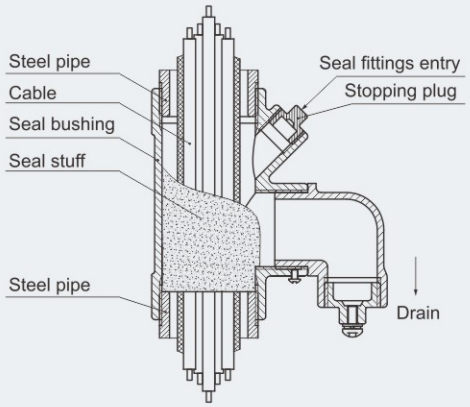

BAG-P(Drainage type M40 x 1.5～M63 x 1.5)

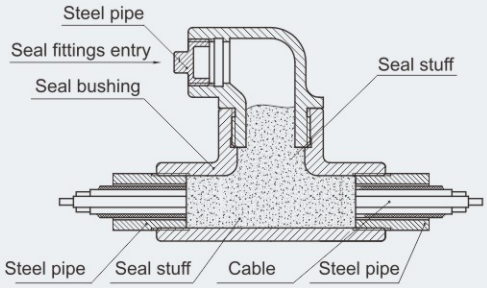

BAG-H(Horizontal type)

Cable Glands

- Explosion protection to
  - -CENELEC
  - -IEC
  - -NEC
- Can be used in
  - Zone 1 and Zone 2
  - Zone 21 and Zone 22
  - Class I, Zone 1 and Zone 2
  - Class I, Division 1, Groups A , B, C, D
  - Class I, Division 2, Groups A , B, C, D
- Ex d and Ex e versions
- Cable glands：
  - -Suitable for armored or unarmored cable
  - -Suitable for cable or steel pipe wiring



Explosion-proof cable glands include:

1) DQM-I (Ex e)
   - -Plastic, unarmored
   - -Metal, unarmored or armored
2) DQM-II (Ex d Ex e)
   - -Metal, unarmored, single seal
   - -Metal, armored, dual seal
3) DQM-III (Ex db Ex eb)
   - -Metal, unarmored, compound barrier
   - -Metal, armored, compound barrier
4) DQM-CF (Ex d Ex e)
   - -Metal, unarmored, single seal
   - -Metal, armored, dual seal

Zones 1&2; 21&22

Cable Glands
DQM-I Series Explosion-proof Cable Glands (Ex e)
Plastic Unarmored



- Explosion protection to
  - -CENELEC
  - -IEC
  - -NEC
- Can be used in
  - Zone 1 and Zone 2
  - Class I, Zone 1 and Zone 2
  - Class I, Division 2, Groups A , B, C, D
- Ex e structure, made of plastic, black.
- Single seal, suitable for unarmored cable.

Technical data

Explosion-proof cable glands DQM-I (plastic unarmored)

Explosion protection	
Global (IECEx)	IECEx CQM 07.0009
Gas	Ex e II
Europe (ATEX)	PTB 04 ATEX 1087X
Gas	Ⓔx II 2 G Ex e IIC Gb
Certificates	IECEx; ATEX; CU-TR
Conformity to standards	EN 60079-0, EN 60079-7; IEC 60079-0, IEC 60079-7
Gland material	Plastic, black
Degree of protection	IP65
Ambient temperature	-20℃~+55℃
Connection thread	Metric thread is standard type; G thread is optional, but limited at G3/4"; NPT thread is not suitable

Selection table

Gland size	Entry thread "A"	Cable outer diameter B (mm)		Minimum thread length C (mm)	Nominal protrusion length D (mm)	Across flats E (mm)	Across corners F (mm)	Ordering code	Weight (kg)
		Min	Max						
16	M16 x 1.5	5	8	15	27	19	21	705001	0.05
20	M20 x 1.5	6	10	15	29	24	26	705002	0.05
25	M25 x 1.5	9	12	15	33	30	33	705003	0.05
		12	16						
3/4	G 3/4"	9	12	15	33	30	33	705004	0.05
		12	16						
32	M32 x 1.5	10	18	15	35	41	45	705005	0.05
40	M40 x 1.5	17	25	14	46	50	55	705006	0.10
50	M50 x 1.5	23	32	14	51	57	63	705007	0.11
63	M63 x 1.5	32	44	15	51	70	78	705008	0.15

Note: 1. Supplied with locknut (nickel plated brass) and seal gasket, without stopping rod.
2. Stopping rod on request. See P7/37.

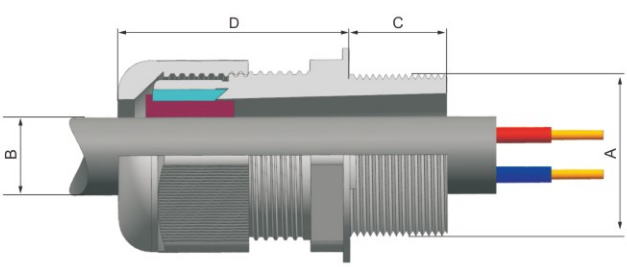

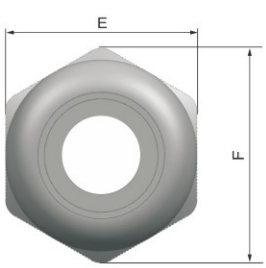

Cable Glands
DQM-I Series Explosion-proof Cable Glands (Ex eb IIC)
Metal Unarmored

- Explosion protection to
  - -CENELEC
  - -IEC
  - -NEC
- Can be used in
  - Zone 1 and Zone 2
  - Zone 21 and Zone 22
  - Class I, Zone 1 and Zone 2
  - Class I, Division 2, Groups A , B, C, D
- Ex e structure; available in stainless steel or nickel plated brass.
- Single seal, suitable for unarmored cable.



Technical data

Explosion-proof cable glands DQM-I (metal unarmored)

Explosion protection	
Global (IECEx)	IECEx EUT 17.0001X
Gas and dust	Ex eb IIC Gb Ex tb IIIC Db IP66 / IP67
Europe (ATEX)	EPT 15 ATEX 1965
Gas and dust	Ⓔx II 2 G Ex e IIC Gb Ⓔx II 2 D Ex tb IIIC Db IP66 / IP67
Certificates	IECEx; ATEX; CU-TR
Conformity to standards	EN 60079-0, EN 60079-7, EN 60079-31 IEC 60079-0, IEC 60079-7, IEC 60079-31
Gland material	Stainless steel or nickel plated brass
Degree of protection	IP66 / IP67
Ambient temperature	-60℃~+100℃
Connection thread	Metric thread is standard type; G thread or NPT thread is optional

Selection table

Gland size	Entry thread "A"			Cable outer diameter B (mm)		Minimum thread length C (mm)	Nominal protrusion length D (mm)	Across flats E (mm)	Across corners F (mm)	Ordering code	Weight (kg)
	Metric	NPT	G	Min	Max						
20	M20	1/2"	1/2"	5	10	15	33	27	30	706001	0.15
25	M25	3/4"	3/4"	9	14	15	33	32	35	706002	0.15
32	M32	1"	1"	13	18	19	37	38	41	706003	0.30
40	M40	1 1/4"	1 1/4"	17	24	19	40	47	50	706004	0.50
50	M50	1 1/2"	1 1/2"	22	32	19	40	55	60	706005	0.55
63	M63	2"	2"	31	44	19	53	68	72	706006	0.70
75	M75	2 1/2"	2 1/2"	43	56	19	53	80	85	706007	0.90

Note: 1. Standard material is nickel plated brass. Stainless steel is optional. Above weight is based upon nickel plated brass.
2. Supplied with locknut and seal gasket.
3. Earth lug and shroud on request. See P7/38~39.
4. Metric threads are 1.5mm pitch as standard, others thread pitch can be customized, please specify when ordering.

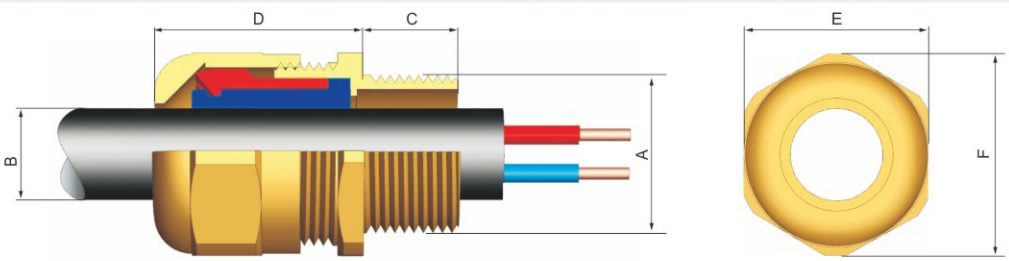

Cable Glands
DQM-I Series Explosion-proof Cable Glands (Ex eb IIC)
Metal Armored



Cable wiring



Steel pipe wiring

- Explosion protection to
  - -CENELEC
  - -IEC
  - -NEC
- Can be used in
  - Zone 1 and Zone 2
  - Zone 21 and Zone 22
  - Class I, Zone 1 and Zone 2
  - Class I, Division 2, Groups A , B, C, D
- Ex e structure; available in stainless steel or nickel plated brass.
- Single seal, suitable for both armored and unarmored cable.
- EMC Cable Gland. (360° contact) - EMC tested.

Technical data

Explosion-proof cable glands DQM-I (metal armored)

Explosion protection	
Global (IECEx)	IECEx EUT 17.0001X
Gas and dust	Ex eb IIC Gb
	Ex tb IIIC Db IP66 / IP67
Europe (ATEX)	EPT 15 ATEX 1965
Gas and dust	Ⓔx II 2 G Ex e IIC Gb
	Ⓔx II 2 D Ex tb IIIC Db IP66 / IP67
Certificates	IECEx; ATEX; CU-TR
Conformity to standards	EN 60079-0, EN 60079-7, EN 60079-31
	IEC 60079-0, IEC 60079-7, IEC 60079-31
Gland material	Stainless steel or nickel plated brass
Degree of protection	IP66 / IP67
Ambient temperature	-60℃~+100℃
Connection thread	Metric thread is standard type; G thread or NPT thread is optional

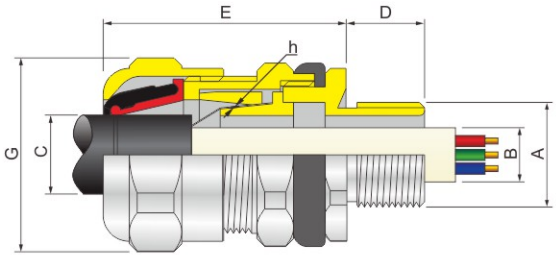

Cable wiring

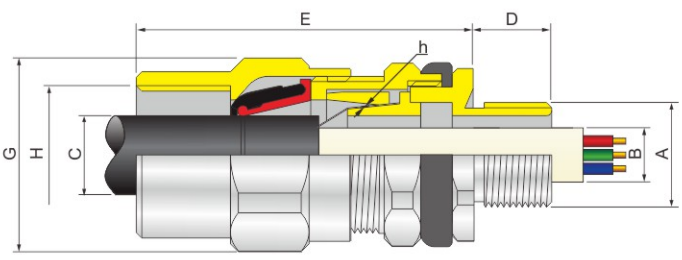

Steel pipe wiring

Selection table of cable wiring

Gland size	Entry thread "A"		Cable outer diameter B (mm)	Cable outer diameter C (mm)		Minimum thread length D (mm)	Nominal protrusion length E (mm)	Across corners G (mm)	Armour/Braid(h)		Ordering code	Weight (kg)
	Metric	NPT/G	Max	Min	Max				X	W		
20A	M20	1/2"	10.5	5.5	12.0	15	51	31	0~0.6	0.8~1.4	707001	0.11
20B	M20	1/2"	10.5	9.0	16.0	15	51	31	0~0.6	0.8~1.4	707002	0.14
20C	M20	1/2"	14.5	12.5	20.5	15	53	37	0~0.6	0.8~1.4	707003	0.14
25A	M25	3/4"	10.5	9.0	16.0	15	51	37	0~0.6	0.8~1.4	707004	0.18
25B	M25	3/4"	14.5	12.5	20.5	15	53	37	0~0.6	0.8~1.4	707005	0.17
25C	M25	3/4"	19.5	17.0	26.0	15	58	45	0~0.7	1.0~1.7	707006	0.17
32A	M32	1"	14.5	12.5	20.5	15	53	45	0~0.6	0.8~1.4	707007	0.20
32B	M32	1"	19.5	17.0	26.0	15	58	45	0~0.7	1.0~1.7	707008	0.26
32C	M32	1"	25.5	22.0	33.0	15	62	54	0~0.8	1.0~1.7	707009	0.28
40A	M40	1 1/4"	19.5	17.0	26.0	19	58	54	0~0.7	1.0~1.7	707010	0.28
40B	M40	1 1/4"	25.5	22.0	33.0	19	62	54	0~0.8	1.0~1.7	707011	0.31
40C	M40	1 1/4"	31.0	28.0	41.0	19	69	65	0~1.0	1.0~2.0	707012	0.37
50A	M50	1 1/2"	25.5	22.0	33.0	19	62	65	0~0.8	1.0~1.7	707013	0.37
50B	M50	1 1/2"	31.0	28.0	41.0	19	69	65	0~1.0	1.0~2.0	707014	0.55
50C	M50	1 1/2"	37.0	36.0	52.5	19	77	77	0~1.0	1.0~2.0	707015	0.70
63A	M63	2"	31.0	28.0	41.0	19	69	77	0~1.0	1.0~2.0	707016	0.85
63B	M63	2"	37.0	36.0	52.5	19	77	77	0~1.0	1.0~2.0	707017	1.00
63C	M63	2"	49.0	46.0	65.0	19	95	93	0~1.2	1.5~2.7	707018	1.30
75A	M75	2 1/2"	37.0	36.0	52.5	19	77	90	0~1.0	1.0~2.0	707019	2.40
75B	M75	2 1/2"	55.0	46.0	65.0	19	95	93	0~1.2	1.5~2.7	707020	2.70
75C	M75	2 1/2"	NPT: 60.0 M/G: 64.0	57.0	78.0	19	100	110	0~1.5	2.0~3.5	707021	2.80
90	M90	3"	75.0	68.0	88.0	19	100	121	0~1.5	2.0~3.5	707022	3.70
115	M115	4"	90.0	83.0	103.0	19	106	137	0~1.5	2.0~3.5	707023	4.40

Selection table of steel pipe wiring

Gland size	Entry thread "A"		Entry thread "H"		Cable outer diameter B (mm)	Cable outer diameter C (mm)		Minimum thread length D (mm)	Nominal protrusion length E (mm)	Across corners G (mm)	Armour/Braid(h)		Ordering code	Weight (kg)
	Metric	NPT/G	Metric	NPT/G	Max	Min	Max				X	W		
20A	M20	1/2"	M20	1/2"	10.5	5.5	12.0	15	66	31	0~0.6	0.8~1.4	707024	0.14
20B	M20	1/2"	M20	1/2"	10.5	9.0	16.0	15	66	31	0~0.6	0.8~1.4	707025	0.18
20C	M20	1/2"	M25	3/4"	14.5	12.5	20.5	15	68	37	0~0.6	0.8~1.4	707026	0.18
25A	M25	3/4"	M20	1/2"	10.5	9.0	16.0	15	66	37	0~0.6	0.8~1.4	707027	0.23
25B	M25	3/4"	M25	3/4"	14.5	12.5	20.5	15	68	37	0~0.6	0.8~1.4	707028	0.25
25C	M25	3/4"	M32	1"	19.5	17.0	26.0	15	77	45	0~0.7	1.0~1.7	707029	0.25
32A	M32	1"	M25	3/4"	14.5	12.5	20.5	15	68	45	0~0.6	0.8~1.4	707030	0.25
32B	M32	1"	M32	1"	19.5	17.0	26.0	15	77	45	0~0.7	1.0~1.7	707031	0.30
32C	M32	1"	M40	1 1/4"	25.5	22.0	33.0	15	81	54	0~0.8	1.0~1.7	707032	0.32
40A	M40	1 1/4"	M32	1"	19.5	17.0	26.0	19	77	54	0~0.7	1.0~1.7	707033	0.32
40B	M40	1 1/4"	M40	1 1/4"	25.5	22.0	33.0	19	81	54	0~0.8	1.0~1.7	707034	0.32
40C	M40	1 1/4"	M50	1 1/2"	31.0	28.0	41.0	19	88	65	0~1.0	1.0~2.0	707035	0.42
50A	M50	1 1/2"	M40	1 1/4"	25.5	22.0	33.0	19	81	65	0~0.8	1.0~1.7	707036	0.42
50B	M50	1 1/2"	M50	1 1/2"	31.0	28.0	41.0	19	88	65	0~1.0	1.0~2.0	707037	0.65
50C	M50	1 1/2"	M63	2"	37.0	36.0	52.5	19	96	77	0~1.0	1.0~2.0	707038	0.80
63A	M63	2"	M50	1 1/2"	31.0	28.0	41.0	19	88	77	0~1.0	1.0~2.0	707039	0.98
63B	M63	2"	M63	2"	37.0	36.0	52.5	19	96	77	0~1.0	1.0~2.0	707040	0.35
63C	M63	2"	M75	2 1/2"	49.0	46.0	65.0	19	114	93	0~1.2	1.5~2.7	707041	1.65
75A	M75	2 1/2"	M63	2"	37.0	36.0	52.5	19	96	90	0~1.0	1.0~2.0	707042	2.70
75B	M75	2 1/2"	M75	2 1/2"	55.0	46.0	65.0	19	114	93	0~1.2	1.5~2.7	707043	3.00
75C	M75	2 1/2"	M90	3"	NPT: 60.0 M/G: 64.0	57.0	78.0	19	119	110	0~1.5	2.0~3.5	707044	3.40
90	M90	3"	M115	4"	75.0	68.0	88.0	19	119	121	0~1.5	2.0~3.5	707045	4.00
115	M115	4"	M125	4 1/2"	90.0	83.0	103.0	19	125	137	0~1.5	2.0~3.5	707046	4.80

Note: 1. Standard material is nickel plated brass. Stainless steel is optional. Above weight is based upon nickel plated brass.
2. Supplied with locknut and seal gasket.
3. Earth lug and shroud on request. See P7/38~39.
4. Metric threads are 1.5mm pitch as standard, others thread pitch can be customized, please specify when ordering.

Cable Glands
DQM-II Series Explosion-proof Cable Glands (Ex d IIC Ex e IIC)
Unarmored Single Seal



Cable wiring



Steel pipe wiring

- Explosion protection to
  - -CENELEC
  - -IEC
  - -NEC
- Can be used in
  - Zone 1 and Zone 2
  - Zone 21 and Zone 22
  - Class I, Zone 1 and Zone 2
  - Class I, Division 1, Groups A , B, C, D
- Ex d, Ex e structure; available in stainless steel or nickel plated brass.
- Single seal, suitable for unarmored cable.

Technical data

Explosion-proof cable glands	DQM-II (unarmored single seal)
Explosion protection	
Global (IECEx)	IECEx LCI 08.0011X
Gas and dust	Ex d IIC Gb
	Ex e IIC Gb
	Ex tb IIIC Db IP66
Europe (ATEX)	LCIE 06 ATEX 6100X
Gas and dust	Ⓔx II 2 G Ex d IIC Gb
	Ⓔx II 2 G Ex e IIC Gb
	Ⓔx II 2 D Ex tb IIIC Db IP66
Certificates	IECEx; ATEX; CU-TR
Conformity to standards	EN 60079-0, EN 60079-1, EN 60079-7, EN 60079-31
	IEC 60079-0, IEC 60079-1, IEC 60079-7, IEC 60079-31
Gland material	Stainless steel or nickel plated brass
Degree of protection	IP66
Ambient temperature	-60℃~+100℃
Connection thread	Metric thread is standard type; G thread or NPT thread is optional

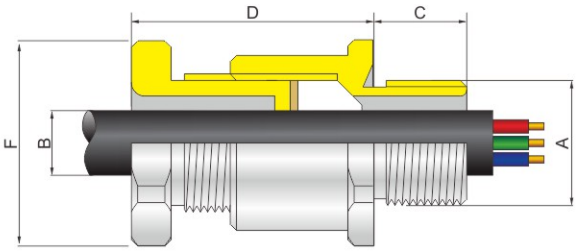

Cable wiring

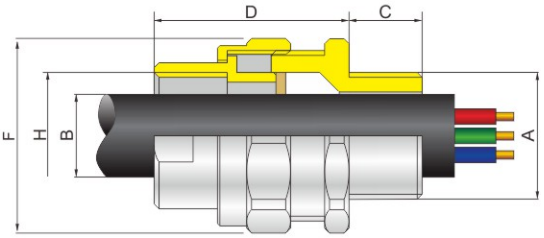

Steel pipe wiring

Selection table of cable wiring

Gland size	Entry thread "A"		Cable outer diameter B (mm)				Minimum thread length C (mm)	Nominal protrusion length D (mm)	Across corners F (mm)	Ordering code	Weight (kg)
			Standard Seal		Alternative Seal						
	Metric	NPT/G	Min	Max	Min	Max					
20A	M20A	1/2"A	6.5	10.5	4	8	15	33	31	708001	0.15
20B	M20B	1/2"B	10	14.5	8	12	15	38	31	708002	0.15
25	M25	3/4"	14.5	19.5	11	15.5	15	42	37	708003	0.20
32	M32	1"	19	25.5	17	21.5	15	44	45	708004	0.30
40	M40	1 1/4"	25	32	22	28	19	47	54	708005	0.45
50	M50	1 1/2"	31.5	39	27.5	35	19	49	65	708006	0.70
63	M63	2"	40	50	35	42	19	61	77	708007	0.90
75	M75	2 1/2"	54.5	NPT: 60.0 M/G: 64.0	48.5	58	19	66	93	708008	2.30
90	M90	3"	63	75	-	-	19	69	110	708009	2.50
115	M115	4"	75	90	-	-	19	75	137	708010	4.60

Selection table of steel pipe wiring

Gland size	Entry thread "A"		Entry thread "H"		Cable outer diameter B (mm)		Minimum thread length C (mm)	Nominal protrusion length D (mm)	Across corners F (mm)	Ordering code	Weight (kg)
	Metric	NPT/G	Metric	NPT/G	Min	Max					
20A	M20A	1/2"A	M20	1/2"	8	12	15	40	34	708011	0.20
20B	M20B	1/2"B	M20	1/2"	10	14.5	15	40	34	708012	0.20
25A	M25A	3/4"A	M25	3/4"	11	15.5	15	40	42	708013	0.25
25B	M25B	3/4"B	M25	3/4"	14.5	19.5	15	40	42	708014	0.25
32A	M32A	1"A	M32	1"	17	21.5	15	45	48	708015	0.40
32B	M32B	1"B	M32	1"	19	25.5	15	45	48	708016	0.40
40	M40	1 1/4"	M40	1 1/4"	20	30	19	58	65	708017	0.60
50	M50	1 1/2"	M50	1 1/2"	26	37	19	58	75	708018	0.75
63	M63	2"	M63	2"	30	47	19	65	87	708019	1.15
75	M75	2 1/2"	M75	2 1/2"	38	57	19	65	110	708020	1.50
90	M90	3"	M90	3"	55	67	19	65	115	708021	1.80
115	M115	4"	M115	4"	48	80	19	69	145	708022	3.50

Note: 1. Standard material is nickel plated brass. Stainless steel is optional. Above weight is based upon nickel plated brass.
2. Earth lug and shroud on request. See P7/38~39.
3. Metric threads are 1.5mm pitch as standard, others thread pitch can be customized, please specify when ordering.

Cable Glands
DQM-II Series Explosion-proof Cable Glands (Ex d IIC Ex e IIC)
Armored Dual Seal



Cable wiring



Steel pipe wiring

- Explosion protection to
  - -CENELEC
  - -IEC
  - -NEC
- Can be used in
  - Zone 1 and Zone 2
  - Zone 21 and Zone 22
  - Class I, Zone 1 and Zone 2
  - Class I, Division 1, Groups A , B, C, D
- Ex d, Ex e structure; available in stainless steel or nickel plated brass.
- Dual seal, suitable for both armored and unarmored cable.
- EMC Cable Gland. (360° contact) - EMC tested.
- Deluge seal is optional.

Technical data

Explosion-proof cable glands	DQM-II (armored dual seal)
Explosion protection	
Global (IECEx)	IECEx LCI 08.0011X
Gas and dust	Ex d IIC Gb
	Ex e IIC Gb
	Ex tb IIIC Db IP66
Europe (ATEX)	LCIE 06 ATEX 6100X
Gas and dust	Ⓔx II 2 G Ex d IIC Gb
	Ⓔx II 2 G Ex e IIC Gb
	Ⓔx II 2 D Ex tb IIIC Db IP66
Certificates	IECEx; ATEX; CU-TR
Conformity to standards	EN 60079-0, EN 60079-1, EN 60079-7, EN 60079-31
	IEC 60079-0, IEC 60079-1, IEC 60079-7, IEC 60079-31
Gland material	Stainless steel or nickel plated brass
Degree of protection	IP66
Ambient temperature	-60℃~+100℃
Connection thread	Metric thread is standard type; G thread or NPT thread is optional.

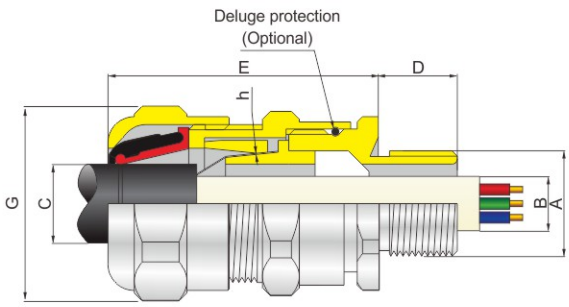

Cable wiring

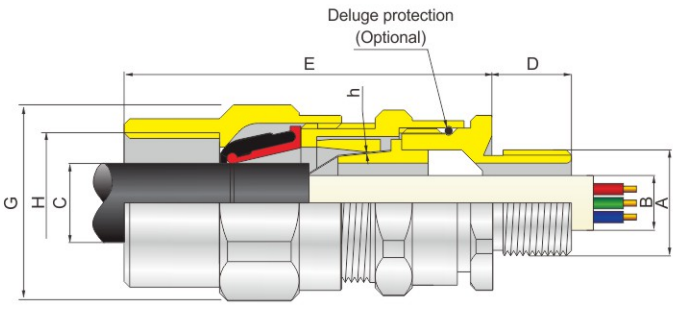

Steel pipe wiring

Selection table of cable wiring

Gland size	Entry thread "A"		Cable outer diameter B (mm)				Cable outer diameter C (mm)		Minimum thread length D (mm)	Nominal protrusion length E (mm)	Across corners G (mm)	Armour/Braid(h)		Ordering code	Weight (kg)
			Standard Seal		Alternative Seal										
	Metric	NPT/G	Min	Max	Min	Max	Min	Max				X	W		
20A	M20	1/2"	4.0	8.0	-	-	5.5	12.0	15	59	31	0~0.6	0.8~1.4	709001	0.12
20B	M20	1/2"	6.5	10.5	-	-	9.0	16.0	15	59	31	0~0.6	0.8~1.4	709002	0.15
20C	M20	1/2"	10.0	14.5	8.0	12.0	12.5	20.5	15	61	37	0~0.6	0.8~1.4	709003	0.15
25A	M25	3/4"	6.5	10.5	-	-	9.0	16.0	15	59	37	0~0.6	0.8~1.4	709004	0.15
25B	M25	3/4"	10.0	14.5	8.0	12.0	12.5	20.5	15	61	37	0~0.6	0.8~1.4	709005	0.19
25C	M25	3/4"	14.5	19.5	11.0	15.5	17.0	26.0	15	68	45	0~0.7	1.0~1.7	709006	0.18
32A	M32	1"	10.0	14.5	8.0	12.0	12.5	20.5	15	61	45	0~0.6	0.8~1.4	709007	0.18
32B	M32	1"	14.5	19.5	11.0	15.5	17.0	26.0	15	68	45	0~0.7	1.0~1.7	709008	0.22
32C	M32	1"	19.0	25.5	17.0	21.5	22.0	33.0	15	76	54	0~0.8	1.0~1.7	709009	0.30
40A	M40	1 1/4"	14.5	19.5	11.0	15.5	17.0	26.0	19	68	54	0~0.7	1.0~1.7	709010	0.30
40B	M40	1 1/4"	19.0	25.5	17.0	21.5	22.0	33.0	19	76	54	0~0.8	1.0~1.7	709011	0.40
40C	M40	1 1/4"	25.0	32.0	22.0	28.0	28.0	41.0	19	83	65	0~1.0	1.0~2.0	709012	0.40
50A	M50	1 1/2"	19.0	25.5	17.0	21.5	22.0	33.0	19	76	65	0~0.8	1.0~1.7	709013	0.40
50B	M50	1 1/2"	25.0	32.0	22.0	28.0	28.0	41.0	19	83	65	0~1.0	1.0~2.0	709014	0.60
50C	M50	1 1/2"	31.5	39.0	27.5	35.0	36.0	52.5	19	91	77	0~1.0	1.0~2.0	709015	0.80
63A	M63	2"	25.0	32.0	22.0	28.0	28.0	41.0	19	83	77	0~1.0	1.0~2.0	709016	0.90
63B	M63	2"	31.5	39.0	27.5	35.0	36.0	52.5	19	94	77	0~1.0	1.0~2.0	709017	1.00
63C	M63	2"	42.5	50.0	39.0	46.5	46.0	65.0	19	112	93	0~1.2	1.5~2.7	709018	1.20
75A	M75	2 1/2"	31.5	39.0	27.5	35.0	36.0	52.5	19	91	90	0~1.0	1.0~2.0	709019	2.50
75B	M75	2 1/2"	42.5	55.5	39.0	46.5	46.0	65.0	19	112	93	0~1.2	1.5~2.7	709020	2.80
75C	M75	2 1/2"	54.5	NPT: 60.0 M/G: 64.0	48.5	58.0	57.0	78.0	19	119	110	0~1.5	2.0~3.5	709021	2.90
90	M90	3"	63.0	75.0	-	-	68.0	88.0	19	121	121	0~1.5	2.0~3.5	709022	3.90
115	M115	4"	75.0	90.0	-	-	83.0	103.0	19	126	137	0~1.5	2.0~3.5	709023	4.55

Selection table of steel pipe wiring

Gland size	Entry thread "A"		Entry thread "H"		Cable outer diameter B (mm)				Cable outer diameter C (mm)		Minimum thread length D (mm)	Nominal protrusion length E (mm)	Across corners G (mm)	Armour/Braid(h)		Ordering code	Weight (kg)
					Standard Seal		Alternative Seal										
	Metric	NPT/G	Metric	NPT/G	Min	Max	Min	Max	Min	Max				X	W		
20A	M20	1/2"	M20	1/2"	4.0	8.0	-	-	5.5	12.0	15	74	31	0~0.6	0.8~1.4	709024	0.15
20B	M20	1/2"	M20	1/2"	6.5	10.5	-	-	9.0	16.0	15	74	31	0~0.6	0.8~1.4	709025	0.20
20C	M20	1/2"	M25	3/4"	10.0	14.5	8.0	12.0	12.5	20.5	15	96	37	0~0.6	0.8~1.4	709026	0.20
25A	M25	3/4"	M20	1/2"	6.5	10.5	-	-	9.0	16.0	15	74	37	0~0.6	0.8~1.4	709027	0.20
25B	M25	3/4"	M25	3/4"	10.0	14.5	8.0	12.0	12.5	20.5	15	76	37	0~0.6	0.8~1.4	709028	0.24
25C	M25	3/4"	M32	1"	14.5	19.5	11.0	15.5	17.0	26.0	15	83	45	0~0.7	1.0~1.7	709029	0.27
32A	M32	1"	M25	3/4"	10.0	14.5	8.0	12.0	12.5	20.5	15	76	45	0~0.6	0.8~1.4	709030	0.28
32B	M32	1"	M32	1"	14.5	19.5	11.0	15.5	17.0	26.0	15	87	45	0~0.7	1.0~1.7	709031	0.27
32C	M32	1"	M40	1 1/4"	19.0	25.5	17.0	21.5	22.0	33.0	15	95	54	0~0.8	1.0~1.7	709032	0.33
40A	M40	1 1/4"	M32	1"	14.5	19.5	11.0	15.5	17.0	26.0	19	87	54	0~0.7	1.0~1.7	709033	0.33
40B	M40	1 1/4"	M40	1 1/4"	19.0	25.5	17.0	21.5	22.0	33.0	19	95	54	0~0.8	1.0~1.7	709034	0.36
40C	M40	1 1/4"	M50	1 1/2"	25.0	32.0	22.0	28.0	28.0	41.0	19	102	65	0~1.0	1.0~2.0	709035	0.45
50A	M50	1 1/2"	M40	1 1/4"	19.0	25.5	17.0	21.5	22.0	33.0	19	95	65	0~0.8	1.0~1.7	709036	0.45
50B	M50	1 1/2"	M50	1 1/2"	25.0	32.0	22.0	28.0	28.0	41.0	19	102	65	0~1.0	1.0~2.0	709037	0.70
50C	M50	1 1/2"	M63	2"	31.5	39.0	27.5	35.0	36.0	52.5	19	110	77	0~1.0	1.0~2.0	709038	0.85
63A	M63	2"	M50	1 1/2"	25.0	32.0	22.0	28.0	28.0	41.0	19	102	77	0~1.0	1.0~2.0	709039	1.20
63B	M63	2"	M63	2"	31.5	39.0	27.5	35.0	36.0	52.5	19	110	77	0~1.0	1.0~2.0	709040	1.50
63C	M63	2"	M75	2 1/2"	42.5	50.0	39.0	46.5	46.0	65.0	19	131	93	0~1.2	1.5~2.7	709041	1.80
75A	M75	2 1/2"	M63	2"	31.5	39.0	27.5	35.0	36.0	52.5	19	110	90	0~1.0	1.0~2.0	709042	2.80
75B	M75	2 1/2"	M75	2 1/2"	42.5	55.5	39.0	46.5	46.0	65.0	19	131	93	0~1.2	1.5~2.7	709043	3.10
75C	M75	2 1/2"	M90	3"	54.5	NPT: 60.0 M/G: 64.0	48.5	58.0	57.0	78.0	19	138	110	0~1.5	2.0~3.5	709044	3.50
90	M90	3"	M115	4"	63.0	75.0	-	-	68.0	88.0	19	140	121	0~1.5	2.0~3.5	709045	4.10
115	M115	4"	M125	4 1/2"	75.0	90.0	-	-	83.0	103.0	19	145	137	0~1.5	2.0~3.5	709046	4.90

Note: 1. Standard material is nickel plated brass. Stainless steel is optional. Above weight is based upon nickel plated brass.
2. Earth lug and shroud on request. See P7/38~39.
3. Metric threads are 1.5mm pitch as standard, others thread pitch can be customized, please specify when ordering.

Cable Glands
DQM-II Series Explosion-proof Cable Glands (Ex d IIC Ex e IIC)
Armored Dual Seal



Cable wiring



Steel pipe wiring

- Explosion protection to
  - -CENELEC
  - -IEC
  - -NEC
- Can be used in
  - Zone 1 and Zone 2
  - Zone 21 and Zone 22
  - Class I, Zone 1 and Zone 2
  - Class I, Division 1, Groups A , B, C, D
- Ex d, Ex e structure; available in stainless steel or nickel plated brass.
- Dual seal, suitable for both armored and unarmored cable.
- EMC Cable Gland. (360° contact) - EMC tested.
- Deluge seal is optional.
- Provides a seal and an electrical bond on the cables lead inner sheath.

Technical data

Explosion-proof cable glands	DQM-II (armored dual seal)
Explosion protection	
Global (IECEx)	IECEx LCI 08.0011X
Gas and dust	Ex d IIC Gb
	Ex e IIC Gb
	Ex tb IIIC Db IP66
Europe (ATEX)	LCIE 06 ATEX 6100X
Gas and dust	Ⓔx II 2 G Ex d IIC Gb
	Ⓔx II 2 G Ex e IIC Gb
	Ⓔx II 2 D Ex tb IIIC Db IP66
Certificates	IECEx; ATEX; CU-TR
Conformity to standards	EN 60079-0, EN 60079-1, EN 60079-7, EN 60079-31
	IEC 60079-0, IEC 60079-1, IEC 60079-7, IEC 60079-31
Gland material	Stainless steel or nickel plated brass
Degree of protection	IP66
Ambient temperature	-60℃~+100℃
Connection thread	Metric thread is standard type; G thread or NPT thread is optional.

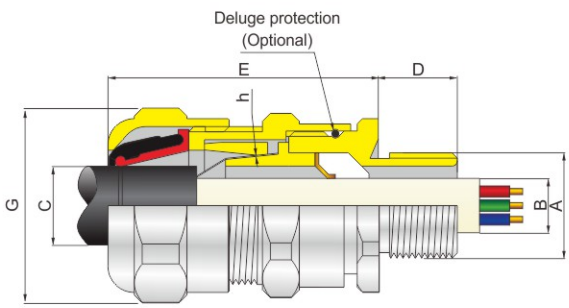

Cable wiring

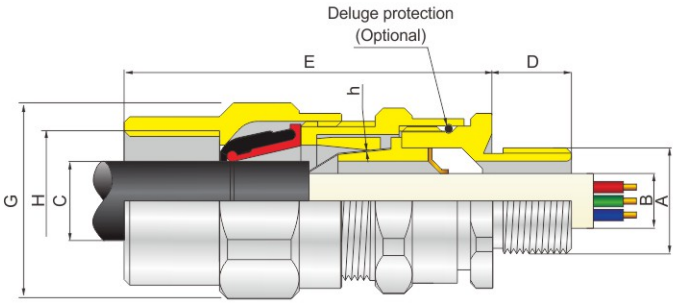

Steel pipe wiring

Selection table of cable wiring

Gland size	Entry thread "A"		Cable outer diameter B (mm)				Cable outer diameter C (mm)		Minimum thread length D (mm)	Nominal protrusion length E (mm)	Across corners G (mm)	Armour/Braid(h)		Ordering code	Weight (kg)
			Standard Seal		Alternative Seal										
	Metric	NPT/G	Min	Max	Min	Max	Min	Max				X	W		
20A	M20	1/2"	4.0	8.0	-	-	5.5	12.0	15	59	31	0~0.6	0.8~1.4	709101	0.12
20B	M20	1/2"	6.5	10.5	-	-	9.0	16.0	15	59	31	0~0.6	0.8~1.4	709102	0.15
20C	M20	1/2"	10.0	14.5	8.0	12.0	12.5	20.5	15	61	37	0~0.6	0.8~1.4	709103	0.15
25A	M25	3/4"	6.5	10.5	-	-	9.0	16.0	15	59	37	0~0.6	0.8~1.4	709104	0.15
25B	M25	3/4"	10.0	14.5	8.0	12.0	12.5	20.5	15	61	37	0~0.6	0.8~1.4	709105	0.19
25C	M25	3/4"	14.5	19.5	11.0	15.5	17.0	26.0	15	68	45	0~0.7	1.0~1.7	709106	0.18
32A	M32	1"	10.0	14.5	8.0	12.0	12.5	20.5	15	61	45	0~0.6	0.8~1.4	709107	0.18
32B	M32	1"	14.5	19.5	11.0	15.5	17.0	26.0	15	68	45	0~0.7	1.0~1.7	709108	0.22
32C	M32	1"	19.0	25.5	17.0	21.5	22.0	33.0	15	76	54	0~0.8	1.0~1.7	709109	0.30
40A	M40	1 1/4"	14.5	19.5	11.0	15.5	17.0	26.0	19	68	54	0~0.7	1.0~1.7	709110	0.30
40B	M40	1 1/4"	19.0	25.5	17.0	21.5	22.0	33.0	19	76	54	0~0.8	1.0~1.7	709111	0.40
40C	M40	1 1/4"	25.0	32.0	22.0	28.0	28.0	41.0	19	83	65	0~1.0	1.0~2.0	709112	0.40
50A	M50	1 1/2"	19.0	25.5	17.0	21.5	22.0	33.0	19	76	65	0~0.8	1.0~1.7	709113	0.40
50B	M50	1 1/2"	25.0	32.0	22.0	28.0	28.0	41.0	19	83	65	0~1.0	1.0~2.0	709114	0.60
50C	M50	1 1/2"	31.5	39.0	27.5	35.0	36.0	52.5	19	91	77	0~1.0	1.0~2.0	709115	0.80
63A	M63	2"	25.0	32.0	22.0	28.0	28.0	41.0	19	83	77	0~1.0	1.0~2.0	709116	0.90
63B	M63	2"	31.5	39.0	27.5	35.0	36.0	52.5	19	94	77	0~1.0	1.0~2.0	709117	1.00
63C	M63	2"	42.5	50.0	39.0	46.5	46.0	65.0	19	112	93	0~1.2	1.5~2.7	709118	1.20
75A	M75	2 1/2"	31.5	39.0	27.5	35.0	36.0	52.5	19	91	90	0~1.0	1.0~2.0	709119	2.50
75B	M75	2 1/2"	42.5	55.5	39.0	46.5	46.0	65.0	19	112	93	0~1.2	1.5~2.7	709120	2.80
75C	M75	2 1/2"	54.5	NPT: 60.0 M/G: 64.0	48.5	58.0	57.0	78.0	19	119	110	0~1.5	2.0~3.5	709121	2.90
90	M90	3"	63.0	75.0	-	-	68.0	88.0	19	121	121	0~1.5	2.0~3.5	709122	3.90
115	M115	4"	75.0	90.0	-	-	83.0	103.0	19	126	137	0~1.5	2.0~3.5	709123	4.55

Selection table of steel pipe wiring

Gland size	Entry thread "A"		Entry thread "H"		Cable outer diameter B (mm)				Cable outer diameter C (mm)		Minimum thread length D (mm)	Nominal protrusion length E (mm)	Across corners G (mm)	Armour/Braid(h)		Ordering code	Weight (kg)
					Standard Seal		Alternative Seal										
	Metric	NPT/G	Metric	NPT/G	Min	Max	Min	Max	Min	Max				X	W		
20A	M20	1/2"	M20	1/2"	4.0	8.0	-	-	5.5	12.0	15	74	31	0~0.6	0.8~1.4	709124	0.15
20B	M20	1/2"	M20	1/2"	6.5	10.5	-	-	9.0	16.0	15	74	31	0~0.6	0.8~1.4	709125	0.20
20C	M20	1/2"	M25	3/4"	10.0	14.5	8.0	12.0	12.5	20.5	15	96	37	0~0.6	0.8~1.4	709126	0.20
25A	M25	3/4"	M20	1/2"	6.5	10.5	-	-	9.0	16.0	15	74	37	0~0.6	0.8~1.4	709127	0.20
25B	M25	3/4"	M25	3/4"	10.0	14.5	8.0	12.0	12.5	20.5	15	76	37	0~0.6	0.8~1.4	709128	0.24
25C	M25	3/4"	M32	1"	14.5	19.5	11.0	15.5	17.0	26.0	15	83	45	0~0.7	1.0~1.7	709129	0.27
32A	M32	1"	M25	3/4"	10.0	14.5	8.0	12.0	12.5	20.5	15	76	45	0~0.6	0.8~1.4	709130	0.28
32B	M32	1"	M32	1"	14.5	19.5	11.0	15.5	17.0	26.0	15	87	45	0~0.7	1.0~1.7	709131	0.27
32C	M32	1"	M40	1 1/4"	19.0	25.5	17.0	21.5	22.0	33.0	15	95	54	0~0.8	1.0~1.7	709132	0.33
40A	M40	1 1/4"	M32	1"	14.5	19.5	11.0	15.5	17.0	26.0	19	87	54	0~0.7	1.0~1.7	709133	0.33
40B	M40	1 1/4"	M40	1 1/4"	19.0	25.5	17.0	21.5	22.0	33.0	19	95	54	0~0.8	1.0~1.7	709134	0.36
40C	M40	1 1/4"	M50	1 1/2"	25.0	32.0	22.0	28.0	28.0	41.0	19	102	65	0~1.0	1.0~2.0	709135	0.45
50A	M50	1 1/2"	M40	1 1/4"	19.0	25.5	17.0	21.5	22.0	33.0	19	95	65	0~0.8	1.0~1.7	709136	0.45
50B	M50	1 1/2"	M50	1 1/2"	25.0	32.0	22.0	28.0	28.0	41.0	19	102	65	0~1.0	1.0~2.0	709137	0.70
50C	M50	1 1/2"	M63	2"	31.5	39.0	27.5	35.0	36.0	52.5	19	110	77	0~1.0	1.0~2.0	709138	0.85
63A	M63	2"	M50	1 1/2"	25.0	32.0	22.0	28.0	28.0	41.0	19	102	77	0~1.0	1.0~2.0	709139	1.20
63B	M63	2"	M63	2"	31.5	39.0	27.5	35.0	36.0	52.5	19	110	77	0~1.0	1.0~2.0	709140	1.50
63C	M63	2"	M75	2 1/2"	42.5	50.0	39.0	46.5	46.0	65.0	19	131	93	0~1.2	1.5~2.7	709141	1.80
75A	M75	2 1/2"	M63	2"	31.5	39.0	27.5	35.0	36.0	52.5	19	110	90	0~1.0	1.0~2.0	709142	2.80
75B	M75	2 1/2"	M75	2 1/2"	42.5	55.5	39.0	46.5	46.0	65.0	19	131	93	0~1.2	1.5~2.7	709143	3.10
75C	M75	2 1/2"	M90	3"	54.5	NPT: 60.0 M/G: 64.0	48.5	58.0	57.0	78.0	19	138	110	0~1.5	2.0~3.5	709144	3.50
90	M90	3"	M115	4"	63.0	75.0	-	-	68.0	88.0	19	140	121	0~1.5	2.0~3.5	709145	4.10
115	M115	4"	M125	4 1/2"	75.0	90.0	-	-	83.0	103.0	19	145	137	0~1.5	2.0~3.5	709146	4.90

Note: 1. Standard material is nickel plated brass. Stainless steel is optional. Above weight is based upon nickel plated brass.
2. Earth lug and shroud on request. See P7/38~39.
3. Metric threads are 1.5mm pitch as standard, others thread pitch can be customized, please specify when ordering.

Cable Glands
DQM-III/I Series Explosion-proof Cable Glands (Ex db IIC, Ex eb IIC)
Unarmored Compound Barrier



Cable wiring



Steel pipe wiring

- Explosion protection to
  -CENELEC
  -IEC
  -NEC
- Can be used in
  Zone 1 and Zone 2
  Zone 20, Zone 21 and Zone 22
  Class I, Zone 1 and Zone 2
  Class I, Division 1, Groups A , B, C, D
- Ex db, Ex eb structure; available in stainless steel or nickel plated brass.
- With sealring and sealing compound; suitable for unarmored cable.
- For particular use with: cables that exhibit “cold flow” characteristics.

Technical data

Explosion-proof cable glands	DQM-III/I (unarmored compound barrier)
Explosion protection	
Global (IECEx)	IECEx TUR 22.0035X
Gas and dust	Ex db IIC Gb (M and NPT thread) Ex eb IIC Gb (M, NPT and G thread) Ex ta IIIC Da (M and NPT thread)
Europe (ATEX)	TÜV 22 ATEX 8855X
Gas and dust	Ⓔx II 2 G Ex db IIC Gb (M and NPT thread) Ⓔx II 2 G Ex eb IIC Gb (M, NPT and G thread) Ⓔx II 2 D Ex ta IIIC Da (M and NPT thread)
Certificates	IECEx; ATEX; CU-TR
Conformity to standards	EN 60079-0, EN 60079-1, EN 60079-7, EN 60079-31 IEC 60079-0, IEC 60079-1, IEC 60079-7, IEC 60079-31
Gland material	Stainless steel or nickel plated brass
Degree of protection	IP66/IP68 (unarmored cable gland M25×1.5 to M63×1.5 and NPT 1/2" to NPT 2") IP66 (the other threads)
Ambient temperature	-60℃~+90℃
Connection thread	Metric thread is standard type; G thread or NPT thread is optional

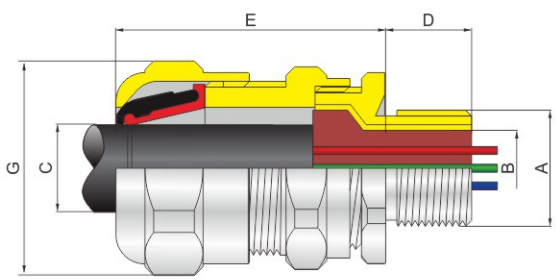

Cable wiring

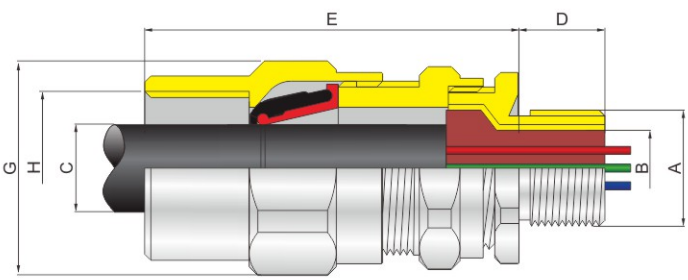

Steel pipe wiring

Selection table of cable wiring

Gland size	Entry thread "A"		Cable outer diameter B (mm)	Cable outer diameter C (mm)		Minimum thread length D (mm)	Nominal protrusion length E (mm)	Across corners G (mm)	Ordering code	Weight (kg)
	Metric	NPT/G	Max	Min	Max					
20A	M20A	1/2"A	10	5.5	12	15	51	31	710001	0.10
20B	M20B	1/2"B	13	9.0	16	15	51	31	710002	0.10
25A	M25A	3/4"A	13	9.0	16	15	51	37	710003	0.12
25B	M25B	3/4"B	18	12.5	20.5	15	53	37	710004	0.15
32A	M32A	1"A	18	12.5	20.5	15	53	45	710005	0.17
32B	M32B	1"B	24	17	26	15	58	45	710006	0.20
40A	M40A	1 1/4"A	24	17	26	19	58	54	710007	0.22
40B	M40B	1 1/4"B	30	22	33	19	62	54	710008	0.27
50A	M50A	1 1/2"A	30	22	33	19	62	65	710009	0.40
50B	M50B	1 1/2"B	37	28	41	19	69	65	710010	0.50
63A	M63A	2"A	37	28	41	19	69	77	710011	0.80
63B	M63B	2"B	47	36	52.5	19	77	77	710012	0.90
75A	M75A	2 1/2"A	47	36	52.5	19	77	90	710013	2.30
75B	M75B	2 1/2"B	55	46	65	19	95	110	710014	2.70
90	M90	3"	60	57	78	19	100	121	710015	2.80
115	M115	4"	70	68	88	19	106	137	710016	3.60

Selection table of steel pipe wiring

Gland size	Entry thread "A"		Entry thread "H"		Cable outer diameter B (mm)	Cable outer diameter C (mm)		Minimum thread length D (mm)	Nominal protrusion length E (mm)	Across corners G (mm)	Ordering code	Weight (kg)
	Metric	NPT/G	Metric	NPT/G	Max	Min	Max					
20A	M20A	1/2"A	M20	1/2"	10	5.5	12	15	66	31	710017	0.12
20B	M20B	1/2"B	M20	1/2"	13	9.0	16	15	66	31	710018	0.12
25A	M25A	3/4"A	M20	1/2"	13	9.0	16	15	66	37	710019	0.15
25B	M25B	3/4"B	M25	3/4"	18	12.5	20.5	15	68	37	710020	0.18
32A	M32A	1"A	M25	3/4"	18	12.5	20.5	15	68	45	710021	0.21
32B	M32B	1"B	M32	1"	24	17	26	15	77	45	710022	0.24
40A	M40A	1 1/4"A	M32	1"	24	17	26	19	77	54	710023	0.29
40B	M40B	1 1/4"B	M40	1 1/4"	30	22	33	19	81	54	710024	0.35
50A	M50A	1 1/2"A	M40	1 1/4"	30	22	33	19	81	65	710025	0.50
50B	M50B	1 1/2"B	M50	1 1/2"	37	28	41	19	88	65	710026	0.64
63A	M63A	2"A	M50	1 1/2"	37	28	41	19	88	77	710027	0.98
63B	M63B	2"B	M63	2"	47	36	52.5	19	96	77	710028	1.17
75A	M75A	2 1/2"A	M63	2"	47	36	52.5	19	96	90	710029	2.60
75B	M75B	2 1/2"B	M75	2 1/2"	55	46	65	19	114	110	710030	3.00
90	M90	3"	M90	3"	60	57	78	19	119	121	710031	3.30
115	M115	4"	M115	4"	70	68	88	19	125	137	710032	4.00

Note: 1. Standard material is nickel plated brass. Stainless steel is optional. Above weight is based upon nickel plated brass.
2. Earth lug and shroud on request. See P7/38~39.
3. Metric threads are 1.5mm pitch as standard, others thread pitch can be customized, please specify when ordering.

Cable Glands
DQM-III/II Series Explosion-proof Cable Glands (Ex db IIC, Ex eb IIC)
Armored Compound Barrier



Cable wiring



Steel pipe wiring

- Explosion protection to
  -CENELEC
  -IEC
  -NEC
- Can be used in
  Zone 1 and Zone 2
  Zone 20, Zone 21 and Zone 22
  Class I, Zone 1 and Zone 2
  Class I, Division 1, Groups A , B, C, D
- Ex db, Ex eb structure; available in stainless steel or nickel plated brass.
- With sealing ring and sealing compound; suitable for armored cable.
- For particular use with: cables that exhibit “cold flow” characteristics.
- EMC Cable Gland. (360° contact) - EMC tested.

Technical data

Explosion-proof cable glands	DQM-III/II (armored compound barrier)
Explosion protection	
Global (IECEx)	IECEx TUR 22.0035X
Gas and dust	Ex db IIC Gb (M and NPT thread) Ex eb IIC Gb (M, NPT and G thread) Ex ta IIIC Da (M and NPT thread)
Europe (ATEX)	TÜV 22 ATEX 8855X
Gas and dust	Ⓔx II 2 G Ex db IIC Gb (M and NPT thread) Ⓔx II 2 G Ex eb IIC Gb (M, NPT and G thread) Ⓔx II 2 D Ex ta IIIC Da (M and NPT thread)
Certificates	IECEx; ATEX; CU-TR
Conformity to standards	EN 60079-0, EN 60079-1, EN 60079-7, EN 60079-31 IEC 60079-0, IEC 60079-1, IEC 60079-7, IEC 60079-31
Gland material	Stainless steel or nickel plated brass
Degree of protection	IP66
Ambient temperature	-60℃~+90℃
Connection thread	Metric thread is standard type; G thread or NPT thread is optional

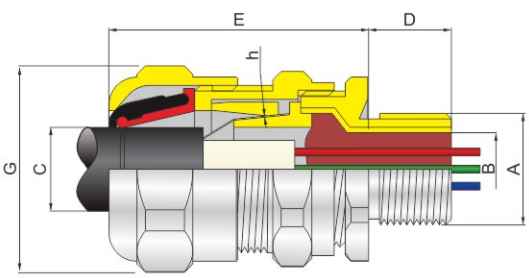

Cable wiring

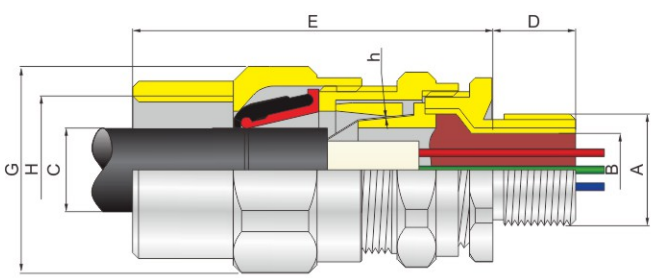

Steel pipe wiring

Selection table of cable wiring

Gland size	Entry thread "A"		Cable outer diameter B (mm)	Cable outer diameter C (mm)		Minimum thread length D (mm)	Nominal protrusion length E (mm)	Across corners G (mm)	Armour/Braid(h)		Ordering code	Weight (kg)
	Metric	NPT/G	Max	Min	Max				X	W		
20A	M20	1/2"	10.0	5.5	12.0	15	51	31	0~0.6	0.8~1.4	711001	0.12
20B	M20	1/2"	10.0	9.0	16.0	15	51	31	0~0.6	0.8~1.4	711002	0.15
20C	M20	1/2"	13.0	12.5	20.5	15	53	37	0~0.6	0.8~1.4	711003	0.15
25A	M25	3/4"	10.0	9.0	16.0	15	51	37	0~0.6	0.8~1.4	711004	0.19
25B	M25	3/4"	13.0	12.5	20.5	15	53	37	0~0.6	0.8~1.4	711005	0.18
25C	M25	3/4"	18.0	17.0	26.0	15	58	45	0~0.7	1.0~1.7	711006	0.18
32A	M32	1"	13.0	12.5	20.5	15	53	45	0~0.6	0.8~1.4	711007	0.21
32B	M32	1"	18.0	17.0	26.0	15	58	45	0~0.7	1.0~1.7	711008	0.27
32C	M32	1"	24.0	22.0	33.0	15	62	54	0~0.8	1.0~1.7	711009	0.29
40A	M40	1 1/4"	18.0	17.0	26.0	19	58	54	0~0.7	1.0~1.7	711010	0.29
40B	M40	1 1/4"	24.0	22.0	33.0	19	62	54	0~0.8	1.0~1.7	711011	0.32
40C	M40	1 1/4"	30.0	28.0	41.0	19	69	65	0~1.0	1.0~2.0	711012	0.38
50A	M50	1 1/2"	24.0	22.0	33.0	19	62	65	0~0.8	1.0~1.7	711013	0.38
50B	M50	1 1/2"	30.0	28.0	41.0	19	69	65	0~1.0	1.0~2.0	711014	0.57
50C	M50	1 1/2"	37.0	36.0	52.5	19	77	77	0~1.0	1.0~2.0	711015	0.75
63A	M63	2"	30.0	28.0	41.0	19	69	77	0~1.0	1.0~2.0	711016	0.90
63B	M63	2"	37.0	36.0	52.5	19	77	77	0~1.0	1.0~2.0	711017	1.10
63C	M63	2"	47.0	46.0	65.0	19	95	93	0~1.2	1.5~2.7	711018	1.40
75A	M75	2 1/2"	37.0	36.0	52.5	19	77	90	0~1.0	1.0~2.0	711019	2.50
75B	M75	2 1/2"	55.0	46.0	65.0	19	95	93	0~1.2	1.5~2.7	711020	2.90
75C	M75	2 1/2"	60.0	57.0	78.0	19	100	110	0~1.5	2.0~3.5	711021	3.00
90	M90	3"	70.0	68.0	88.0	19	100	121	0~1.5	2.0~3.5	711022	3.90
115	M115	4"	90.0	83.0	103.0	19	106	137	0~1.5	2.0~3.5	711023	4.60

Selection table of steel pipe wiring

Gland size	Entry thread "A"		Entry thread "H"		Cable outer diameter B (mm)	Cable outer diameter C (mm)		Minimum thread length D (mm)	Nominal protrusion length E (mm)	Across corners G (mm)	Armour/Braid(h)		Ordering code	Weight (kg)
	Metric	NPT/G	Metric	NPT/G	Max	Min	Max				X	W		
20A	M20	1/2"	M20	1/2"	10.0	5.5	12.0	15	66	31	0~0.6	0.8~1.4	711024	0.14
20B	M20	1/2"	M20	1/2"	10.0	9.0	16.0	15	66	31	0~0.6	0.8~1.4	711025	0.17
20C	M20	1/2"	M25	3/4"	13.0	12.5	20.5	15	66	37	0~0.6	0.8~1.4	711026	0.17
25A	M25	3/4"	M20	1/2"	10.0	9.0	16.0	15	66	37	0~0.6	0.8~1.4	711027	0.21
25B	M25	3/4"	M25	3/4"	13.0	12.5	20.5	15	68	37	0~0.6	0.8~1.4	711028	0.20
25C	M25	3/4"	M32	1"	18.0	17.0	26.0	15	77	45	0~0.7	1.0~1.7	711029	0.20
32A	M32	1"	M25	3/4"	13.0	12.5	20.5	15	68	45	0~0.6	0.8~1.4	711030	0.23
32B	M32	1"	M32	1"	18.0	17.0	26.0	15	77	45	0~0.7	1.0~1.7	711031	0.29
32C	M32	1"	M40	1 1/4"	24.0	22.0	33.0	15	81	54	0~0.8	1.0~1.7	711032	0.31
40A	M40	1 1/4"	M32	1"	18.0	17.0	26.0	19	77	54	0~0.7	1.0~1.7	711033	0.31
40B	M40	1 1/4"	M40	1 1/4"	24.0	22.0	33.0	19	81	54	0~0.8	1.0~1.7	711034	0.35
40C	M40	1 1/4"	M50	1 1/2"	30.0	28.0	41.0	19	88	65	0~1.0	1.0~2.0	711035	0.40
50A	M50	1 1/2"	M40	1 1/4"	24.0	22.0	33.0	19	81	65	0~0.8	1.0~1.7	711036	0.40
50B	M50	1 1/2"	M50	1 1/2"	30.0	28.0	41.0	19	88	65	0~1.0	1.0~2.0	711037	0.60
50C	M50	1 1/2"	M63	2"	37.0	36.0	52.5	19	96	77	0~1.0	1.0~2.0	711038	0.80
63A	M63	2"	M50	1 1/2"	30.0	28.0	41.0	19	88	77	0~1.0	1.0~2.0	711039	1.05
63B	M63	2"	M63	2"	37.0	36.0	52.5	19	96	77	0~1.0	1.0~2.0	711040	1.25
63C	M63	2"	M75	2 1/2"	47.0	46.0	65.0	19	114	93	0~1.2	1.5~2.7	711041	1.60
75A	M75	2 1/2"	M63	2"	37.0	36.0	52.5	19	96	90	0~1.0	1.0~2.0	711042	2.70
75B	M75	2 1/2"	M75	2 1/2"	55.0	46.0	65.0	19	114	93	0~1.2	1.5~2.7	711043	3.20
75C	M75	2 1/2"	M90	3"	60.0	57.0	78.0	19	119	110	0~1.5	2.0~3.5	711044	3.40
90	M90	3"	M115	4"	70.0	68.0	88.0	19	119	121	0~1.5	2.0~3.5	711045	4.20
115	M115	4"	M125	4 1/2"	90.0	83.0	103.0	19	125	137	0~1.5	2.0~3.5	711046	4.90

Note: 1. Standard material is nickel plated brass. Stainless steel is optional. Above weight is based upon nickel plated brass.
2. Earth lug and shroud on request. See P7/38~39.
3. Metric threads are 1.5mm pitch as standard, others thread pitch can be customized, please specify when ordering.

Cable Glands
DQM-CF Series Explosion-proof Cable Glands (Ex db IIC Ex eb IIC)
Armored Dual Seal



Cable wiring



Steel pipe wiring

- Explosion protection to
  - -CENELEC
  - -IEC
  - -NEC
- Can be used in
  - Zone 1 and Zone 2
  - Zone 21 and Zone 22
  - Class I, Zone 1 and Zone 2
  - Class I, Division 1, Groups A , B, C, D
- Ex d, Ex e structure; available in stainless steel or nickel plated brass.
- Dual seal, suitable for both armored and unarmored cable.
- EMC Cable Gland. (360° contact) - EMC tested.
- For particular use with: cables that exhibit “cold flow” characteristics.

Technical data

Explosion-proof cable glands	DQM-CF (armored dual seal)
Explosion protection	
Global (IECEx)	IECEx TUR 20.0072X
Gas and dust	Ex db IIC Gb (only for M and NPT thread)
	Ex eb IIC Gb
	Ex tb IIIC Db
Europe (ATEX)	TÜV 20 ATEX 8593 X
Gas and dust	Ⓔx II 2 G Ex db IIC Gb (only for M and NPT thread)
	Ⓔx II 2 G Ex eb IIC Gb
	Ⓔx II 2 D Ex tb IIIC Db
Certificates	IECEx; ATEX; CU-TR
Conformity to standards	EN 60079-0, EN 60079-1, EN 60079-7, EN 60079-31
	IEC 60079-0, IEC 60079-1, IEC 60079-7, IEC 60079-31
Gland material	Stainless steel or nickel plated brass
Degree of protection	IP66
Ambient temperature	-60℃~+90℃
Connection thread	Metric thread is standard type; G thread or NPT thread is optional.

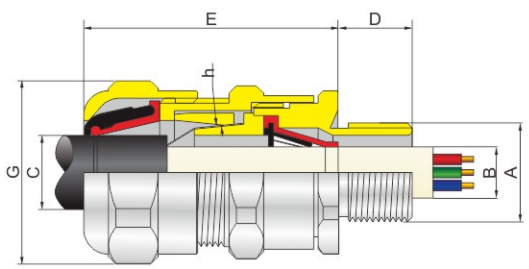

Cable wiring

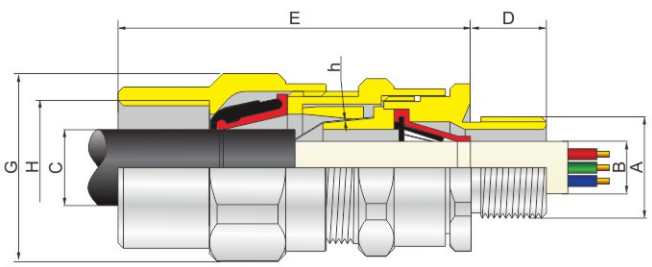

Steel pipe wiring

Selection table of cable wiring

Gland size	Entry thread "A"		Cable outer diameter B (mm)		Cable outer diameter C (mm)		Minimum thread length D (mm)	Nominal protrusion length E (mm)	Across corners G (mm)	Armour/Braid(h)		Ordering code	Weight (kg)
	Metric	NPT/G	Min	Max	Min	Max				X	W		
20A	M20	1/2"	4.0	8.0	5.5	12.0	15	59	31	0~0.6	0.8~1.4	722001	0.12
20B	M20	1/2"	6.5	10.5	9.0	16.0	15	59	31	0~0.6	0.8~1.4	722002	0.15
20C	M20	1/2"	8.5	14.5	12.5	20.5	15	61	37	0~0.6	0.8~1.4	722003	0.15
25B	M25	3/4"	8.5	14.5	12.5	20.5	15	61	37	0~0.6	0.8~1.4	722004	0.19
25C	M25	3/4"	11.0	19.5	17.0	26.0	15	65	45	0~0.7	1.0~1.7	722005	0.18
32B	M32	1"	11.0	19.5	17.0	26.0	15	65	45	0~0.7	1.0~1.7	722006	0.22
32C	M32	1"	17.0	25.5	22.0	33.0	15	70	54	0~0.8	1.0~1.7	722007	0.30
40B	M40	1 1/4"	17.0	25.5	22.0	33.0	19	70	54	0~0.8	1.0~1.7	722008	0.40
40C	M40	1 1/4"	23.0	32.0	28.0	41.0	19	78	65	0~1.0	1.0~2.0	722009	0.40
50B	M50	1 1/2"	23.0	32.0	28.0	41.0	19	78	65	0~1.0	1.0~2.0	722010	0.60
50C	M50	1 1/2"	29.0	39.0	36.0	52.5	19	90	77	0~1.0	1.0~2.0	722011	0.80
63B	M63	2"	29.0	39.0	36.0	52.5	19	90	77	0~1.0	1.0~2.0	722012	1.00
63C	M63	2"	42.0	50.0	46.0	65.0	19	115	93	0~1.2	1.5~2.7	722013	1.20
75B	M75	2 1/2"	42.0	50.0	46.0	65.0	19	115	93	0~1.2	1.5~2.7	722014	1.20
75C	M75	2 1/2"	48.0	60.0	57.0	78.0	19	125	110	0~1.5	2.0~3.5	722015	1.30

Selection table of steel pipe wiring

Gland size	Entry thread "A"		Entry thread "H"		Cable outer diameter B (mm)		Cable outer diameter C (mm)		Minimum thread length D (mm)	Nominal protrusion length E (mm)	Across corners G (mm)	Armour/Braid(h)		Ordering code	Weight (kg)
	Metric	NPT/G	Metric	NPT/G	Min	Max	Min	Max				X	W		
20A	M20	1/2"	M20	1/2"	4.0	8.0	5.5	12.0	15	74	31	0~0.6	0.8~1.4	722024	0.15
20B	M20	1/2"	M20	1/2"	6.5	10.5	9.0	16.0	15	74	31	0~0.6	0.8~1.4	722025	0.20
20C	M20	1/2"	M25	3/4"	8.5	14.5	12.5	20.5	15	76	37	0~0.6	0.8~1.4	722026	0.20
25B	M25	3/4"	M25	3/4"	8.5	14.5	12.5	20.5	15	76	37	0~0.6	0.8~1.4	722027	0.24
25C	M25	3/4"	M32	1"	11.0	19.5	17.0	26.0	15	84	45	0~0.7	1.0~1.7	722028	0.27
32B	M32	1"	M32	1"	11.0	19.5	17.0	26.0	15	84	45	0~0.7	1.0~1.7	722029	0.27
32C	M32	1"	M40	1 1/4"	17.0	25.5	22.0	33.0	15	89	54	0~0.8	1.0~1.7	722030	0.33
40B	M40	1 1/4"	M40	1 1/4"	17.0	25.5	22.0	33.0	19	89	54	0~0.8	1.0~1.7	722031	0.36
40C	M40	1 1/4"	M50	1 1/2"	23.0	32.0	28.0	41.0	19	97	65	0~1.0	1.0~2.0	722032	0.45
50B	M50	1 1/2"	M50	1 1/2"	23.0	32.0	28.0	41.0	19	97	65	0~1.0	1.0~2.0	722033	0.70
50C	M50	1 1/2"	M63	2"	29.0	39.0	36.0	52.5	19	109	77	0~1.0	1.0~2.0	722034	0.85
63B	M63	2"	M63	2"	29.0	39.0	36.0	52.5	19	109	77	0~1.0	1.0~2.0	722035	1.50
63C	M63	2"	M75	2 1/2"	42.0	50.0	46.0	65.0	19	134	93	0~1.2	1.5~2.7	722036	1.70
75B	M75	2 1/2"	M75	2 1/2"	42.0	50.0	46.0	65.0	19	134	93	0~1.2	1.5~2.7	722037	1.70
75C	M75	2 1/2"	M90	3"	48.0	60.0	57.0	78.0	19	144	110	0~1.5	2.0~3.5	722038	1.80

Note: 1. Standard material is nickel plated brass. Stainless steel is optional. Above weight is based upon nickel plated brass.
2. Earth lug and shroud on request. See P7/38~39.
3. Metric threads are 1.5mm pitch as standard, others thread pitch can be customized, please specify when ordering.

Flexible Conduits
BNG Series Stainless Steel Explosion-proof Flexible Conduits



- Explosion protection to
  - -CENELEC
  - -IEC
  - -NEC
- Can be used in
  - Zone 1 and Zone 2
  - Zone 21 and Zone 22
  - Class I, Zone 1 and Zone 2
  - Class I, Division 1, Groups A , B, C, D
- Ex d structure; stainless steel body; connectors at both ends in stainless steel.
- Application:
  - -Widely used for flexible connection between explosion-proof boxes or explosion-proof light fittings and pipes
  - -Protect cable from any damage
  - -Highly corrosion-proof

Catalogue number logic

BNG - □ x □ □ (□) / □ □ (□)

- M: Male thread
- F: Female thread
- Size
- Thread → M: Metric thread; NPT: NPT thread; G: Pipe thread
- M: Male thread
- F: Female thread
- Size
- Thread → M: Metric thread; NPT: NPT thread; G: Pipe thread
- Length
- Explosion-proof flexible conduits

Technical data

Stainless steel explosion-proof flexible conduits BNG-□x□□(□)/□□(□)

Explosion protection	
Global (IECEx)	IECEx CQM 11.0014U
Gas and dust	Ex d IIC Gb Ex tD A21 IP66
Europe (ATEX)	DNV 10 ATEX 87636U
Gas and dust	Ⓔx II 2 G Ex d IIC Gb Ⓔx II 2 D Ex tD A21 IP66
Certificates	IECEx; ATEX; CU-TR
Conformity to standards	EN 60079-0, EN 60079-1, EN 61241-0, EN 61241-1 IEC 60079-0, IEC 60079-1, IEC 61241-0, IEC 61241-1
Material	Stainless steel body; connectors at both ends in stainless steel
Degree of protection	IP66
Ambient temperature	-60℃~+55℃
Connection thread Type	Metric thread is standard type; G thread or NPT thread is optional F/F, M/F or M/M

Note: 1. M75, M90, M115 equivalent G thread and NPT thread can be customized, other length can be customized.
2. Metric threads are 1.5mm pitch as standard, others thread pitch can be customized, please specify when ordering.

Zones 1&2; 21&22

Selection table

Version	Internal nominal diameter (mm)	Pipe connector thread "H"			Length L (mm)	Minimum bending radius (mm)	Ordering code	Weight (kg)
		Metric	NPT	G				
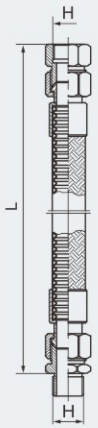 BNG-□x□□(M)/□□(F)	13	M20	1/2"	1/2"	700	80	712001	0.55
	13	M20	1/2"	1/2"	1000	80	712002	0.70
	15	M25	3/4"	3/4"	700	110	712003	0.85
	15	M25	3/4"	3/4"	1000	110	712004	1.00
	18	M32	1"	1"	700	145	712005	1.05
	18	M32	1"	1"	1000	145	712006	1.15
	25	M40	1 1/4"	1 1/4"	700	180	712007	1.25
	25	M40	1 1/4"	1 1/4"	1000	180	712008	1.30
	30	M50	1 1/2"	1 1/2"	700	210	712009	1.70
	30	M50	1 1/2"	1 1/2"	1000	210	712010	1.95
	47	M63	2"	2"	700	250	712011	2.35
	47	M63	2"	2"	1000	250	712012	2.40
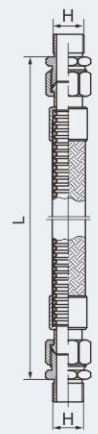 BNG-□x□□(M)/□□(M)	13	M20	1/2"	1/2"	700	80	712013	0.50
	13	M20	1/2"	1/2"	1000	80	712014	0.65
	15	M25	3/4"	3/4"	700	110	712015	0.80
	15	M25	3/4"	3/4"	1000	110	712016	0.95
	18	M32	1"	1"	700	145	712017	1.00
	18	M32	1"	1"	1000	145	712018	1.05
	25	M40	1 1/4"	1 1/4"	700	180	712019	1.15
	25	M40	1 1/4"	1 1/4"	1000	180	712020	1.20
	30	M50	1 1/2"	1 1/2"	700	210	712021	1.60
	30	M50	1 1/2"	1 1/2"	1000	210	712022	1.80
	47	M63	2"	2"	700	250	712023	2.15
	47	M63	2"	2"	1000	250	712024	2.25
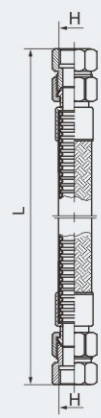 BNG-□x□□(F)/□□(F)	13	M20	1/2"	1/2"	700	80	712025	0.65
	13	M20	1/2"	1/2"	1000	80	712026	0.75
	15	M25	3/4"	3/4"	700	110	712027	0.95
	15	M25	3/4"	3/4"	1000	110	712028	1.05
	18	M32	1"	1"	700	145	712029	1.10
	18	M32	1"	1"	1000	145	712030	1.30
	25	M40	1 1/4"	1 1/4"	700	180	712031	1.35
	25	M40	1 1/4"	1 1/4"	1000	180	712032	1.40
	30	M50	1 1/2"	1 1/2"	700	210	712033	1.80
	30	M50	1 1/2"	1 1/2"	1000	210	712034	2.15
	47	M63	2"	2"	700	250	712035	2.55
	47	M63	2"	2"	1000	250	712036	3.15

Accessories



- Explosion protection to
  - -CENELEC
  - -IEC
  - -NEC
- Can be used in
  - Zone 1 and Zone 2
  - Zone 21 and Zone 22
  - Class I, Zone 1 and Zone 2
  - Class I, Division 1, Groups A , B, C, D
  - Class I, Division 2, Groups A , B, C, D

- Accessories for cable gland include stopping rod, stopping plug, shroud, earth lug, etc., meeting requirements of connection between enclosure and cable gland.
- For example, the DQM-I Ex e stopping is used for DQM-I Ex e cable gland to plug up Ex e enclosure.
- Ex e stopping plug in plastic is used to plug up cable entries on Ex e enclosure.
- Ex d stopping plug in aluminium alloy and metal is used to plug up cable entries on Ex d enclosure.
- The shroud protects cable gland against damage.
- The earth lug between cable gland and enclosure is used for earth connection.

Zones 1&2; 21&22

Selection table of DQM-I Ex e stopping rod

Version	Specification	Dimensions (mm)			Ordering code	Weight (kg)
		L	D	d		
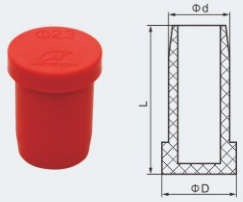 DQM-I Ex e stopping rod	Φ8 (for M16 x 1.5, M20 x 1.5)	24	10	7.5	713001	0.05
	Φ12 (for M25 x 1.5, M32 x 1.5)	28	13	11.5	713002	0.05
	Φ23 (for M40 x 1.5)	34	27	23	713003	0.05
	Φ32 (for M50 x 1.5, M63 x 1.5)	34	35	32	713004	0.05

Material: Plastic

Ambient temperature: -40℃~+55℃

Function: Suitable for DQM-I Ex e unarmored cable gland (see P7/18).

Selection table of locknut

Version	Entry thread "H"		Dimensions (mm)			Ordering code	Weight (kg)
	Metric	G	A	B	L		
 Locknut 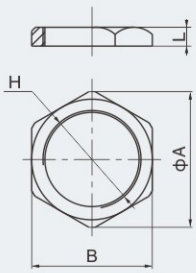	M16	-	22	19	3.5	714001	0.003
	M20	1/2"	27	24	3	714002	0.005
	M25	3/4"	35	32	4	714003	0.012
	M32	1"	42	38	5	714004	0.017
	M40	1 1/4"	50	46	6	714005	0.026
	M50	1 1/2"	60	55	6	714006	0.028
	M63	2"	75	70	6	714007	0.055
	M75	2 1/2"	90	85	6	714008	0.078
	M90	3"	105	100	8	714009	0.146
	M115	4"	130	125	8	714010	0.255

Material: Galvanized carbon steel, nickel plated brass or stainless steel.
Function: Secures a cable gland in position at the equipment.
Note: 1. Metric thread is standard type; G thread or NPT thread is optional. Please specify material when ordering. The above weight is based upon carbon steel.
2. Metric threads are 1.5mm pitch as standard, others thread pitch can be customized, please specify when ordering.

Selection table of serrated washer

Version	Specification	Dimensions (mm)			Ordering code	Weight (kg)
		D	d	s		
 Serrated washer 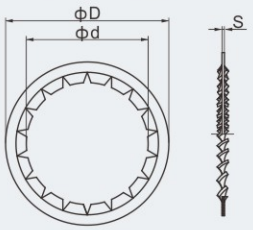	For M20 x 1.5	33	21	1.5	715001	0.005
	For M25 x 1.5	37	27.5	1.5	715002	0.006
	For M32 x 1.5	45.5	34	1.5	715003	0.008
	For M40 x 1.5	55	42.5	1.5	715004	0.010
	For M50 x 1.5	64.5	50.5	1.5	715005	0.014
	For M63 x 1.5	78	63.5	1.5	715006	0.024
	For M75 x 1.5	92.5	75.5	1.5	715007	0.033

Material: Stainless steel
Function: For use on cable gland entry threads.

Selection table of sealing washer

Version	Specification	Dimensions (mm)			Ordering code	Weight (kg)
		D	d	t		
 Sealing washer 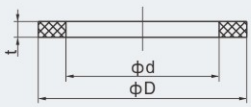	For M20 x 1.5	28	20	2	716001	0.0010
	For M25 x 1.5	35	25	2	716002	0.0018
	For M32 x 1.5	40	32	2	716003	0.0019
	For M40 x 1.5	50	40	2	716004	0.0025
	For M50 x 1.5	60	50	2	716005	0.0031
	For M63 x 1.5	74	63	2	716006	0.0045
	For M75 x 1.5	90	75	2	716007	0.0051
	For M90 x 1.5	108	90	2	716008	0.0130
	For M115 x 1.5	130	115	2	716009	0.0122

Material: Teflon (PTFE)
Function: For use on cable gland entry threads.

Selection table of shroud

Version	Size Code	Dimensions (mm)			For						Ordering code	Weight (kg)
					DQM-I		DQM-II		DQM-III			
		B	L	L1	Metal Unarmored	Metal Armored	Unarmored Single Seal	Armored Dual seal	Unarmored Compound Barrier	Armored Compound Barrier		
 Shroud 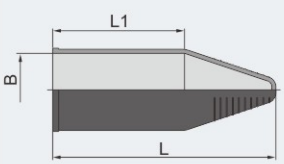	A	30	116	60	M20	M20A M20B M25A	M20A M20B	M20A M20B M25A	M20A M20B M25A	M20A M20B M25A	717001	0.015
	B	36	110	65	M25	M20C M25B M32A	M25	M20C M25B M32A	M25B M32A	M20C M25B M32A	717002	0.019
	C	44	125	70	M32	M25C M32B M40A	M32	M25C M32B M40A	M32B M40A	M25C M32B M40A	717003	0.027
	D	53	140	75	M40	M32C M40B M50A	M40	M32C M40B M50A	M40B M50A	M32C M40B M50A	717004	0.073
	E	64	145	85	M50	M40C M50B M63A	M50	M40C M50B M63A	M50B M63A	M40C M50B M63A	717005	0.100
	F	76	155	95	M63	M50C M63B M75A	M63	M50C M63B M75A	M63B M75A	M50C M63B M75A	717006	0.165
	G	92	185	115	M75	M63C M75B	M75	M63C M75B	M75B	M63C M75B	717007	0.200
	H	108	200	120	-	M75C	M90	M75C	-	M75C	717008	0.250
	I	120	205	125	-	M90	-	M90	-	M90	717009	0.350

Material: Polyvinyl chloride (PVC)
Function: For fitting over cable glands when additional environmental and corrosion protection is required.

Selection table of earth lug

Version	Specification (ΦA,mm)	Rated short circuit current per second (kA)	Ordering code	Weight(kg)
 Earth lug 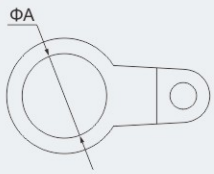	20	3.0	718001	0.05
	25	4.0	718002	0.05
	32	5.4	718003	0.05
	40	7.2	718004	0.05
	50	10.4	718005	0.10
	63	10.4	718006	0.10
	75	10.4	718007	0.15
	90	10.4	718008	0.20
	115	10.4	718009	0.30

Material: Nickel plated brass
Function: Earth connection.

Selection table of stopping plug (Ex e, plastic)

Version	Specification	Dimensions(mm)			Ordering code	Weight(kg)
		M	L1	L2		
 BPT-e Ex e stopping plug (plastic) 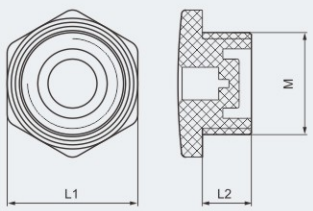	M16 x 1.5	M16 x 1.5	19	15	719001	0.003
				25	719002	
	M20 x 1.5	M20 x 1.5	24	15	719003	0.005
				25	719004	
	M25 x 1.5	M25 x 1.5	29	15	719005	0.005
				25	719006	
	M32 x 1.5	M32 x 1.5	41	15	719007	0.008
				25	719008	
	M40 x 1.5	M40 x 1.5	50	15	719009	0.011
				25	719010	
	M50 x 1.5	M50 x 1.5	57	15	719011	0.022
				25	719012	
	M63 x 1.5	M63 x 1.5	70	15	719013	0.040
				25	719014	

Explosion protection:

Global (IECEx)	IECEx CQM 16.0021X
Gas and dust	Ex e IIC Gb Ex tb IIIC Db IP66
Europe (ATEX)	EPT 16 ATEX 2502
Gas and dust	Ⓔx II 2 G Ex eb IIC Gb Ⓔx II 2 D Ex tb IIIC Db
Certificates	IECEx; ATEX
Degree of protection	IP66
Ambient temperature	-40℃~+70℃
Material	PA66 (Polyamide)
Function	To be used at spare entries of explosion-proof equipment; made of plastic; Corrosion-proof and waterproof; Metric thread is standard type. Supplied with seal gasket.

Note: Shall be used together with locknut.

Selection table of BPT stopping plug (Ex d Ex e)

Version

Explosion protection	
Global (IECEx)	IECEx LCIE 15.0070U
Gas and dust	Ex db IIC Gb Ex e IIC Gb Ex tb IIIC Db
Europe (ATEX)	LCIE 09 ATEX 3040U
Gas and dust	Ⓔx II 2 G Ex db IIC Gb Ⓔx II 2 G Ex e IIC Gb Ⓔx II 2 D Ex tb IIIC Db
Certificates	IECEx; ATEX; CU-TR
Degree of protection	IP66
Ambient temperature	-60℃~+100℃
Material	Copper-free Aluminium Alloy, galvanized carbon steel, nickel plated brass or stainless steel.
Function	Metric thread is standard type; G thread or NPT thread is optional. To be used at spare entries of explosion-proof equipment; corrosion-proof and waterproof; supplied with seal gasket (not applicable for NPT thread).

Note: 1. Please specify material when ordering. The above weight is based upon nickel plated brass.
2. Metric threads are 1.5mm pitch as standard, others thread pitch can be customized, please specify when ordering.



BPT Ex stopping plug

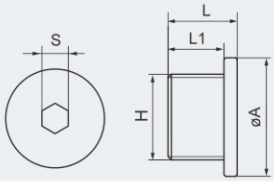

BPT stopping plug (Copper-free Aluminium Alloy)

Entry thread "H"		Dimensions(mm)				Ordering code	Weight (kg)
Metric	G	A	S	L	L1		
M20	1/2"	30	8	22	17	720001	0.05
M25	3/4"	36	8	21	17	720002	0.05
M32	1"	45	10	26	20	720003	0.05
M40	1 1/4"	54	10	26	20	720004	0.05
M50	1 1/2"	62	10	26	20	720005	0.10
M63	2"	77	10	26	20	720006	0.16

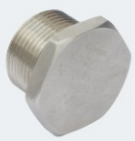

BPT Ex stopping plug (Metric/G)

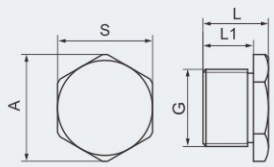

BPT stopping plug (galvanized carbon steel, nickel plated brass or stainless steel)

Entry thread "G"		Dimensions(mm)				Ordering code	Weight (kg)
Metric	G	A	S	L	L1		
M20	1/2"	30	27	22	15	720007	0.05
M25	3/4"	36	32	22	15	720008	0.07
M32	1"	42	38	26	15	720009	0.15
M40	1 1/4"	52	47	26	20	720010	0.17
M50	1 1/2"	60	55	26	20	720011	0.26
M63	2"	70	66	30	22	720012	0.47
M75	2 1/2"	88	83	30	22	720013	0.66
M90	3"	100	95	32	24	720014	0.90
M115	4"	127	122	32	24	720015	1.15



BPT Ex stopping plug (NPT)

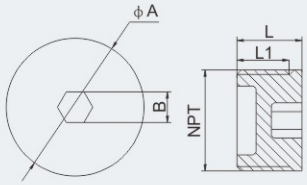

BPT stopping plug (nickel plated brass or stainless steel)

Entry thread "NPT"	Dimensions(mm)				Ordering code	Weight (kg)
NPT	A	B	L	L1		
1/2"	22	10	17	15	720016	0.05
3/4"	27	10	17	15	720017	0.07
1"	34	10	21	19	720018	0.15
1 1/4"	43	10	21	19	720019	0.17
1 1/2"	49	19	22	19	720020	0.26
2"	61	19	23	20	720021	0.47
2 1/2"	74	19	32	29	720022	0.66
3"	90	19	34	31	720023	0.90
4"	115	19	38	34	720024	1.15

Selection table of BPS(H) explosion-proof drain plug (Breather)

BPS(H)-I



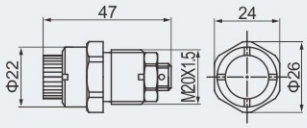

Explosion protection	
Global (IECEx)	IECEx CQM 22.0023X
Gas and dust	Ex db IIC T6/T5/96℃ (T4) Gb Ex tb IIIC T80℃/T95℃/T130℃ Db
Europe (ATEX)	TÜV CY 23 ATEX 0206872U
Gas and dust	Ⓔx II 2 G Ex db IIC T6/T5/96℃ (T4) Gb Ⓔx II 2 D Ex tb IIIC T80℃/T95℃/T130℃ Db
Certificates	IECEx; ATEX; CU-TR
Conformity to standards	EN 60079-0, EN 60079-1, EN 60079-31 IEC 60079-0, IEC 60079-1, IEC 60079-31
Material	SS316 (SS304, SS316L is optional)
Thread specification	M20×1.5
Degree of protection	IP66
Ambient temperature	T6 for Tamb: -60℃~+44℃ T5 for Tamb: -60℃~+59℃ 96℃(T4) for Tamb: -60℃~+60℃

BPS(H)-II



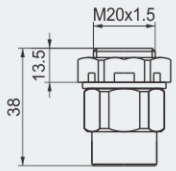

Explosion protection	
Global (IECEx)	IECEx CQM 22.0023X
Gas and dust	Ex eb IIC T6...T4 Gb Ex tb IIIC T80℃/T95℃/T130℃ Db
Europe (ATEX)	TÜV CY 23 ATEX 0206872U
Gas and dust	Ⓔx II 2 G Ex eb IIC T6...T4 Gb Ⓔx II 2 D Ex tb IIIC T80℃/T95℃/T130℃ Db
Certificates	IECEx; ATEX
Conformity to standards	EN 60079-0, EN 60079-7, EN 60079-31 IEC 60079-0, IEC 60079-7, IEC 60079-31
Material	Brass (SS304, SS316, SS316L is optional)
Thread specification	M20×1.5
Degree of protection	IP66
Ambient temperature	T6/T80℃ for Tamb: -60℃~+80℃ T5/T95℃ for Tamb: -60℃~+95℃ T4/T130℃ for Tamb: -60℃~+130℃

Description of MCCB and MCB rotary actuator with padlock

Version	Description	Ordering code	Version	Description	Ordering code
	MCCB rotary actuator, metal material, with padlock, suitable for the locking bar outer diameter of Φ6-Φ8.	721001		MCB rotary actuator, metal material, with padlock, suitable for the locking bar outer diameter of Φ3-Φ4.5.	721004
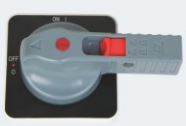	MCCB rotary actuator, plastic material, with padlock, suitable for the locking bar outer diameter of Φ5.5-Φ8.	721002		MCB rotary actuator, plastic material, with padlock, suitable for the locking bar outer diameter of Φ3-Φ6.5.	721005
	The product is provided with padlock, suitable for MCCB rotary actuator, the outer diameter of locking bar is Φ6.	721003		The product is provided with padlock, suitable for MCB rotary actuator, the outer diameter of locking bar is Φ4.	721006

Note: The coventional color of Padlock is red, other other colors can be customized, please specify when ordering.

8



Exhaust Fans,
Air Conditioners,
Distribution Cabinets,
Engineering Cabins,
Camera,
Online Monitoring Analysis System,
Helicopter Platform,
Explosion-proof Computer System

Contents

General Introduction 8/2

Exhaust Fans

BFS Series Explosion-proof Wall-mounted Exhaust Fans (Ex db IIB) 8/4

BT35 Series Explosion-proof Axial Fans (Ex db IIC) 8/6

Air Conditioners

BKF Series Explosion-proof Wall Air Conditioners (Ex nC d [ib] ib IIB) 8/10

BKF(R) Series Explosion-proof Wall Air Conditioners (Ex d e ib mb px IIC) 8/12

Pressurized Products and Engineering Cabins

PXK Series Explosion-proof Pressurized Distribution Cabinets (Ex pzc IIC) 8/14

PXK Series Explosion-proof Pressurized Distribution Cabinets (Ex db eb pxb IIC) 8/16

PXB Series Explosion-proof Engineering Cabins (Ex px IIB) 8/18

Camera

BJK-S/G Series Explosion-proof Camera (Ex db IIC) 8/20

BJK-S/GD Series Explosion-proof Camera (Ex db IIC) 8/22

BJK-YT/B Series Explosion-proof Integrated Camera (Ex db IIC) 8/24

BJK-YT/BD Series Explosion-proof Integrated Camera (Ex db IIC) 8/26

Explosion-proof Online Monitoring Analysis System

BXCQ Explosion-proof Overflow Static Grounding Control System 8/28

Helicopter Platform

Helicopter Landing Platform Aid System 8/32

Explosion-proof Computer System

HRS606 Series Explosion-proof Tablet 8/36

BPC-Z Series Explosion-proof Desktop 8/38

BPC-X Series Explosion-proof Monitor 8/40

BPC-XM Series Explosion-proof Monitor (Touch-integrated) 8/42

BPC-J Series Intrinsic Safety Keyboard 8/44

BPC-S Series Explosion-proof Mouse 8/46

BPC-A Series Safety Barrier for Explosion-proof Keyboard and Mouse 8/48

More products are under development. Please contact us or visit our website for the latest product development. We reserve the right to make alteration to the technical data, weight, dimensions, designs and products available without notice.

Air Conditioners

- Explosion protection to
  -CENELEC
  -IEC
- Can be used in
  Zone 1 and Zone 2
  Zone 21 and Zone 22
- Mounting: window type, split wall type, and split tank type.
- Ambient temperature groups of T1,T2,T3 are available to meet different climates all over the world. Ambient temperature T1 ranges from -7℃~+43℃, Ambient temperature T2 ranges from -7℃~+35℃, Ambient temperature T3 ranges from -7℃~+52℃, the explosion-proof treatment of products of T1, T2, T3 groups is based on renowned brand. User should choose the proper product according to the local ambient temperature.
- It can be widely used in explosive gas atmosphere of II A, II B, II C with temperature groups of T1, T2, T3, such as petroleum, chemical, mine, oil storage, pharmacy, gas station, liquefied gas station, military facilities, etc..
- Product of T1 group is suitable for area with medium temperature while low temperature for T2 product and high for T3 respectively. The T3 group is mostly suitable for high temperature areas, such as Middle East, Middle Africa etc..
- For explosion-proof window type air conditioner, the corresponding product is the cooling-only air conditioner in T1, T3 group. For split tank and split wall types, both cooling-only and cooling & heating products in T1, T2, and T3 are available.
- Normally, the product is of T1 temperature class, and rated voltage is 220V AC/50Hz. Other voltages are available, such as 220V AC/60Hz, 230V AC/50Hz, 230V AC/60Hz, 240V AC/50Hz, 240V AC/60Hz etc., please specify when ordering.
- The Technical Parameters of all kinds of air conditioners are of T1 temperature class.
- Cooling capacity
  Generally, cooling capacity of 1P (horse power) equals to 2000Kcal. According to international standard, cooling capacity of 1P=2000Kcal x 1.162=2324(W). W represents cooling capacity. Cooling capacity of 1.5P=2000Kcal x 1.5 x 1.162=3486(W). Therefore, it is easy to determine horse power of the air conditioner and the cooling capacity. Normally, 1P product is defined in the range of 2200(W)~2600(W); 3200(W)~3600(W) for 1.5P; 4500 (W)~5100(W) for 2P. For British unit, it should be calculated as follows: A(BTU) x 1.06÷3.6 =B (W). For instance, 18000 (BTU) x 1.06÷3.6=5300 (W), that is, 2P air conditioner. In room of 3 meters high and with out large heating unit, air conditioner of 1P, 1.5P, 2P, 3P, or 5P is suitably used in areas of 12~18, 20~25, 24~36, 30~40, 40~60(m^3). Warning: explosion-proof air-conditioning products are not suitable for spaces <12m^3, Increase the cooling capacity accordingly if the height of room exceeds 3 meters or there is frequent personnel in and out.

Pressurized Products

Distribution Cabinets

- Explosion protection to
  -CENELEC
  -IEC
- Can be used in
  Zone 1 and Zone 2
  Zone 21 and Zone 22
- Explosion groups (for gases): IIC.
- Available in types K (Cabinet type), Q (Console type), T (Special requirement).
- The explosion-proof performance is achieved by isolating the ignition source by medium, that is, to put all the electrical components in an enclosure filled with pressurized and clean medium, which makes the combustible mixed gas unable to get in touch with the spark or dangerous temperature produced by the components during normal working.
- The product consists of main cavity and auxiliary cavity. The main cavity is of pressurized cavity, with electrical components that users need and pressure check sensor system, ventilation air distribution system, and air conditioning system etc.. The auxiliary cavity is installed with explosion-proof ventilation auto-control system, explosion-proof power auto-off system, explosion-proof alarm system, explosion-proof pressure display system, and air in/out connector; the auxiliary cavity with auto-air supply is equipped with explosion-proof air supply device.
- Px series pressurized cabinet is equipped with ventilation inter-lock mechanism; the auxiliary cavity can be energized and start to detect the air pressure of main cavity only after ventilation of main cavity. And there is nocombustible gas in the main cavity after reaching the stipulated time and the ventilation value. Make sure the electrical components have been isolated effectively by medium before operation;

- The air sources which are provided by user should include the clean or inert gases. Generally, the on-site instrument air can meet requirement. Air pressure is 0.2-0.8MPa or 0.2-0.5MPa (subject to volume size of main cavity).
- The applicable power system is the AC three-phase four-wire 380/220 system and all the light current system; high voltage system is not applicable.
- Pz series pressurized cabinet is a pressurized explosion-proof cabinet designed for Zone 2; compared with Px series, Pz series leave out the safety device that checks ventilation time, and only marks the ventilation time; it is operated according to requirement before energizing of main cavity by user; when air pressure is lower than 100Pa, the auto-control system automatically alarms (audio and visual); starts air inflow and automatically adjusts inner air; when air inflow succeeds, it recovers to normal; if not, the air pressure decreases to 60Pa; the system does not automatically de-energize, but continues to alarm.
- When ordering, users should provide electric system drawing, control schematic diagram, brand of inner components, layout drawing of panel components, cable side of inlet/out, and quantity, etc. .

Engineering Cabins

- Explosion protection to
  -CENELEC
  -IEC
- Can be used in
  Zone 1 and Zone 2
  Zone 21 and Zone 22
- Enclosure in carbon steel or stainless steel.
- Two types of enclosure.
- Can be customized on request.
- The pressurized engineering cabin is integral of the combination, completion, and installation of industrial online instruments, and is firstly widely used in oil field, oil refining and chemical enterprise;
- The engineering cabinet is of steel construction; the inner and outer walls are both steel plate, with thermal insulating layer in the middle;
- The product is mainly applicable for on-site centralized control, dispatch, craft analysis and instrument monitoring;
- The system consists of main structure of room, pressurized control system, pressurized ventilation system, pressure monitoring system, detection system of combustible gas, detection system of toxic gas, high temperature alarm system, smoking alarm system, audio and visual alarm system, lighting system, air conditioner system, general power system and electrical system.

Camera

- Explosion protection to
  -CENELEC
  -IEC
- Can be used in
  Zone 1 and Zone 2
  Zone 21 and Zone 22
- Explosion groups (for gases): IIB, IIC.
- This chapter introduces the BJK series explosion-proof video surveillance system, including explosion-proof camera, explosion-proof integrated camera, etc., with functions such as real-time monitoring, video playback, intelligent control, AI analysis, and permission assignment; the product meets the user's requirement for video surveillance in explosion-proof, waterproof, dustproof and other harsh environments.
- Usage requirements.

Exhaust Fans
BFS Series Explosion-proof Wall-mounted Exhaust Fans



- Explosion protection to
  -CENELEC
  -IEC
- Can be used in
  Zone 1 and Zone 2
- Enclosure in carbon steel or stainless steel
- Comprehensive Design: Comprising an explosion-proof motor, impellers, and an integrated mounting bracket, ensuring reliable installation.
- Aesthetic and Functional: The integrated mounting bracket enhances both appearance and stability.
- Quiet Operation: Equipped with vibration-reducing components, it operates with minimal noise.
- Ideal for Specialized Applications: Perfectly suited for air exhaust and intake in environments like equipment rooms and explosion-proof cabins.

Catalogue number logic

BFS - □ / □ □

- B: With shutters (optional)
- Rated voltage
- Impeller diameter
- Explosion-proof wall exhaust fans

Selection table

Model	Rated voltage (V)	Impeller diameter (mm)	Power (kW)
BFS-300	220, 380	295~300	0.18
BFS-400	220, 380	395~400	0.25
BFS-500	220, 380	495~500	0.55
BFS-600	220, 380	595~600	0.75

Zones 1&2

Technical data

Explosion-proof wall-mounted exhaust fans BFS-□/□□

Explosion protection	
Global (IECEx)	IECEx (applied for)
Gas	Ex db IIB T4 Gb
Europe (ATEX)	ATEX (applied for)
Gas	Ⓔx II 2 G Ex db IIB T4 Gb
Certificates	IECEx; ATEX
Conformity to standards	EN 60079-0, EN 60079-1, IEC 60079-0, IEC 60079-1
Rated voltage	220V, 380V
Spindle speed	1450r/min
Inlet thread	G3/4"
Cable outer diameter	Φ10mm~Φ14mm

Dimension drawings (all dimensions in mm) - subject to alteration

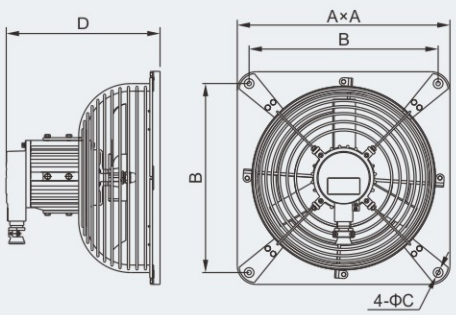

BFS-300/BFS-400

Model	A(mm)	B(mm)	D(mm)	ΦC(mm)
BFS-300	385	340	280	8.5
BFS-400	485	390	290	8.5

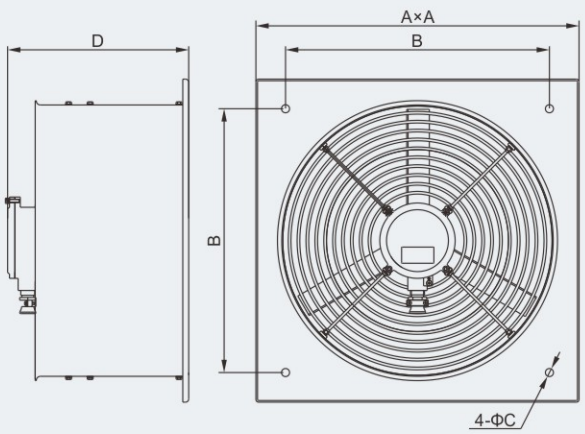

BFS-500/BFS-600

Model	A(mm)	B(mm)	D(mm)	ΦC(mm)
BFS-500	600	500	310	8.5
BFS-600	700	590	310	8.5

Exhaust Fans
BT35 Series Explosion-proof Axial Fans

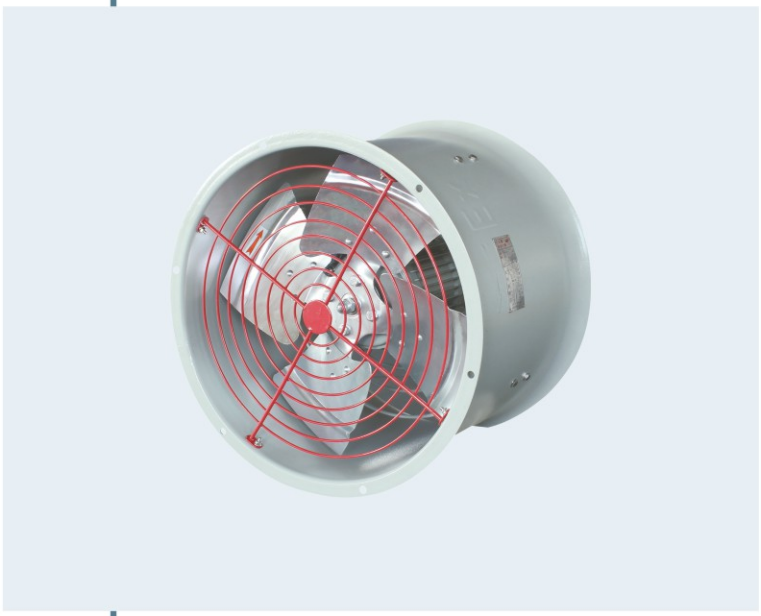

- Explosion protection to
  -CENELEC
  -IEC
- Can be used in
  Zone 1 and Zone 2
- The explosion-proof axial flow fan is composed of an explosion-proof motor, blades, and a wind duct among other components.
- The housing material can be either steel plate or fiberglass reinforced plastic.

Catalogue number logic

BT35 - □ / □ □ □

- Enclosure Material: Q: Steel Plate; B: Fiberglass Reinforced Plastic
- I: Wall-mounted
- II: Pedestal-mounted
- III: Fixed-mounted
- IV: Conduit-mounted
- Machine number
- Design no.
- Explosion-proof axial fans

Technical data

Explosion-proof axial fans	BT35-□/□□□
Explosion protection	
Global (IECEx)	IECEx (applied for)
Gas	Ex db IIC T4 Gb
Europe (ATEX)	ATEX (applied for)
Gas	Ⓔx II 2 G Ex db IIC T4 Gb
Certificates	IECEx; ATEX
Conformity to standards	EN 60079-0, EN 60079-1, IEC 60079-0, IEC 60079-1
Rated voltage	BT35-11-2.8~BT35-11-5: 220V/380V BT35-11-5.6~BT35-11-7.1: 380V
Spindle speed	1450r/min
Inlet thread	G3/4"
Cable outer diameter	Φ10mm~Φ14mm

Zones 1&2

Exhaust Fans
BT35 Series Explosion-proof Axial Fans

Selection table

Machine number	Impeller diameter (mm)	Impeller circumference speed (m/s)	Impeller rotation speed (r/min)	Impeller angle (deg)	Air volume (m^3/h)	Total pressure (mmH_2O)	Efficiency	Motor power (kW)
2.8#	265	42.5	2900	15	1649	15.5	0.87	0.18
				20	2167	17.2	0.88	
				25	2685	17.7	0.89	
				30	2921	19	0.88	
				35	3202	23.7	0.86	0.25
		21.3	1450	15	826	3.8	0.87	0.18
				20	1086	4.4	0.88	
				25	1346	4.5	0.89	
				30	1464	4.9	0.88	
				35	1605	6.1	0.86	
3.15#	295	47.5	2900	15	2339	19.6	0.87	0.18
				20	3074	21.8	0.88	0.25
				25	3810	22.4	0.89	0.37
				30	4414	24.2	0.88	
				35	4545	30	0.86	0.55
		23.9	1450	15	1169	4.9	0.87	0.18
				20	1537	5.4	0.88	
				25	1905	5.6	0.89	
				30	2072	6.0	0.88	
				35	2273	7.5	0.86	
3.55#	335	53.9	2900	15	3367	24.6	0.87	0.37
				20	4426	27.7	0.88	
				25	5484	28.4	0.89	0.55
				30	5965	30.6	0.88	
				35	6542	38.0	0.86	
		27.0	1450	15	1680	6.2	0.87	0.25
				20	2208	6.9	0.88	
				25	2737	7.1	0.89	
				30	3265	7.6	0.88	
				35	3977	9.5	0.86	
4#	390	60.7	2900	15	4806	31.6	0.87	0.55
				20	6316	35.2	0.88	
				25	7826	36.1	0.89	0.75
				30	8513	39.8	0.88	1.1
				35	9336	48.3	0.86	
		30.4	1450	15	2406	7.9	0.87	0.55
				20	3163	8.8	0.88	
				25	3922	9.0	0.89	
				30	4263	9.7	0.88	
				35	4678	12.1	0.86	
4.5#	435	34.2	1450	15	3427	10.0	0.87	0.55
				20	4504	11.2	0.88	
				25	5881	11.5	0.89	
				30	6070	12.3	0.88	
				35	6658	15.3	0.86	

Exhaust Fans
BT35 Series Explosion-proof Axial Fans

Selection table

Machine number	Impeller diameter (mm)	Impeller circumference speed (m/s)	Impeller rotation speed (r/min)	Impeller angle (deg)	Air volume (m^3/h)	Total pressure (mmH_2O)	Efficiency	Motor power (kW)
5#	490	38.0	1450	15	4700	12.4	0.87	0.55
				20	6178	13.8	0.88	0.75
				25	7655	14.1	0.895	
				30	8832	15.2	0.88	
				35	9133	18.9	0.86	
		25.1	960	15	3314	5.4	0.87	0.37
				20	4129	6.0	0.88	
				25	5117	6.2	0.895	
				30	5566	6.6	0.88	
				35	6104	8.3	0.86	
5.6#	540	42.5	1450	15	6595	15.4	0.87	0.75
				20	8667	17.2	0.88	
				25	10739	17.7	0.895	
				30	11682	19.0	0.88	1.1
				35	12812	23.7	0.86	
		28.1	960	15	4362	6.8	0.87	0.37
				20	5730	7.5	0.88	
				25	7101	7.7	0.895	
				30	7724	8.3	0.88	
				35	8471	10.3	0.86	
6.3#	590	47.8	1450	15	9393	21.7	0.87	0.75
				20	12345	24.1	0.88	1.1
				25	15297	24.7	0.895	1.5
				30	16639	24.1	0.88	
				35	18250	30.3	0.86	2.2
		31.7	960	15	6219	8.6	0.87	0.75
				20	8173	9.6	0.88	
				25	10128	9.8	0.895	
				30	11016	10.6	0.88	
				35	12082	13.1	0.86	
7.1#	690	53.9	1450	15	13444	24.9	0.87	2.2
				20	17670	27.7	0.88	
				25	21895	28.8	0.895	
				30	23815	30.6	0.88	3
				35	26120	38.0	0.86	4
		36.7	960	15	8902	11.0	0.87	0.75
				20	11700	12.2	0.88	
				25	14498	12.5	0.895	
				30	15769	13.4	0.88	
				35	17296	16.7	0.86	

Dimension drawings (all dimensions in mm) - subject to alteration

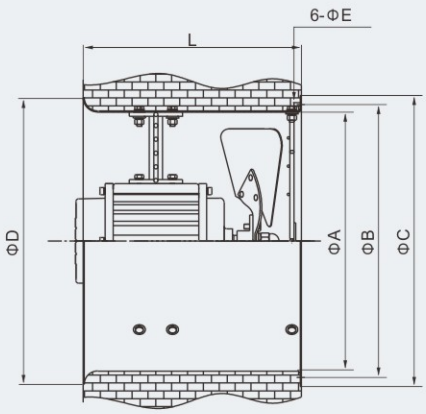

Wall-mounted (I)

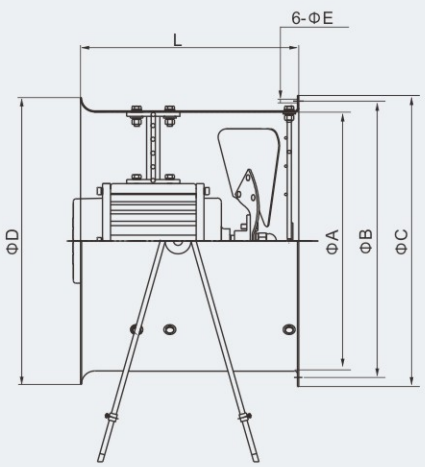

Pedestal-mounted (II)

Model	L	L1(Conduit-mounted)	ΦA	ΦB	ΦC	ΦD	ΦE
BT35-11-2.8	275(255)	300	283(285)	305	325(355)	320(355)	8.5
BT35-11-3.15	275(285)	275	315(320)	340	360(400)	355(405)	8.5
BT35-11-3.55	313(325)	300	355(363)	380	400(440)	395(450)	8.5
BT35-11-4.0	315(350)	330	418(408)	442	462(495)	455(500)	8.5
BT35-11-4.5	315(350)	330	454(458)	478	498(545)	494(560)	8.5

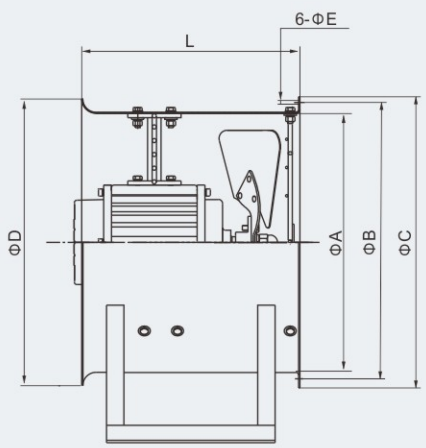

Fixed-mounted (III)

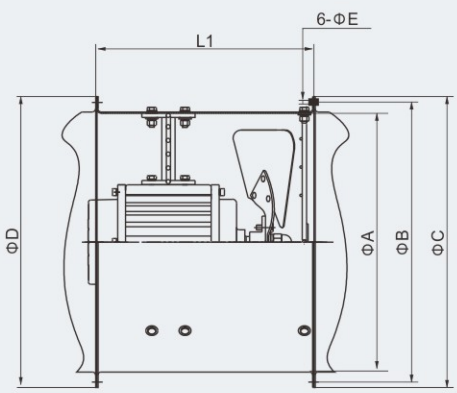

Conduit-mounted (IV)

Model	L	L1(Conduit-mounted)	ΦA	ΦB	ΦC	ΦD	ΦE
BT35-11-5.0	315(365)	330	520(508)	545	565(595)	555(615)	8.5
BT35-11-5.6	405(420)	390	563(575)	590	610(670)	600(695)	8.5
BT35-11-6.3	405(468)	390	610(640)	635	655(740)	650(760)	8.5
BT35-11-7.1	515(510)	500	710(710)	735	755(830)	750(865)	8.5

Air Conditioners
BKF Series Explosion-proof Wall Air Conditioners (IIB)



- Explosion protection to
  -CENELEC
  -IEC
- Can be used in
  Zone 1 and Zone 2
- For explosion-proof wall air conditioner, both cooling-only and cooling & heating products in T1, T2, and T3 are available, to meet different requirements of low, medium and high temperature zones in the world.
- Explosion-proof wall air conditioner is based on renowned brand, by taking explosion-proof measures to indoor and outdoor units. Measures to outdoor unit: by taking special technics and control, conduct explosion-proof treatment to internal control units, compressor, outdoor fan motor, protective system, heat-removal system, cooling system, etc. Besides, explosion-proof control box and sensor system are applied with intrinsic safety. The outline dimensions and installation are the same as the prototype after explosion-proof treatment. Indoor unit: by taking special technics and control, dismantle internal electric control units and redesign explosion-proof structure which enables explosion-proof control box seperated. Remote controller and sensor system are applied with intrinsic safety. The out-line dimensions and installation are the same as the prototype after explosion-proof treatment.

Catalogue number logic

BK F - □ / □

- Rated voltage
- Percentage of nominal cooling capacity
- Wall type
- Explosion-proof air conditioner

Dimension drawings (all dimensions in mm) - subject to alteration

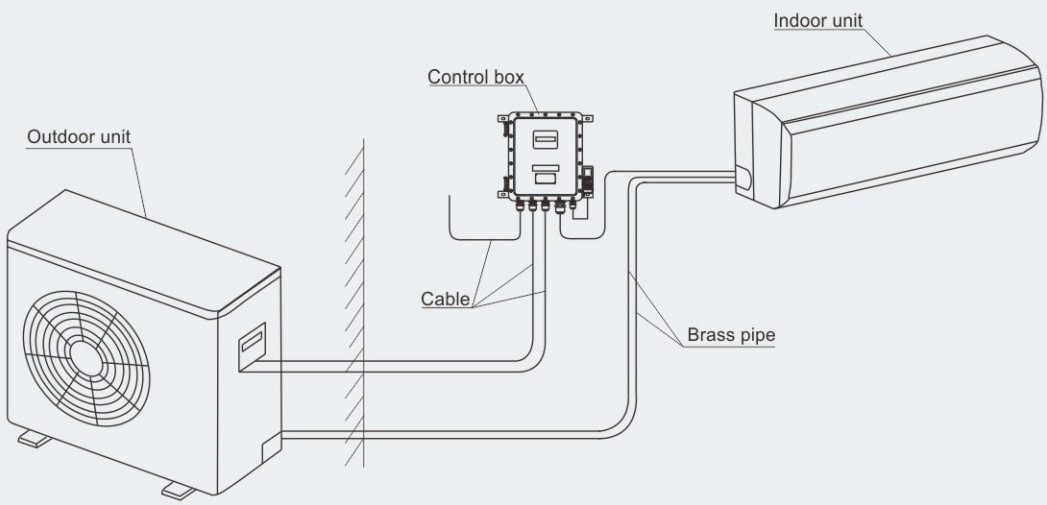

Zones 1&2

Technical data

Explosion-proof wall air conditioners BKF-□/□

Explosion protection	**Outdoor unit** BYS Compressor Ⓔx II 3 G Ex nC II 146℃(T3) BZC Control station Ⓔx II 3 G Ex d IIB BDJ-W Fan motor Ⓔx II 3 G Ex d IIB **Indoor unit** BDJ-N Fan motor Ⓔx II 2 G Ex d IIB T4 BXK Control station Ⓔx II 2 G Ex d [ib] ib IIB T4	**Outdoor unit** Ex d nC IIB 146℃ **Indoor unit** Ex d [ib] ib IIB T4 **Whole unit** Ex nC d [ib] ib IIB 146℃
Certificates	LCIE 08 ATEX 6031X	IECEx CQM 08.0017X
Conformity to standards	IECEx; ATEX; CU-TR EN 60079-0, EN 60079-1, EN 60079-11, EN 60079-15 IEC 60079-0, IEC 60079-1, IEC 60079-11, IEC 60079-15	

Technical data

Type		BKF-50/220	BKF-71/220
Cooling capacity	**W**	5275	7066
	BTU	18000*	24000*
Rated voltage / Frequency (V/Hz)		220~240/50	220~240/50
Input power (P)		2P	3P
Cooling input power / Current (W/A)		2300/10.5	3100/14.9
Application areas (m^2)		24~36	29~48
Sound level (dB)	**Indoor unit**	43*	44*
	Outdoor unit	54*	55*
Outline dimensions (L x W x H) (mm)	**Indoor unit**	960 x 385 x 245*	1100 x 358 x 294*
	Outdoor unit	910 x 690 x 390*	910 x 690 x 390*
	Control box	420 x 350 x 178	420 x 350 x 178
Weight (kg)	**Indoor unit**	21.00*	25.00*
	Outdoor unit	62.00*	65.00*
	Control box	21.00	21.00

Note: 1. The above technical data is for normally supplied products of T3 (-7℃~+52℃) temperature class, voltage is 220~240V AC/50Hz, other voltages are available, for example 220~240V AC/60Hz, please specify when ordering.
2. The above data is only for reference, the actual product shall prevail.
3. Data with "*" are for reference. The specific kind prevail.

Air Conditioners
BKF(R) Series Explosion-proof Wall Air Conditioners (IIC)



- Explosion protection to
  -CENELEC
  -IEC
- Can be used in
  Zone 1 and Zone 2
  Zone 21 and Zone 22
- For explosion-proof wall air conditioner, both cooling-only and cooling & heating products in T1, T2, and T3 are available, to meet different requirements of low, medium and high temperature zones in the world.
- Explosion-proof wall air conditioner is based on renowned brand,by taking explosion-proof measures to indoor and outdoor units. Measures to outdoor unit: by taking special technics and control, conduct explosion-proof treatment to internal control units, compressor, outdoor fan motor, protective system, heat-removal system, cooling system, etc. Besides, explosion-proof control box and sensor system are applied with intrinsic safety. The outline dimensions and installation are the same as the prototype after explosion-proof treatment. Indoor unit: by taking special technics and control, dismantle internal electric control units and redesign explosion-proof structure which enables explosion-proof control box seperated. Remote controller and sensor system are applied with intrinsic safety. The outline dimensions and installation are the same as the prototype after explosion-proof treatment.

Catalogue number logic

BK F (R) - □ / □

- Rated voltage
- Percentage of nominal cooling capacity
- Heating and cooling type
- Wall type
- Explosion-proof air conditioner

Dimension drawings (all dimensions in mm) - subject to alteration

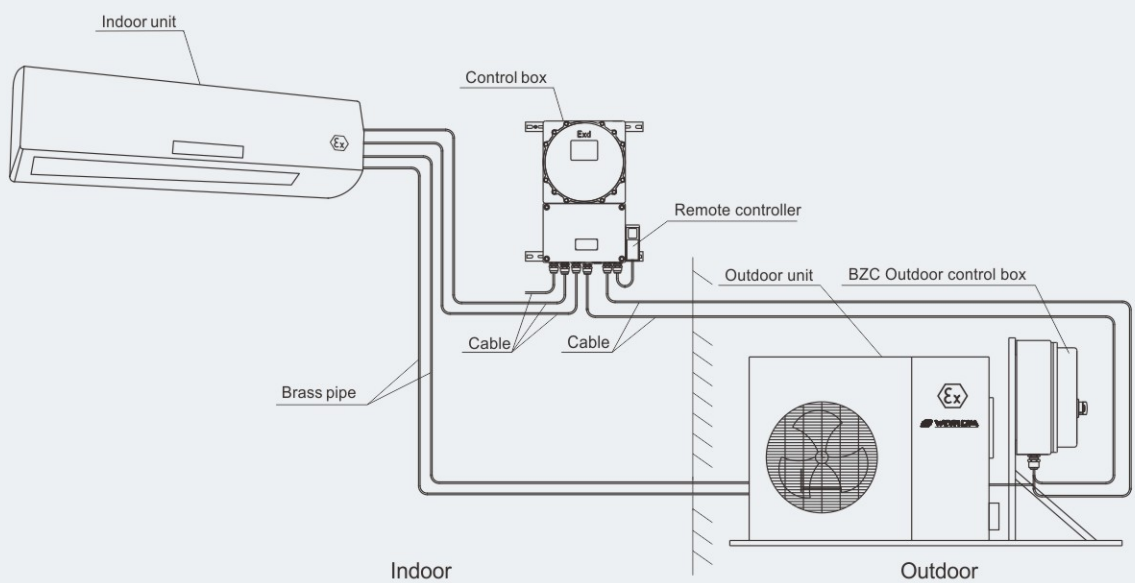

Zones 1&2; 21&22

Technical data

Explosion-proof wall air conditioners BKF(R)-□/□

Explosion protection	
Global (IECEx)	IECEx CQM 14.0001X
Gas and dust	Ex d e ib mb px IIC T4 Gb
	Ex ibD tb pD IIIC T130℃ Db IP66
Europe (ATEX)	EUT 14 ATEX 1235
Gas and dust	Ⓔx II 2 G Ex d e ib mb px IIC T4 Gb
	Ⓔx II 2 D Ex ib tb pD IIIC T130℃ Db IP66
Certificates	IECEx; ATEX; CU-TR
Conformity to standards	EN 60079-0, EN 60079-1, EN 60079-2, EN 60079-7, EN 60079-11, EN 60079-18
	EN 60079-31, EN 61241-4, EN 13463-1
	IEC 60079-0, IEC 60079-1, IEC 60079-2, IEC 60079-7, IEC 60079-11, IEC 60079-18
	IEC 60079-31, IEC 61241-4, IEC 61241-11

Technical data

Type		BKF(R)-50/220	BKF(R)-71/220
Cooling capacity	**W**	5275	7032
	BTU	18000*	24000*
Heating capacity (W)		5600	6600
Rated voltage/Frequency (V/Hz)		220~240/50	220~240/50
		220~240/60	220~240/60
Input power (P)		2P	3P
Cooling input power/Current (W/A)		1432/6.5	2200/10
Heating input power/Current (W/A)		1690/7.68	2600/11.8
Application areas (m^2)		22~37	27~44
Sound level (dB)	**Indoor unit**	43*	44*
	Outdoor unit	54*	54*
Outline dimensions (L x W x H) (mm)	**Indoor unit**	960 x 385 x 245*	1070 x 400 x 275*
	Outdoor unit	1450 x 900 x 700*	1450 x 900 x 700*
	Control box	690 x 430 x 211	690 x 430 x 211
Weight (kg)	**Indoor unit**	21.00*	25.00*
	Outdoor unit	146.00*	148.00*
	Control box	30.00	30.00

Note: 1. The above technical data is for normally supplied products of T3 (-7℃~+52℃) temperature class, voltage is 220~240V AC/50Hz, other voltages are available, for example 220~240V AC/60Hz, please specify when ordering.
2. The above data is only for reference, the actual product shall prevail.
3. Data with "*" are for reference. The specific kind prevail.

Pressurized Products
PXK Series Explosion-proof Pressurized Distribution Cabinets



- Explosion protection to
  -CENELEC
  -IEC
- Can be used in
  Zone 1 and Zone 2
  Zone 21 and Zone 22
- Explosion-proof types IIC.
- Available in types Q, T, K.
- The product consists of main cavity and auxiliary cavity. The main cavity is of pressurized cavity, with electrical components that users need and pressure check sensor system, ventilation air distribution system, and air conditioning system, etc.; the auxiliary cavity is installed with explosion-proof ventilation auto-control system, explosion-proof power auto-off system, explosion-proof alarm system, explosion-proof pressure display system, and air in/out connector; the auxiliary cavity with auto-air supply is equipped with explosion-proof air supply device.
- Cabinet type product adopts GGD frame; the main cavity and auxiliary cavity are of left and right structure;cable channel is of horizontal installation type; bottom inlet, front operation and back overhauling.
- Cabinet type product adopts high quality steel plate welding structure; the main cavity and auxiliary cavity are of up and down structure; wall type installation; bottom inlet, front operation and back overhauling.
- The back doors of cabinet type and console type are of rapid opening device, convenient for user to install and overhaul.

Catalogue number logic

PXK - □ / □ □

- Protection type: Px & Pz
- Cabinet type I: K1, K2, K3.....K15
- Console type: Q
- Special requirement:T
- T: ventilated type; B: compensated type
- Explosion-proof pressurized distribution cabinets



Ex pz IIC



Ex px IIC



Ex px IIC

Zones 1&2; 21&22

Pressurized Products
PXK Series Explosion-proof Pressurized Distribution Cabinets

Technical data

Explosion-proof pressurized distribution cabinets (Ex pz IIC) PXK-□/□□

Explosion protection	
Global (IECEx)	IECEx EUT 17.0002X
Gas and dust	Ex pzc IIC T5 Gc Ex pzc IIIC T95℃ Dc
Europe (ATEX)	EPT 15 ATEX 0187
Gas and dust	Ⓔx II 3 G Ex pz IIC T5 Gc Ⓔx II 3 D Ex pD IIIC T95℃ Dc IP66
CUTR	RU C-CN.МЮ62.B.00413/19
Gas and dust	2 Ex pz IIC T6 Gc / Ex tb IIIC T80℃ Db IP66 2 Ex pz IIC T4 Gc / Ex tb IIIC T130℃ Db IP66
Certificates	IECEx; ATEX; CUTR; INMETRO
Conformity to standards	EN 60079-0, EN 60079-2, EN 61241-4, IEC 60079-0, IEC 60079-2
Positive pressure value	200Pa~800Pa(0.002bar~0.008bar)
Air sourre	0.2MPa~0.8MPa (2bar~8bar)
Rated voltage	Max.690V AC 50/60Hz, 500V DC
Rated current	Max.630A
Enclosure material	Stainless steel or powder coated carbon steel
Degree of protection	IP66
Ambient temperature	IECEx, ATEX: -10℃~+55℃ CUTR: -20℃~+55℃(T6/T80℃); -20℃~+75℃(T4/T130℃)

Selection table

Type	Outline W×H×D (mm)	Main cavity W×H×D (mm)	Auxiliary cavity W×H×D (mm)	Effective dimension of main cavity operation panel W×H (mm)	Installation (mm)	Enclosure weight (kg)
K1	680 x 1400 x 385	680 x 1000 x 345	680 x 280 x 345	400 x 700	600 x 180	30.00
K2	880 x 1400 x 385	880 x 1000 x 345	880 x 280 x 345	580 x 700	800 x 180	40.00
K3	1000 x 1400 x 440	1000 x 1000 x 400	1000 x 280 x 345	700 x 700	920 x 280	50.00
K4	1000 x 1400 x 650	1000 x 1000 x 600	1000 x 280 x 345	700 x 700	920 x 459	60.00
K5	1000 x 1400 x 870	1000 x 1000 x 820	1000 x 280 x 345	700 x 700	920 x 679	70.00
K6	1000 x 1680 x 440	1000 x 1280 x 400	1000 x 280 x 345	700 x 980	920 x 280	60.00
K7	1000 x 1680 x 650	1000 x 1280 x 600	1000 x 280 x 345	700 x 980	920 x 459	75.00
K8	1000 x 1680 x 870	1000 x 1280 x 820	1000 x 280 x 345	700 x 980	920 x 679	90.00
K9	1000 x 1830 x 440	1000 x 1430 x 400	1000 x 280 x 345	700 x 1130	920 x 280	70.00
K10	1000 x 1830 x 650	1000 x 1430 x 600	1000 x 280 x 345	700 x 1130	920 x 459	90.00
K11	1000 x 1830 x 870	1000 x 1430 x 820	1000 x 280 x 345	700 x 1130	920 x 679	105.00
K12	1200 x 1920 x 870	1200 x 1800 x 820	700 x 300 x 250	900 x 1500	1120 x 679	130.00
K13	1000 x 1920 x 870	1000 x 1800 x 820	700 x 300 x 250	700 x 1500	920 x 679	110.00
K14	1200 x 2350 x 870	1200 x 2200 x 820	700 x 300 x 250	900 x 1900	1120 x 679	150.00
K15	1000 x 2350 x 870	1000 x 2200 x 820	700 x 300 x 250	700 x 1900	920 x 679	140.00

Pz series pressurized cabinets

- It is a pressurized explosion-proof cabinet designed for Zone 2; compared with Px series, Pz series leave out the safety device that checks ventilation time, and only marks the ventilation time; it is operated according to requirement before energizing of main cavity by user; when air pressure is lower than 100Pa, the auto-control system automatically alarms (audio and visual);opens air inflow and automatically adjusts inner air; when air inflow successes, it recovers to normal; if not, the air pressure decreases to 60Pa; the system does not automatically de-energize, but continues to alarm.

Ordering information

- Please specify the product type when ordering according to Catalogue Number Logic;
- Users should provide electrical system drawing, control schematic diagram, brand of inner components, layout drawing of panel components, cable size of inlet/outlet and quantity, etc..

Pressurized Products
PXK Series Explosion-proof Pressurized Distribution Cabinets

Technical data

Explosion-proof pressurized distribution cabinets (Ex db eb pxb IIC) PXK-□/□□

Explosion protection	
Global (IECEx)	IECEx CQM 19.0019X
Gas and dust	Ex db eb pxb IIC T4 Gb
	Ex pxb tb IIIC T130℃ Db IP66
Europe (ATEX)	ATEX (applied for)
Gas and dust	Ⓔx II 2 G Ex db eb pxb IIC T4 Gb
	Ⓔx II 2 D Ex pxb tb IIIC T130℃ Db IP66
CUTR	RU C-CN.HA65.B.01389/22
Gas and dust	1 Ex db px IIC T4 Gb X
	Ex px tb IIIC T130℃ Db X
Certificates	IECEx; ATEX; CUTR; INMETRO
Conformity to standards	EN 60079-0, EN 60079-1, EN 60079-2, EN 60079-7, EN 60079-31
	IEC 60079-0, IEC 60079-1, IEC 60079-2, IEC 60079-7, IEC 60079-31
Positive pressure value	200Pa~800Pa(0.002bar~0.008bar)
Air pressure	0.2MPa~0.8MPa (2bar~8bar)
Rated voltage	Max.1000V AC 50/60Hz
	Max.1500V DC
Rated current	Max.630A
Enclosure material	Powder coated carbon steel or stainless steel
Ambient temperature	-40℃~+55℃

Selection table

Model	Outline dimension (mm)	Positive pressure cavity volume (m^3)	Ventilation flow (m^3/h)	Ventilation time (min)	Air leakage (m^3/h)
K1	600 x 600 x 350	0.126	10	5	2
K2	600 x 800 x 350	0.168		6	
K3	800 x 1000 x 350	0.28		9	
K4	800 x 1200 x 400	0.384		13	
K5	800 x 1200 x 600	0.576		18	
K6	800 x 1600 x 600	0.64		20	
K7	800 x 2000 x 600	0.96		29	
K8	1000 x 1800 x 600	1.08		33	
K9	1000 x 2000 x 600	1.2		40	
K10	1200 x 2000 x 600	1.44		45	
K11	1000 x 2000 x 800	1.6		48	
K12	1200 x 2000 x 800	1.92		58	
K13	1400 x 2000 x 800	2.24		68	

Px series pressurized cabinets

- The components of pressurized cavity of console type product are mainly used for on-site control components, analysis instrument, centralized control and signal contact; and used for on-site continuous operation and monitoring;
- Computer can be installed on request;
- Special design is on request.

Ordering information

- Please specify the product type when ordering according to Catalogue Number Logic;
- Users should provide electrical system drawing, control schematic diagram, brand of inner components, layout drawing of panel components, cable size of inlet/outlet and quantity, etc..

Dimension drawings (all dimensions in mm) - subject to alteration

Ex pz IIC

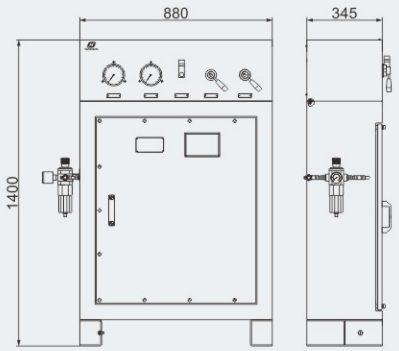

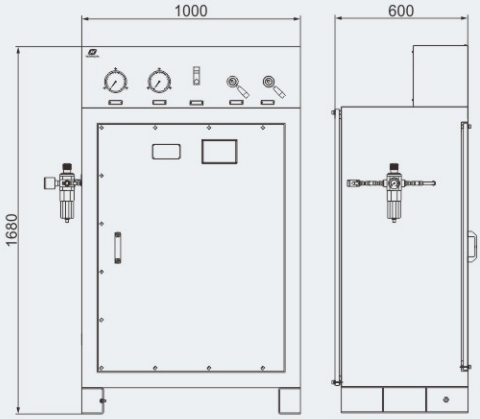

Ex px IIC

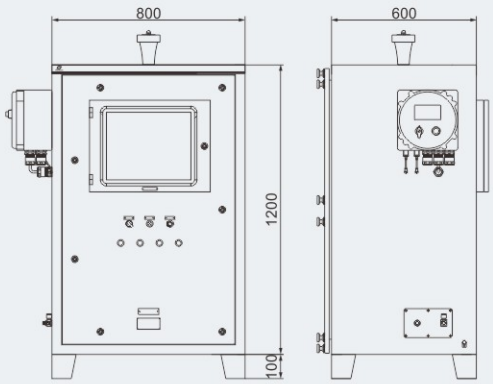

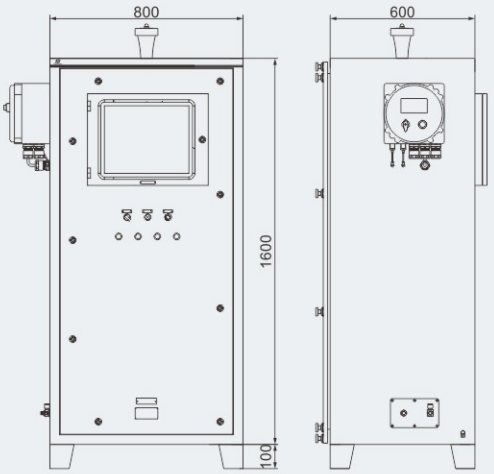

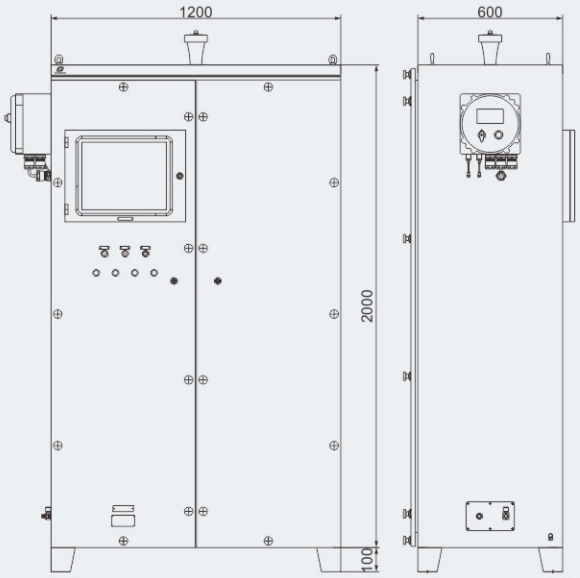

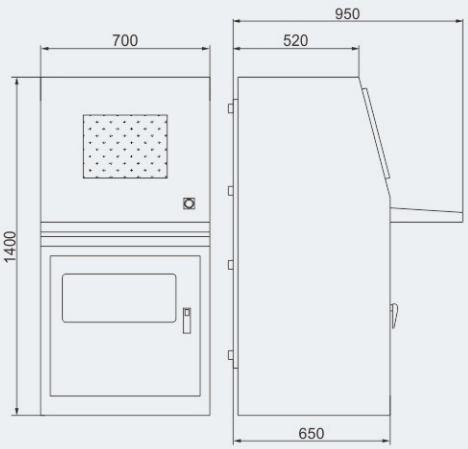

Engineering Cabins
PXB Series Explosion-proof Engineering Cabins



- Explosion protection to
  -CENELEC
  -IEC
- Can be used in
  Zone 1 and Zone 2
  Zone 21 and Zone 22
- Enclosure in carbon steel or stainless steel
- The explosion-proof control box is the standard control box or PLC programmed control box. Combustible gas detector and toxic gas detector are modular designed. The thermal detector, smoking detector, and pressure transmitter are intrinsic safety explosion-proof components. The power of explosion-proof centrifugal fan is subject to the room size. The type of explosion-proof air conditioner is subject to the room size. With audio and visual alarm interlock system. Illumination system is the explosion-proof fluorescent lamp. The light source of explosion-proof emergency lamp is LED.

Catalogue number logic

PXB - □/□

- T(carbon steel)
- S(stainless steel)
- I: 12' (12' x 8' x 9')
- II: 20' (20' x 8' x 9')
- T: Special dimensions on request
- Explosion-proof engineering cabins

- This product is welded by steel structure.
- A60 Zone I Rated.
- DNV 2.7-1, 2.7-2 Rated Structure.
- Protected with fire detection.
- Gas detection system.
- Fitted with dedicated air conditioning system.
- With continuous clean gas filled; keep the internal air fresh and safe.
- Automatic fire dampers (fail safe).
- Equipped with fire extinguishers.
- Two airtight doors, equipped with viewing window and emergency exit.
- Special requirement on request.







Zones 1&2; 21&22

Technical data

Explosion-proof engineering cabins (Ex px IIB) PXB-□/□□

Explosion protection	
Global (IECEx)	IECEx CQM 14.0009X
Gas and dust	Ex px IIB T4 Gb
	Ex px IIIC T130℃ Db
Europe (ATEX)	ATEX (applied for)
Gas and dust	Ⓔx II 2 G Ex px IIB T4 Gb
	Ⓔx II 2 D Ex px IIIC T130℃ Db
Certificates	IECEx; ATEX
Conformity to standards	EN 60079-0, EN 60079-13
	IEC 60079-0, IEC 60079-13
Normal operating pressure	50Pa~100Pa(0.0005bar~0.001bar)
Air pressure	0.4MPa~0.8MPa(4bar~8bar)
Rated voltage of user system	220V/380V/400V/440V/460V/660V/690V AC
Rated voltage of pressurized control system	220V/380V AC 50/60Hz
Rated current of pressurized control system	10A
Enclosure material	Powder coated carbon steel or stainless steel
Degree of protection	IP66
Ambient temperature	-20℃~+55℃

Dimension drawings (all dimensions in mm) - subject to alteration

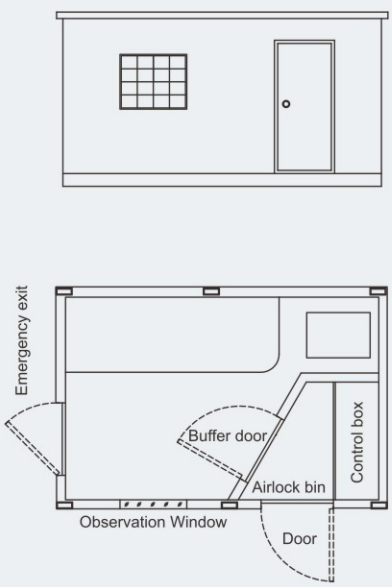

PXB-I (12' x 8' x 9')

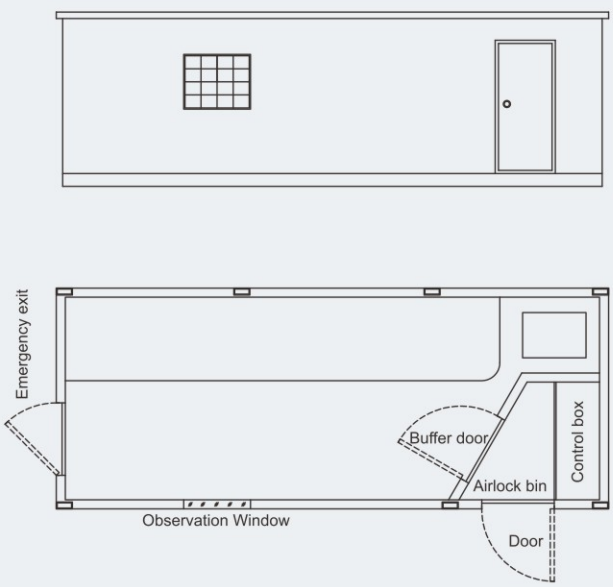

PXB-II (20' x 8' x 9')

Camera
BJK-S/G Series Explosion-proof Camera



BJK-S/G wired transmission



BJK-S/GW wireless transmission

- Explosion protection to
  -CENELEC
  -IEC
- Can be used in
  Zone 1 and Zone 2
  Zone 21 and Zone 22

Catalogue number logic

BJK - S / G □ □ □ □

- Focal length parameters (or optical zoom parameters)
- Pixel parameters
- None: Wired transmission
- W: Wireless transmission
- I: 4x optical zoom
- II: 20/30x optical zoom
- T: Special customization
- Stainless steel
- Camera
- Explosion-proof monitoring series

Product characteristics

- The explosion-proof camera is used as a fixed terminal in the intelligent video surveillance system for on-site scanning transmission, real-time video transmission or real-time video storage, remote network image transmission and other functions;
- Suitable for fixed-point monitoring of key areas; equipped with semi-fixed PTZ, whose angles can be adjusted vertically and horizontally;
- Intelligent temperature control devices can be installed inside, and the product can be applied to -60℃ to +63℃ harsh working conditions;
- The camera is configured with wireless module for transmitting video signals by using 4G, 5G, WIFI, and other wireless networks.

Zones 1&2; 21&22

Technical data

Explosion-proof camera (Ex db IIC)	BJK-S/G□□□□
Explosion protection	
Global (IECEx)	IECEx TUR 22.0044X
Gas and dust	Ex db IIC T6 Gb
	Ex tb IIIC T80℃ Db
Europe (ATEX)	TÜV 22 ATEX 8864 X
Gas and dust	Ⓔx II 2 G Ex db IIC T6 Gb
	Ⓔx II 2 D Ex tb IIIC T80℃ Db
Certificates	IECEx; ATEX
Conformity to standards	EN IEC 60079-0, EN 60079-1, EN 60079-31
	IEC 60079-0, IEC 60079-1, IEC 60079-31
Rated voltage	176-264VAC, 88-132VAC, 24VAC, 24VDC and 12VDC
Resolution	2 million pixels
	3 million pixels
	4 million pixels
Minimum illumination	
Color	≤0.001lx (AGC ON)
Black & White	≤0.0001lx (AGC ON)
Video coding format	H.265, H.264, H.264B, MJPEG
Wireless module	Support 4G, 5G, WIFI connection
Housing material	304 stainless steel or 316 or 316L
Degree of protection	IP66/IP68
Ambient temperature	-60℃~+63℃
Cable gland	2×M20×1.5 or NPT 1/2" inlet port, suitable for Φ6.5mm~Φ14.5mm cable
Installation method	Fixed bracket, base, column
Weight	5kg

Dimension drawings (all dimensions in mm) - subject to alteration

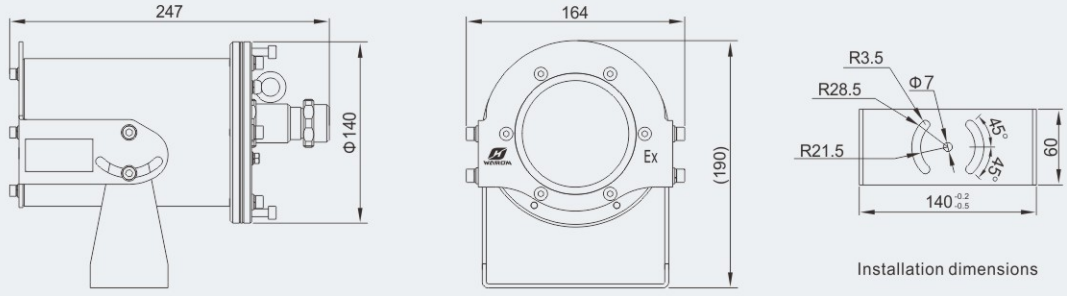

Installation dimensions

Camera
BJK-S/GD Series Explosion-proof Camera



BJK-S/GD wired transmission



BJK-S/GDW wireless transmission

- Explosion protection to
  -CENELEC
  -IEC
- Can be used in
  Zone 1 and Zone 2
  Zone 21 and Zone 22

Catalogue number logic

BJK - S / G D □ □ □ □

- Focal length parameters (or optical zoom parameters)
- Pixel parameters
- None: Wired transmission
- W: Wireless transmission
- I: 4x optical zoom
- II: 20/30x optical zoom
- T: Special customization
- With infrared function
- Stainless steel
- Camera
- Explosion-proof monitoring series

Product characteristics

- The explosion-proof camera is used as a fixed terminal in the intelligent video surveillance system for on-site scanning transmission, real-time video transmission or real-time video storage, remote network image transmission and other functions;
- With infrared fill light function, the light can be changed to white light as needed;
- Suitable for fixed-point monitoring of key areas; equipped with semi-fixed PTZ, whose angles can be adjusted vertically and horizontally;
- Intelligent temperature control devices can be installed inside, and the product can be applied to -60℃ to +63℃ harsh working conditions;
- The camera is configured with wireless module for transmitting video signals by using 4G, 5G, WIFI, and other wireless networks.

Zones 1&2; 21&22

Technical data

Explosion-proof camera (Ex db IIC)	BJK-S/GD□□□□
Explosion protection	
Global (IECEx)	IECEx TUR 22.0044X
Gas and dust	Ex db IIC T6 Gb
	Ex tb IIIC T80℃ Db
Europe (ATEX)	TÜV 22 ATEX 8864 X
Gas and dust	Ⓔx II 2 G Ex db IIC T6 Gb
	Ⓔx II 2 D Ex tb IIIC T80℃ Db
Certificates	IECEx; ATEX
Conformity to standards	EN IEC 60079-0, EN 60079-1, EN 60079-31
	IEC 60079-0, IEC 60079-1, IEC 60079-31
Rated voltage	176-264VAC, 88-132VAC, 24VAC, 24VDC and 12VDC
Resolution	2 million pixels
	3 million pixels
	4 million pixels
Minimum illumination	
Color	≤0.001lx (AGC ON)
Black & White	≤0.0001lx (AGC ON)
Infrared fill light distance	30m, 50m, 100m
Video coding format	H.265, H.264, H.264B, MJPEG
Wireless module	Support 4G, 5G, WIFI connection
Housing material	304 stainless steel or 316 or 316L
Degree of protection	IP66/IP68
Ambient temperature	-60℃~+63℃
Cable gland	2×M20×1.5 or NPT 1/2" inlet port, suitable for Φ6.5mm~Φ14.5mm cable
Installation method	Fixed bracket, base, column
Weight	5kg

Dimension drawings (all dimensions in mm) - subject to alteration

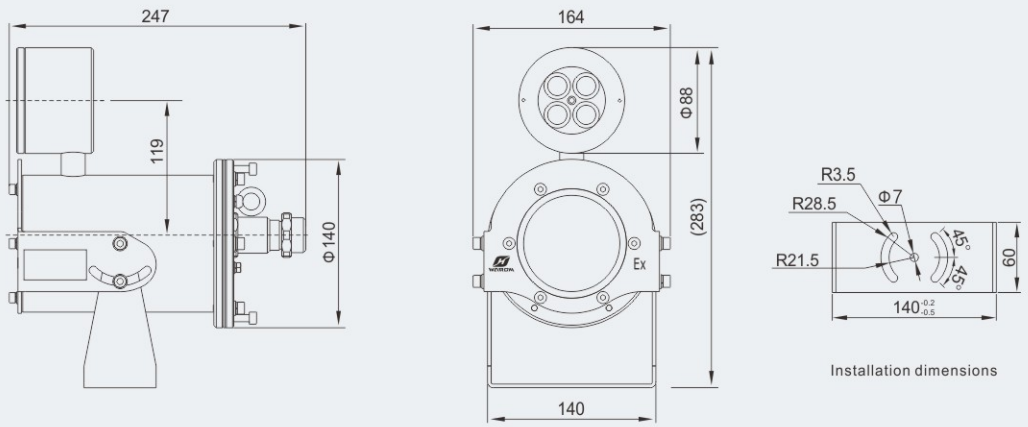

Camera
BJK-YT/B Series Explosion-proof Integrated Camera



BJK-YT/B wired transmission



BJK-YT/BW wireless transmission

- Explosion protection to
  -CENELEC
  -IEC
- Can be used in
  Zone 1 and Zone 2
  Zone 21 and Zone 22

Catalogue number logic

BJK - YT / B □ □ □ □ □ □

- Focal length parameters (or optical zoom parameters)
- Pixel parameters
- None: Wired transmission
- W: Wireless transmission
- None: With network electrical port
- X: With network optical port
- None: gear transmission
- P: Pure belt transmission
- Variable speed PTZ (0.1~42°/s)
- Integrated camera
- Explosion-proof monitoring series

Product characteristics

- The explosion-proof integrated camera is used as a fixed terminal in the intelligent video surveillance system for on-site video image perception upload and other functions; the device has a variety of intelligent behavioral detection; support the linkage action of multiple trigger rules;
- Suitable for all-round monitoring of key areas; the product supports horizontal 360° rotating and vertical ±90° rotating;
- Intelligent temperature control devices can be installed inside, and the product can be applied to -60℃ to +63℃ harsh working conditions;
- The camera is configured with wireless module for connecting with the platform by using 4G, 5G, WIFI, and other wireless networks and Internet networks.

Zones 1&2; 21&22

Technical data

Explosion-proof camera (Ex db IIC)	BJK-YT/B□□□□□
Explosion protection	
Global (IECEx)	IECEx TUR 22.0054X
Gas and dust	Ex db IIC T6 Gb
	Ex tb IIIC T80℃ Db
Europe (ATEX)	TÜV 22 ATEX 8884 X
Gas and dust	Ⓔx II 2 G Ex db IIC T6 Gb
	Ⓔx II 2 D Ex tb IIIC T80℃ Db
Certificates	IECEx; ATEX
Conformity to standards	EN IEC 60079-0, EN 60079-1, EN 60079-31
	IEC 60079-0, IEC 60079-1, IEC 60079-31
Rated voltage	264VAC to 176VAC, 132VAC to 88VAC, 24VAC or 24VDC
Resolution	2 million pixels
	3 million pixels
	4 million pixels
Minimum illumination	
Color	≤0.001lx (AGC ON)
Black & White	≤0.0001lx (AGC ON)
Video coding format	H.265, H.264, H.264B, MJPEG
Angle adjustment	Horizontal 360° rotation, vertical -90°~+90° rotation
Wireless module	Support 4G, 5G, WIFI connection
Housing material	304 stainless steel or 316 or 316L
Degree of protection	IP66
Ambient temperature	-60℃~+63℃
Cable gland	M25×1.5 or NPT 3/4" inlet port, suitable for Φ10mm~Φ14mm cable
Installation method	Fixed bracket, base, column
Weight	30kg

Dimension drawings (all dimensions in mm) - subject to alteration

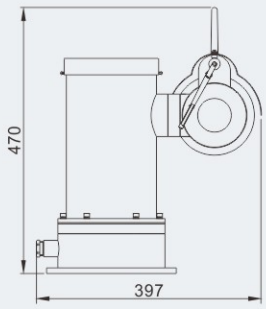

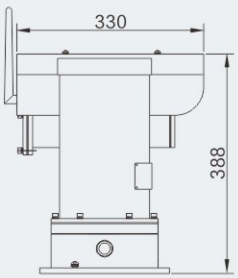

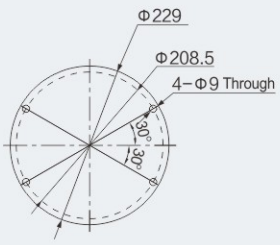

Installation dimensions

Camera
BJK-YT/BD Series Explosion-proof Integrated Camera



BJK-YT/BD wired transmission



BJK-YT/BDW wireless transmission

- Explosion protection to
  -CENELEC
  -IEC
- Can be used in
  Zone 1 and Zone 2
  Zone 21 and Zone 22

Catalogue number logic

BJK - YT / B D □ □ □ □ □ □

- Focal length parameters (or optical zoom parameters)
- Pixel parameters
- None: Wired transmission
- W: Wireless transmission
- None: With network electrical port
- X: With network optical port
- None: gear transmission
- P: Pure belt transmission
- With infrared function
- Variable speed PTZ (0.1~42°/s)
- Integrated camera
- Explosion-proof monitoring series

Product characteristics

- The explosion-proof integrated camera is used as a fixed terminal in the intelligent video surveillance system for on-site video image perception upload and other functions; the device has a variety of intelligent behavioral detection; support the linkage action of multiple trigger rules;
- With infrared fill light function, the light can be changed to white light as needed;
- Suitable for all-round monitoring of key areas; the product supports horizontal 360° rotating and vertical ±90° rotating;
- Intelligent temperature control devices can be installed inside, and the product can be applied to -60℃ to +63℃ harsh working conditions;
- The camera is configured with wireless module for connecting with the platform by using 4G, 5G, WIFI, and other wireless networks and Internet networks.

Zones 1&2; 21&22

Technical data

Explosion-proof camera (Ex db IIC)	BJK-YT/BD□□□□
Explosion protection	
Global (IECEx)	IECEx TUR 22.0054X
Gas and dust	Ex db IIC T6 Gb Ex tb IIIC T80℃ Db
Europe (ATEX)	TÜV 22 ATEX 8884 X
Gas and dust	Ⓔx II 2 G Ex db IIC T6 Gb Ⓔx II 2 D Ex tb IIIC T80℃ Db
Certificates	IECEx; ATEX
Conformity to standards	EN IEC 60079-0, EN 60079-1, EN 60079-31 IEC 60079-0, IEC 60079-1, IEC 60079-31
Rated voltage	264VAC to 176VAC, 132VAC to 88VAC, 24VAC or 24VDC
Resolution	2 million pixels 3 million pixels 4 million pixels
Minimum illumination	
Color	≤0.001lx (AGC ON)
Black & White	≤0.0001lx (AGC ON)
Infrared fill light distance	30m, 50m, 100m
Video coding format	H.265, H.264, H.264B, MJPEG
Angle adjustment	Horizontal 360° rotation, vertical -90°~+90° rotation
Wireless module	Support 4G, 5G, WIFI connection
Housing material	304 stainless steel or 316 or 316L
Degree of protection	IP66
Ambient temperature	-60℃~+63℃
Cable gland	M25×1.5 or NPT 3/4" inlet port, suitable for Φ10mm~Φ14mm cable
Installation method	Fixed bracket, base, column
Weight	30kg

Dimension drawings (all dimensions in mm) - subject to alteration

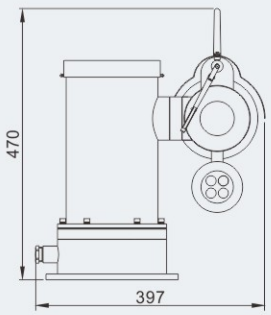

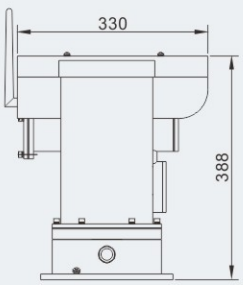

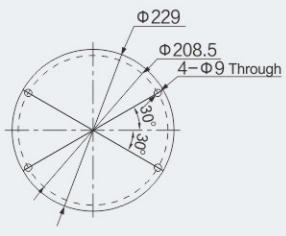

Installation dimensions

Explosion-proof Online Monitoring Analysis System
BXCQ Explosion-proof Overflow Static Grounding Control System

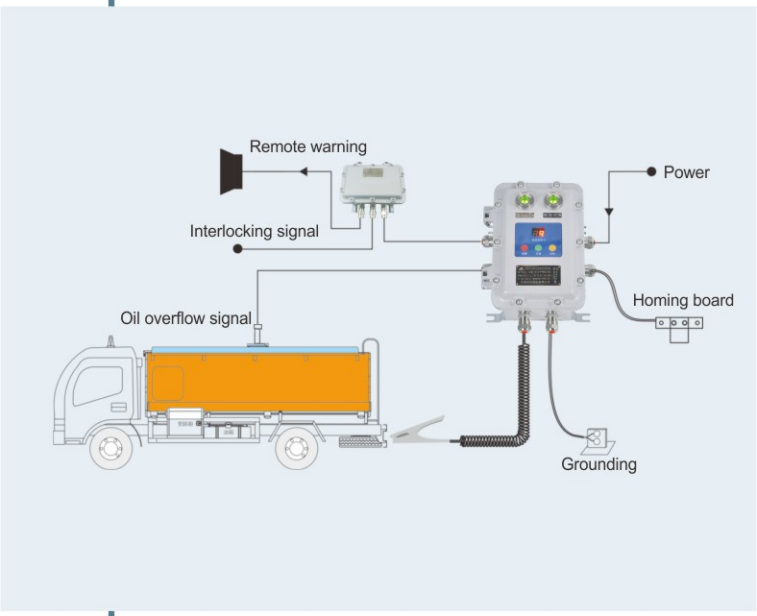

- Applied to explosive gas atmosphere Zone 1, Zone 2;
- Applied to IIA, IIB+H_2 explosive gas atmosphere;
- Applied to temperature group T1~T6;
- Ambient temperature: -50℃~+60℃/-60℃~+60℃;
- Widely used in monitoring and protection in petroleum, chemical, gas station, oil depot product platform, tank car assembly and disassembly, overflow static protector and quantitative loading system interlocking control. Avoid overflow accident, and ensure safety static grounding.

Executive Standard

- EN 60079-0, EN 60079-1, EN 60079-11, EN 60079-31, EN 60079-32.
- IEC 60079-0, IEC 60079-1, IEC 60079-11, IEC 60079-31, IEC 60079-32.
- GB/T 3836.1, GB/T 3836.2, GB/T 3836.4, GB/T 3836.31.

Catalogue number logic

BXCQ - □ □ C □ □

Intelligent voice	II: With intelligent voice function No note if not equipped
Feature code	L: Indicates the dual-purpose type No note of specially for tank car
Control system	
Function code	J: Indicates that the electrostatic grounding control function No note if not equipped
Function code	Y: Indicates that the overflow detection function No note if not equipped
Explosion-proof static elimination equipment	

Performance Features

- The controller enclosure is flameproof type, reliable explosion-proof performance.
- Static grounding clamp has tank car identification function, ensure its installed on tank car correctly, not other electric conductor, with no-spark type grounding clamp, no spark produced when equipment impact.
- Static grounding clamp has resistance inspection and liquid level monitoring function, provide local and remote audible and visual alarm and interlocking signal for “static” and overflow” status, which is convenient for operator to find out problem and avoid overflow accident.
- Grounding body resistance has inspection function, ensure reliable grounding of system, when electrostatic grounding is bad or grounding loop resistance >10Ω, provide alarm warning.
- With voice and LCD function, the intensity of the sound is 70~120db (the distance is 30cm).
- Relay signal output for DCS pump (valve), when grounding is not normal, cut off the operation, audible and visual alarm can still be remote controlled, remind operator the real-time status of on-site grounding.
- Red LED shows warning, green LED shows normal working, yellow LED shows standby status.
- Grounding clamp uses alloy aiding thimble, with the features of high hardness, good electric conduction, strong breaking paint and rust power, etc. ensure good grounding monitoring device.
- Grounding clamp is helix tube shrink design, with the capacities of strength anti-pull, anti-drop, etc.
- It can intelligently detect whether the human static voltage is conducted, when the human static voltage is in a dangerous value, sound and light alarm.

Zones 1&2; 21&22

Explosion-proof Online Monitoring Analysis System
BXCQ Explosion-proof Overflow Static Grounding Control System

Configuration selection table of system equipment

Legend	Type spec. and name	Parameters	Remark
	BXCQ-YJC Explosion-proof Overflow Static Grounding Controller	Ex mark: Ⓔx II 2 G Ex db ia IIB+H_2 T6 Gb Ⓔx II 2 D Ex ia tb IIIC T80℃ Db Protection degree: IP66 Response time: <1S Test resistance: <10Ω Working voltage: 100~250V AC 50/60HZ, 220V~240V AC 50/60Hz, 24V DC Working current: <20mA Warning method: Interlocking signal and three color light instruction Output signal: Relay output, NO NC is optional, 10A 30VDC or 10A 250VAC Enclosure size: 200×300×170 mm Installation dimension: 210×230 mm	Aluminium alloy enclosure
	BXCQ-JC Explosion-proof Static Grounding Controller	Ex mark: Ⓔx II 2 G Ex db ia IIB+H_2 T6 Gb Ⓔx II 2 D Ex ia tb IIIC T80℃ Db Protection degree: IP66 Response time: <1S Test resistance: <10Ω Working voltage: 100~250V AC 50/60HZ, 220V~240V AC 50/60Hz, 24V DC Working current: <20mA Warning method: sound and light alarm (optional) Output signal: Relay output, NO NC is optional, 10A 30VDC or 10A 250VAC Enclosure size: 200×300×170 mm Installation dimension: 210×230 mm	Aluminium alloy enclosure
	BXCQ-YC Explosion-proof Overflow Controller	Ex mark: Ⓔx II 2 G Ex db ia IIB+H_2 T6 Gb Ⓔx II 2 D Ex ia tb IIIC T80℃ Db Protection degree: IP66 Response time: <1S Working voltage: 100~250V AC 50/60HZ, 220V~240V AC 50/60Hz, 24V DC Working current: <20mA Warning method: Interlocking signal and three color light instruction Output signal: Relay output, NO NC is optional, 10A 30VDC or 10A 250VAC Enclosure size: 200×300×170 mm Installation dimension: 210×230 mm	Aluminium alloy enclosure
	BXCQ-JCL Explosion-proof Static Grounding Controller (dual purposes of man and motor)	Ex mark: Ⓔx II 2 G Ex db ia IIB+H_2 T6 Gb Ⓔx II 2 D Ex ia tb IIIC T80℃ Db Protection degree: IP66 Response time: <1S Test resistance: <10Ω Working voltage: 220VAC or 24VDC Working current: <20mA Warning method: sound and light alarm (optional) Output signal: Relay output, NO NC is optional, 10A 30VDC or 10A 250VAC Touching ball material: Electrostatic subconductor Touching ball diameter: 90mm Enclosure size: 200×300×170 mm Installation dimension: 210×230 mm	Aluminium alloy enclosure
	BXJ-IIB Series Explosion-proof Junction Box	Ex mark: Ⓔx II 2 G Ex db IIB+H_2 T6 Gb Ⓔx II 2 D Ex tb IIIC T80℃ Db IP66 Protection degree: IP66	Aluminium alloy enclosure
	Static Grounding Clamp	Clamp tooth material: Tungsten alloy Opening range: Clamp body material: 304 (316 optional)	
	Corrosion Resistance Helical Line	Cable material: Copper wire Surface material: PU Standard equipment length: 7m	The length of helical Line is customized, the max length is 15m
	Homing board	Material: 304 stainless steel	

Typical scheme diagram

BXCQ-YJC/(II)
Explosion-proof Overflow Static Grounding Control System (Voice prompt function)

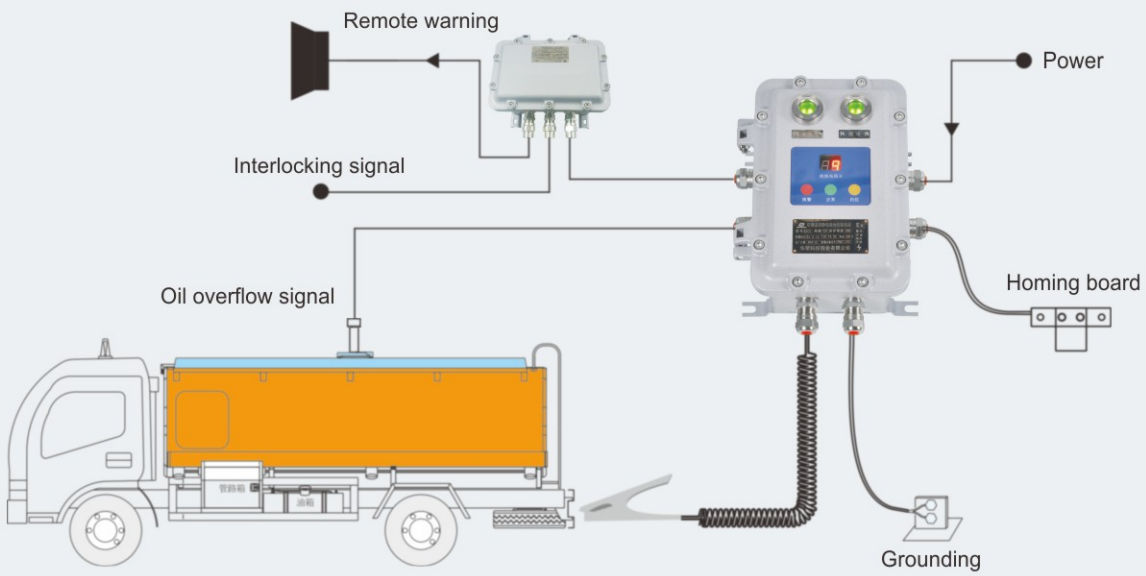

BXCQ-JC
Explosion-proof Static Grounding Control System

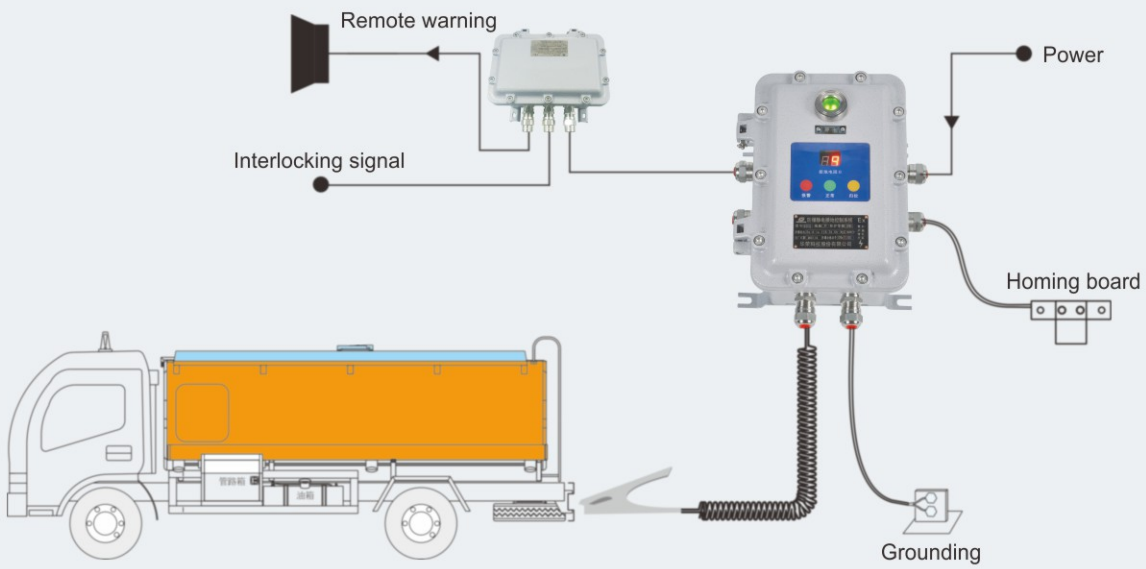

Typical scheme diagram

BXCQ-YC
Explosion-proof Overflow Control System

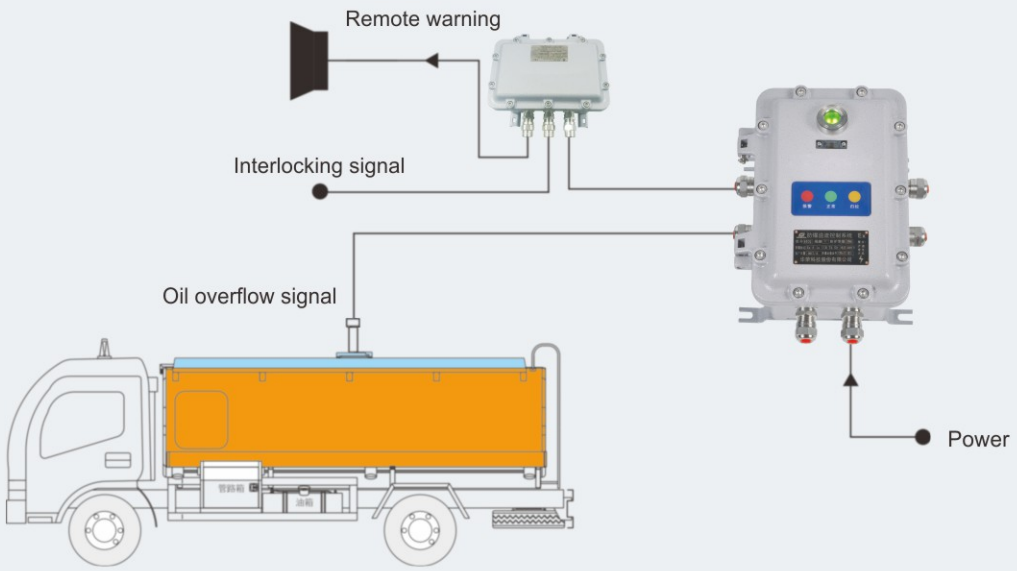

BXCQ-JCL
Explosion-proof Static Grounding Control System (dual purposes of man and motor)

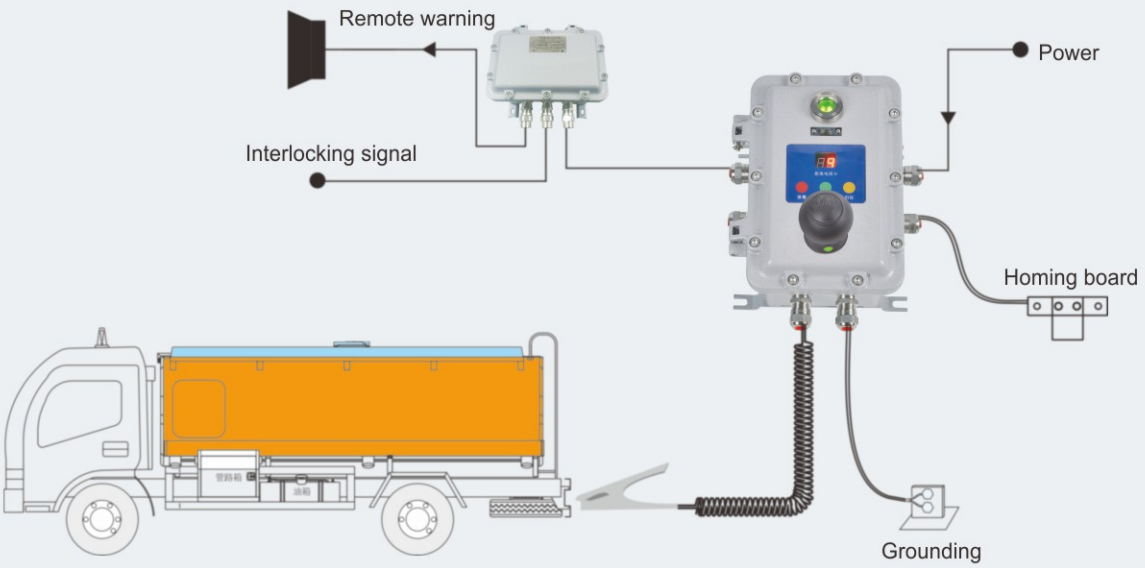

Helicopter Platform
Helicopter Landing Platform Aid System

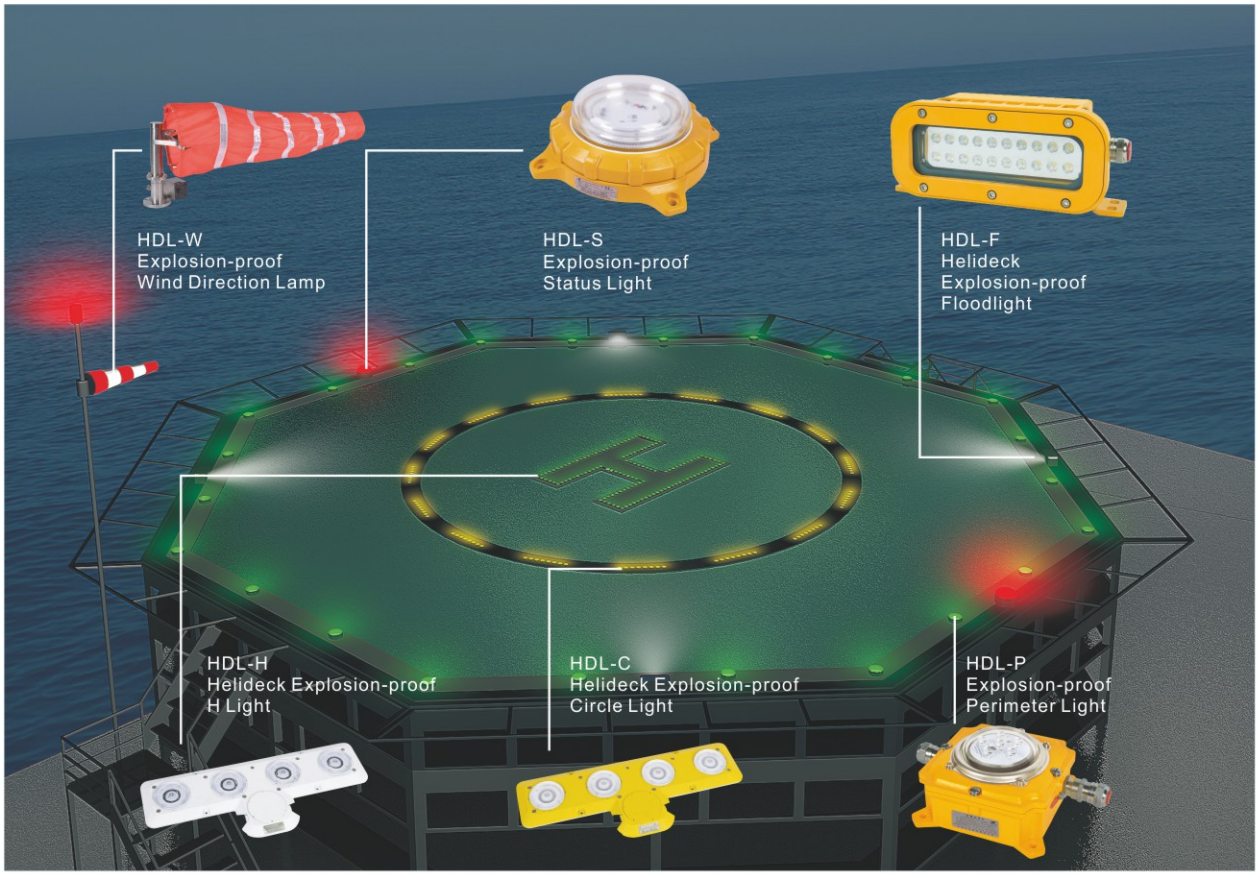

Application

- Widely used for landing aid signal on helideck of marine engineering oil and gas drilling platforms and ships etc. hazardous area.
- Can reliably work in severe environment susceptible to moisture, vibration, or corrosion.
- Explosive hazardous atmosphere Zone 1, Zone 2, Zone 21 and Zone 22.

Executive Standard

- Comply with CAP 437 ICAO Annex 14, IMO standard requirements.
- Comply with IEC60079, EN60079, GB/T3836 standards.

System Features

- High-performance explosion-proof security
- Long-life LED light source> 100000h
- High degree of protection: IP66 / IP67
- High anti-corrosion design, adapt to the marine environment
- Temperature: -40℃~+55℃

Zones 1&2; 21&22

Helicopter Platform
Helicopter Landing Platform Aid System

Field Application

We attach importance to the quality of the products and pay attention to the needs of our customers.
The products have been applied to many projects at home and abroad. Well received by the users!
Welcome your opinion and feedback.



Control panel



Effect Map of Helicopter Landing Platform Aid System



Helideck Explosion-proof Floodlight



Night View Map of Helicopter Landing Platform Aid System



Explosion-proof Wind Direction Lamp



Explosion-proof Perimeter Light

Helicopter Platform
Helicopter Landing Platform Aid System

Helideck landing aid signalisation lighting system

- Systematically meet CAP 437, ICAO standards;
- All the products and accessories installed on the platform of the helicopter platform are suitable for mounting in the range of ambient temperature(-40℃~+55℃);
- All explosion proof lamps and exposed fasteners installed on helicopter platforms can resist the corrosion of ocean environment.
- All lamps meet at least the requirements of the IEC international protection (IP) standard IP66, i. e. Dust proof and strong water injection.

HDL-H
Helideck Explosion-proof H Light

Ex II 2 G Ex db eb IIC T6 Gb
Ex II 2 D Ex tb IIIC T80℃ Db IP66/IP67



- Enclosure uses high quality maritime aluminium alloy, which is applied to the ocean environment.
- LED green light source, service life is up to 100000 hours.
- Standard light and bright light of light fittings can be switched through controlling the system and the dimming instruction of light fittings.
- Professional optics software designed secondary light distribution system, conform to CAP437 standard requirements.
- Total height is less than 25mm, protection degree IP66/IP67/IP69.

HDL-C
Helideck Explosion-proof Circle Light

Ex II 2 G Ex db eb IIC T6 Gb
Ex II 2 D Ex tb IIIC T80℃ Db IP66/IP67



- Enclosure uses high quality maritime aluminium alloy, which is applied to the ocean environment.
- LED yellow light source, service life is up to 100000 hours.
- Standard light and bright light of light fittings can be switched through controlling the system and the dimming instruction of light fittings.
- Professional optics software designed secondary light distribution system, conform to CAP437 standard requirements.
- Total height is less than 25mm, protection degree IP66/IP67/IP69.

HDL-P
Explosion-proof Perimeter Light

Ex II 2 G Ex db eb IIC T6 Gb
Ex II 2 D Ex tb IIIC T80℃ Db IP66/IP67



- Enclosure is precision casting by 316 stainless steel, powder coated on surface after finish machining, strong corrosion resistance.
- LED green light source, service life is up to 100000 hours.
- Professional optics software designed secondary light distribution system, conform to CAP437 standard requirements.
- Protection degree IP66/IP67.

Helicopter Platform
Helicopter Landing Platform Aid System

Helideck landing aid signalisation lighting system

HDL-F
Helideck Explosion-proof Floodlight



Ex II 2 G Ex db eb mb op is IIC T5 or T4 Gb
Ex II 2 D Ex op is tb IIIC T95℃ or T130℃ Db

- Enclosure uses maritime aluminium alloy, powder coated on surface after preservative treatment.
- LED white light source, service life is up to 100000 hours.
- In-built constant voltage constant current driving power, wide voltage input, constant power output, fast start, stable performance, surge resistance, overcurrent, open circuit, short circuit, etc. protection function.
- Total height is less than 135mm, protection degree IP66/IP67.

HDL-S
Explosion-proof Status Light



Ex II 2 G Ex db eb mb IIC T6 Gb
Ex II 2 D Ex tb IIIC T80℃ Db IP66

- Enclosure uses maritime aluminium alloy, powder coated on surface after preservative treatment.
- Professional optics software designed secondary light distribution system, conform to CAP437 standard requirements.
- Through the control system, status instructions are given to the lamps. The red LED light source flashes and gives warning signals.
- Protection degree IP66.

HDL-W
Explosion-proof Wind Direction Lamp



Ex II 2 G Ex db eb op is IIC T6 Gb
Ex II 2 D Ex tb op is IIIC T80℃ Db

- Enclosure uses maritime aluminium alloy, powder coated on surface after preservative treatment.
- Professional optics software designed secondary light distribution system, conform to CAP437 standard requirements.
- Through the control system, status instructions are given to the lamps. The red LED light source flashes and gives warning signals.
- Protection degree IP66.

HRMD91
Explosion-proof Distribution Panels



Ex II 2 G Ex db IIB+H_2 T6 Gb
Ex II 2 D Ex tb IIIC T80℃ Db IP66

- Copper-free Aluminium Alloy enclosure, powder coated surface.
- Equipped with specialized hinge structure, which can prevent the flameproof joints from damage when opening and closing the box, and greatly prolong the service life of box.
- The boxes can be combined and installed freely to save space and meet the requirements of various distribution systems.
- Special requirements on request.

Explosion-proof Computer System
HRS900 Series Explosion-proof Tablet



- Explosion protection to
  -CENELEC
  -IEC
- Can be used in
  Zone 1 and Zone 2

Product characteristics

- This product is a professional explosion-proof tablet with waterproof, compression-resistant, drop-resistant structural design, and with the built-in barometric pressure sensor, e-compass, NFC and other sensors, safety and security for work and travel is greatly increased.

Product advantages

Indestructible Quality

- In order to push the quality of products to the limit, we conduct rigorous physical tests.
- Its functionality and performance have also been comprehensively evaluated.
- It is able to withstand the harshest conditions and deliver reliable performance in demanding environments.

Confronting Any Challenges

- A variety of technical guarantees for security , to provide safe and stable communication services in dangerous environments such as flammable and explosive gases.
- Easily cope with all kinds of harsh and extreme environments such as special operations, outdoor exploration, extreme sports or emergency rescue.

NFC Seamless Business Operations

- NFC-enabled products enhance business mobility and connectivity.
- Verify employee IDs and scan barcodes to make your business truly mobile and linked.

Zones 1&2

Technical data

Explosion-proof Tablet	HRS900
Explosion protection	
Global (IECEx)	IECEx (applied for)
Gas	Ex ib IIC T4 Gb
Europe (ATEX)	ATEX (applied for)
Gas	Ⓔx II 2 G Ex ib IIC T4 Gb
Certificates	IECEx; ATEX
Conformity to standards	EN IEC 60079-0, EN 60079-11, IEC 60079-0, IEC 60079-11
Processor	8 x MT8781 2.2GHz
Operating system	Android 13
Cellular models	GSM/WCDMA/CDMA/TDD-LTE/FDD-LTE
Frequency bands	
GSM	B2/3/5/8
WCDMA	B1/2/4/5/6/8/19
CDMA	BC0/BC1/BC10
FDD-LTE	B1/2/3/4/5/7/8/12/13/17/18/19/20/25/26/28A/28B/66
TDD-LTE	B34/38/39/40/41
SIM card	SIM card, Nano SIM card, T card; hot-pluggable, dual standby
Display	11 inch FHD with IPS 1200*2000
Camera	Front camera 1600W pixels, rear camera 4800W pixels with one flashing light
Face ID	Provided
RAM+Data memory	8GB+256GB; TF could be extended to 256GB(Max. 2 TB)
Battery	Lithium-polymer battery (4.4V high voltage cell)
Dimensions	277.8×178×14mm
Weight	1008g
Color	Black+yellow
Degree of protection	IP68
Ambient temperature	-40℃~+60℃
Touchscreen	Capacitive 10 points touch screen, can be operated with gloves and stylus
Speakers	1326 dual box speakers
Microphone	Silicon microphone
Charging	Type-C USB 2.0
Bluetooth	BT 5.2
WLAN	WIFI(2.4G/5G)/WIFI 6
GPS sensor	GPS+GLONASS+BDS+Galileo
Sensor	Light sensor, acceleration sensor, gravity sensor, gyroscope, geomagnetic sensor, barometric pressure sensor, electricity meter, pedometer
Touch ID	Provided
OTG connect	Provided
FM transmission	Provided
POC cellular	Global POC public network intercom, Fast and convenient communication in distance (single call, group call, broadcast, one call and multiple responses) POC public network intercom, preset POC key for public network intercom

Explosion-proof Computer System
BPC-Z Series Explosion-proof Desktop



- Explosion protection to
  -CENELEC
  -IEC
- Can be used in
  Zone 1 and Zone 2
  Zone 21 and Zone 22

Catalogue number logic

BPC - Z / □

- Explosion-proof computer system
- Explosion-proof desktop
- Specifications
  - L: Low-End Configuration
  - M: Mid-Range Configuration
  - H: High-End Configuration

Product features

- The explosion-proof enclosure is welded by stainless steel, with a brushed finish on its surface.
- The system is equipped with Intel ATOM D series low-power high-performance processor solutions, offering comprehensive functionalities and strong environmental adaptability.
- It utilizes a miniaturized, low-power, high-performance embedded full-scale computer, featuring a compact structure and fanless design, with the enclosure also serving as a heat sink.
- Hard connections between internal modules enhance the reliability of signal conversion and assembly efficiency, significantly increasing the mean time between failures and reducing maintenance time.
- It features a wide voltage input, incorporating anti-reversal and over-current, over-voltage protection designs, ensuring normal operation in unstable voltage and supporting remote start-up and shutdown interfaces.
- The system employs high-quality wide temperature industrial-grade components, catering to industrial sites and special industry applications.

Zones 1&2; 21&22

Explosion-proof Computer System
BPC-Z Series Explosion-proof Desktop

Technical data

Explosion-proof desktop	BPC-Z
Explosion protection	
Global (IECEx)	IECEx (applied for)
Gas and dust	Ex db eb [ib] IIB T6 Gb Ex tb IIIC T80℃ Db
Europe (ATEX)	ATEX (applied for)
Gas and dust	Ⓔx II 2 G Ex db eb [ib] IIB T6 Gb Ⓔx II 2 D Ex tb IIIC T80℃ Db
Certificates	IECEx; ATEX
Conformity to standards	IEC 60079-0, IEC 60079-1, IEC 60079-7, IEC 60079-11, IEC 60079-31 EN 60079-0, EN 60079-1, EN 60079-7, EN 60079-11, EN 60079-31
Degree of protection	IP66

Selection table

Product Model	BPC-Z/L	BPC-Z/M	BPC-Z/H
Configuration	Low-End Configuration	Mid-Range Configuration	High-End Configuration
Processor	Intel® H61	Intel® H61	Intel® Q77
CPU	Pentium Duo G2120 3.1G	Core Quad-Core 4 Threads I5-2400 3.1G	Core Quad-Core 8 Threads I7-2600 3.4G
Memory	2GB, supporting up to 16GB with two memory slots		
Hard Drive	500G	500G	1TB
Storage	4×SATA 2.0 Interfaces	4×SATA 2.0 Interfaces	6×SATA Interfaces with hot-swappable
Graphics Card	Discrete Graphics Card with 1GB memory		
Network Ports	2×10/100/1000Mbps	2×10/100/1000Mbps	2×Gigabit Ethernet Ports, supporting Wake-on-LAN and AMT 8.0 features
Watchdog Timer	255 Levels, programmable seconds/minutes, triggering interrupt on timeout or system reset		
Power Supply	250W	350W	350W
Operating Environment	-10℃~+60℃; 10%~90% (non-condensing state)	-10℃~+60℃; 10%~90% (non-condensing state)	-5℃~+60℃; 10%~90% (non-condensing state)

Dimension drawings (all dimensions in mm) - subject to alteration

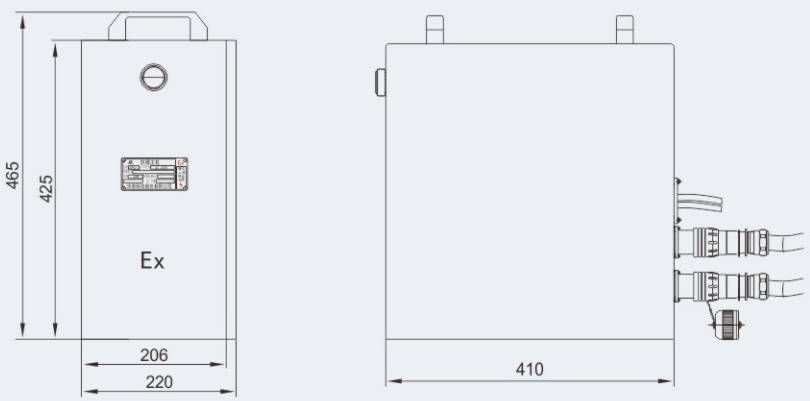

Explosion-proof Computer System
BPC-X Series Explosion-proof Monitor



- Explosion protection to
  -CENELEC
  -IEC
- Can be used in
  Zone 1 and Zone 2
  Zone 21 and Zone 22

Catalogue number logic

BPC - X / □

- Screen size
  - 19: 19.0-inch
  - 21: 21.5-inch
  - 24: 24.0-inch
- Explosion-proof monitor
- Explosion-proof computer system

Product features

- Implements high-reliability industrial-grade monitors with explosion-proof treatment, featuring adjustable screen brightness, contrast, and menu functions;
- Installation: panel-type, wall mount, and VESA standard arm mount;
- High-brightness LCD screen;
- Enclosure constructed from high-quality stainless steel;
- Overall protection rating of IP66.

Zones 1&2; 21&22

Technical data

Explosion-proof Monitor	BPC-X
Explosion protection	
Global (IECEx)	IECEx (applied for)
Gas and dust	Ex db IIB T6 Gb Ex tb IIIC T80℃ Db
Europe (ATEX)	ATEX (applied for)
Gas and dust	Ⓔx II 2 G Ex db IIB T6 Gb Ⓔx II 2 D Ex tb IIIC T80℃ Db
Certificates	IECEx; ATEX
Conformity to standards	IEC 60079-0, IEC 60079-1, IEC 60079-31 EN 60079-0, EN 60079-1, EN 60079-31
Degree of protection	IP66

Selection table

Product Model	BPC-X/9	BPC-X/21	BPC-X/24
Screen Size	19.0 inches	21.5 inches	24.0 inches
Optimal Resolution	1280×1024	1920×1080	1920×1080
Aspect Ratio	5:4	16:9	16:9
Panel Type	IPS	VA	IPS
Backlight Type	LED	LED	W-LED
Static Contrast Ratio	1000:1	3000:1	1000:1
Response Time	8ms	8-12ms	8ms
Luminance	250cd/m²(>600cd/m² optional)	250cd/m²(>600cd/m² optional)	250cd/m²(>600cd/m² optional)
Viewing Angle	178/178°	178/178°	178/178°
Color Gamut	16.7M	16.7M	16.7M
Video Interface	D-Sub(VGA), HDMI, Displayport	HDMI, D-Sub(VGA)	D-Sub(VGA), HDMI, Displayport
Other Interfaces	USB3.0×2 USB2.0×2	DP	USB3.2 Gen1 upstream USB3.2 Gen1×4
Power Performance	120-230V, 50-60Hz	100-240V AC, 50-60Hz	100-240V AC, 50-60Hz
Power Consumption	≤14W	≤22W	≤48W

Dimension drawings (all dimensions in mm) - subject to alteration

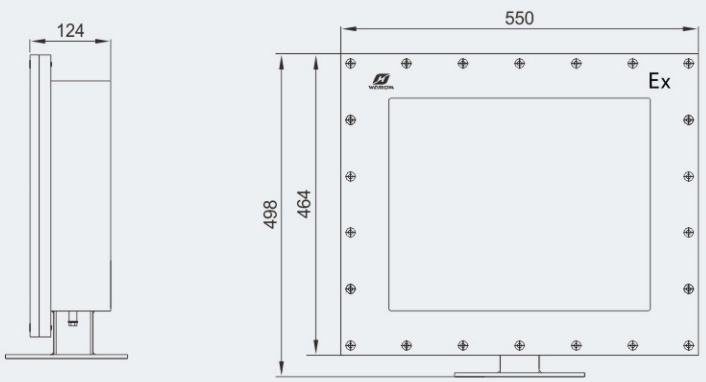

This diagram depicts a 19-inch model.

Explosion-proof Computer System
BPC-XM Series Explosion-proof Monitor (Touch-integrated)



- Explosion protection to
  -CENELEC
  -IEC
- Can be used in
  Zone 1 and Zone 2
  Zone 21 and Zone 22

Catalogue number logic

BPC - XM / □

- BPC: Explosion-proof computer system
- XM: Explosion-proof monitor (Touch-integrated)
- □ Screen size
  - 12: 12.1-inch
  - 15: 15.0-inch
  - 17: 17.0-inch
  - 19: 19.0-inch
  - 21: 21.5-inch

Product features

- Explosion-Proof Human-Machine Interface (HMI) with touch capability, offering high efficiency and sensitivity, enabling direct touch in explosion-proof zones;
- Dual-NIC standard configuration provides network redundancy, enhancing client availability on the network;
- Fanless design featuring unique and innovative high-efficiency thermal management, preventing shutdowns caused by fan failures;
- Wide-screen display maintains the same resolution as DCS system operator stations, achieving optimal quality and viewing experience;
- Support direct communication with PLCs, facilitating seamless data exchange with connected devices;
- Specially designed for hazardous industrial environments, this integrated explosion-proof HMI operates via touch, supports onboard intrinsic safety keyboards, and explosion-proof mice, and is widely used in information and automation control systems across explosive hazard sites.

Zones 1&2; 21&22

Explosion-proof Computer System
BPC-XM Series Explosion-proof Monitor (Touch-integrated)

Technical data

Explosion-proof monitor (Touch-integrated) BPC-XM

Explosion protection	
Global (IECEx)	IECEx (applied for)
Gas and dust	Ex db IIB T6 Gb Ex tb IIIC T80℃ Db
Europe (ATEX)	ATEX (applied for)
Gas and dust	Ⓔx II 2 G Ex db IIB T6 Gb Ⓔx II 2 D Ex tb IIIC T80℃ Db
Certificates	IECEx; ATEX
Conformity to standards	IEC 60079-0, IEC 60079-1, IEC 60079-31 EN 60079-0, EN 60079-1, EN 60079-31
Degree of protection	IP66
Brightness	350cd/m^2(>600cd/m^2 optinal)
Operating Mode	Fingertip or touch-pen operation (explosion-proof keyboard and mouse optional)
CPU	Intel Core i5 / Intel Core i7
Memory	8 GB(16GB, 32GB optional)
Storage	128G SSD(256G, 512G, 1T SSD optional)
Ethernet	2*10/100/1000 Mbps Ethernet/R45
Serial Port	4 * RS485 /RS422 /RS232
USB	USB 3.0, with extension capability for 2 USB 2.0
Operating System	win 7, win 10, win 11, Kirin (Domestic version)
Operating Temperature	-40℃~+60℃
Operating Voltage	220VAC, 110VAC /24VDC
Installation Method	Wall-mounted, flush-mounted on front panel, optional column-/cantilever-/wall-mounted console

Selection table

Product Model	BPC-XM/12	BPC-XM/15	BPC-XM/17	BPC-XM/19	BPC-XM/21
Screen Size	12.1"	15"	17"	19"	21.5"
Resolution	1024*768(4:3)		1280*1024(5:4)		1920*1080(16:9)
Unit Weight	16Kg	24Kg	30Kg	34Kg	36Kg

Dimension drawings (all dimensions in mm) - subject to alteration

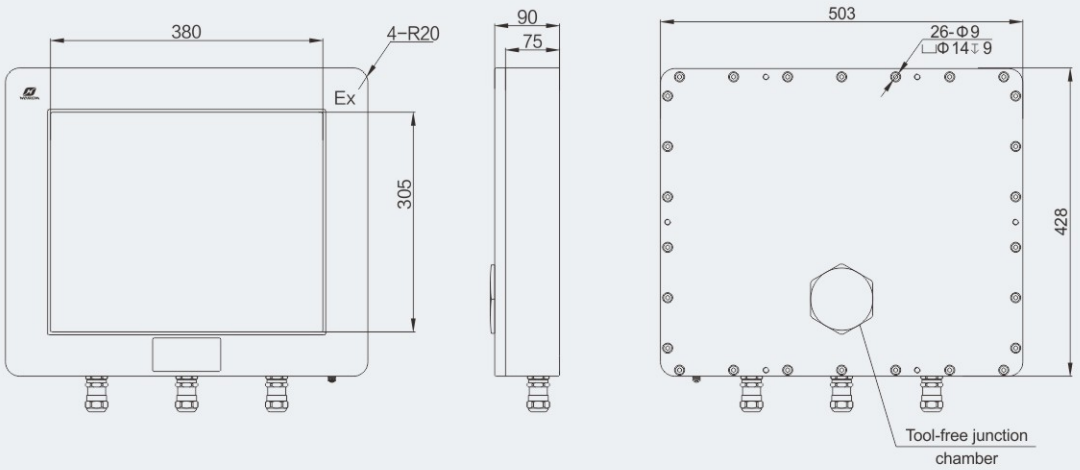

This diagram depicts a 19-inch model.

Explosion-proof Computer System
BPC-J Series Intrinsic Safety Keyboard



- Explosion protection to
  -CENELEC
  -IEC
- Can be used in
  Zone 1 and Zone 2
  Zone 21 and Zone 22

Catalogue number logic

BPC - J / □

- Specifications
- Intrinsic safety keyboard
- Explosion-proof computer system

Product features

- Special industrial keyboard subject to intrinsic safety and explosion-proof treatment, with reliable anti-explosion performance and stable operation;
- High-strength aluminum alloy enclosure, stainless steel keyboard keys, weather-proof, protection rating IP66;
- 69-key general operating keyboard for convenient operation;
- Equipped with PS/2 or USB interface for user flexibility.

Zones 1&2; 21&22

Technical data

Intrinsic safety keyboard	BPC-J
Explosion protection	
Global (IECEx)	IECEx (applied for)
Gas and dust	Ex ib IIB T6 Gb Ex tb IIIC T80℃ Db
Europe (ATEX)	ATEX (applied for)
Gas and dust	Ⓔx II 2 G Ex ib IIB T6 Gb Ⓔx II 2 D Ex tb IIIC T80℃ Db
Certificates	IECEx; ATEX
Conformity to standards	IEC 60079-0, IEC 60079-11, IEC 60079-31 EN 60079-0, EN 60079-11, EN 60079-31
Degree of protection	IP66
Maximum input voltage	DC7.0V
Maximum input current	282mA
Maximum input power	494mW
Maximum internal capacitance	13.4μF
Maximum internal inductance	0mH
Port	USB2.0
Electromagnetic radiation	EN50081-1
Electromagnetic immunity	EN50082-1
Key travel distance	2mm
Key pressure	120g
Service life	5×10^6 times

Dimension drawings (all dimensions in mm) - subject to alteration

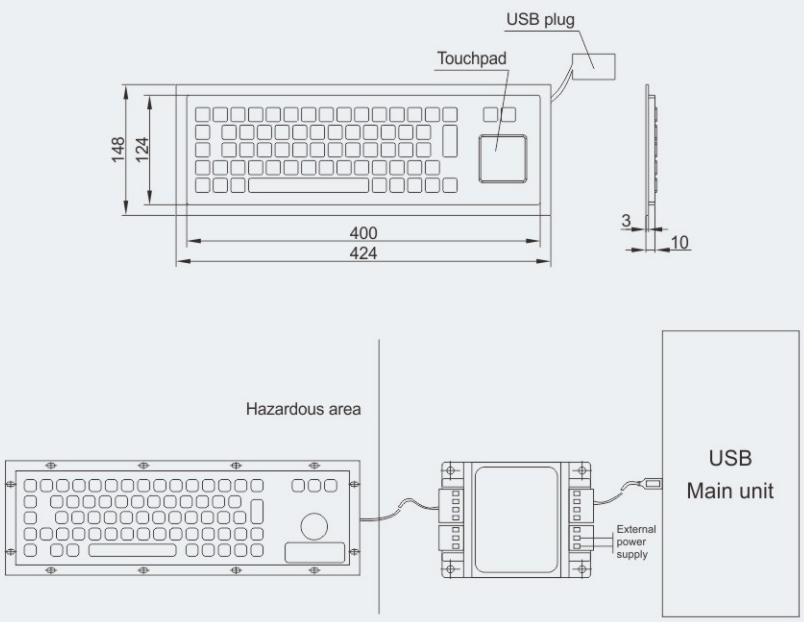

Safety bar cannot be used directly in hazardous areas

Note: this keyboard needs to be used in conjunction with our company's bpc-a explosion-proof safety bar.

Explosion-proof Computer System
BPC-S Series Explosion-proof Mouse



- Explosion protection to
  -CENELEC
  -IEC
- Can be used in
  Zone 1 and Zone 2

Catalogue number logic

BPC - S / □

- Specifications
- Explosion-proof mouse
- Explosion-proof computer system

Product features

- The explosion-proof mouse features a silicone shell and is equipped with an industrial-grade gold-plated PCB control board, enabling precise and rapid cursor positioning with an extremely comfortable and smooth operation, free of any noise.
- This mouse has undergone intrinsic safety explosion-proof treatment, ensuring stable signals and high safety performance.

Zones 1&2; 21&22

Technical data

Explosion-proof mouse	WR-BPC-S
Explosion protection	
Global (IECEx)	IECEx (applied for)
Gas and dust	Ex ib IIB T6 Gb
	Ex tb IIIC T80℃ Db
Europe (ATEX)	ATEX (applied for)
Gas and dust	Ⓔx II 2 G Ex ib IIB T6 Gb
	Ⓔx II 2 D Ex tb IIIC T80℃ Db
Certificates	IECEx; ATEX
Conformity to standards	IEC 60079-0, IEC 60079-11, IEC 60079-31
	EN 60079-0, EN 60079-11, EN 60079-31
Degree of protection	IP66
Maximum input voltage	DC7.0V
Maximum input current	282mA
Maximum input power	494mW
Maximum internal capacitance	12μF
Maximum internal inductance	0mH
Port	USB2.0

Dimension drawings (all dimensions in mm) - subject to alteration

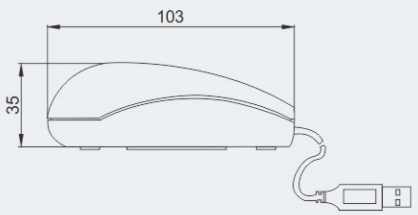

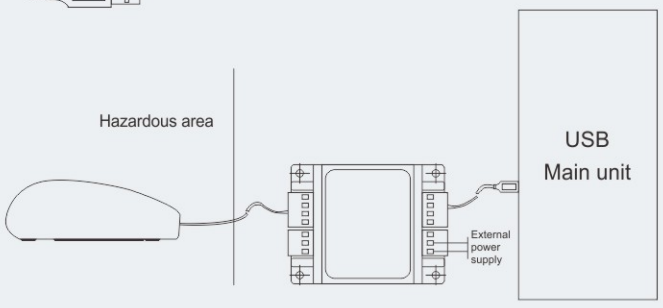

Safety bar cannot be used directly in hazardous areas

Note: This mouse is designed for use in conjunction with our company's BPC-A explosion-proof safety barrier.

Explosion-proof Computer System
BPC-A Series Safety Barrier for Explosion-proof Keyboard and Mouse



- Explosion protection to
  -CENELEC
  -IEC
- Can be used in
  Zone 1 and Zone 2

Catalogue number logic

BPC - A / □

- Specifications
- Safety barrier for explosion-proof keyboard and mouse
- Explosion-proof computer system

Product features

- Is formed from flame-retardant anti-arc plastic, with the entire circuit encapsulated within the enclosure and sealed with flame-retardant epoxy resin to prevent abnormal contact of components and eliminate the possibility of external mixed contact.
- Features clearly marked intrinsic safety terminals; the distance between the terminals, the creepage distance of the distance between the terminals, the enclosure, the printed board, and the sealing material, the electrical clearance, and the relative trace index, are all in line with the relevant provisions of the GB/T 3836.4 standard;
- Displays terminal identifiers on the exterior, facilitating product identification and preventing misconnection.
- The safety barrier for BPC-A intrinsic safety keyboard and mouse is an intrinsic safety device. It serves as a safety protection feature in the explosion-proof system as an intrinsic safety associated device for the keyboard and mouse. It serves as a link between intrinsic safety keyboards and explosion-proof mice in hazardous areas and computers or industrial PC in safe areas (the safety barrier should be located in the safe zone). Under normal operation, it does not affect the measurement system's detection and control functions. In fault states (e.g., abnormal high voltages from the computer or industrial PC), the safety barrier restricts excessive energy from entering hazardous areas. Utilizing its multifunctional protective features of voltage and current limitation and rapid circuit disconnection ensures safe use of intrinsic safety keyboards and explosion-proof mice in hazardous areas.
- The safety barrier for BPC-A intrinsic safety keyboard and mouse can be combined with various on-site intrinsic safety keyboards and explosion-proof mice to form intrinsic safety explosion-proof systems, thereby achieving the automation process control of the modern industrial.

Zones 1&2

Technical data

Safety barrier for explosion-proof keyboard and mouse BPC-A

Explosion protection	
Global (IECEx)	IECEx (applied for)
Gas	[Ex ib Gb] IIC
Europe (ATEX)	ATEX (applied for)
Gas	Ⓔx II2 G [Ex ib Gb] IIC
Certificates	IECEx; ATEX
Conformity to standards	IEC 60079-0, IEC 60079-11
	EN 60079-0, EN 60079-11
Degree of protection	IP66
Operating environmental temperature	-20℃~+40℃
Maximum input voltage	DC7.0V
Maximum input current	282mA
Maximum input power	494mW
Maximum internal capacitance	13.7μF
Maximum internal inductance	280μH

Dimension drawings (all dimensions in mm) - subject to alteration

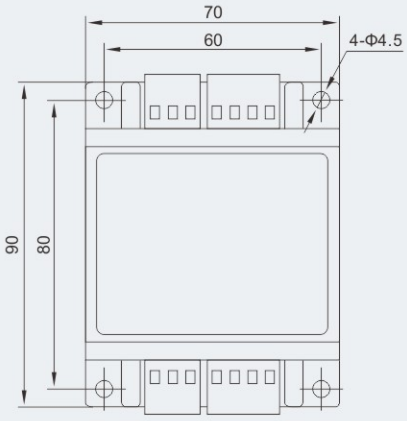



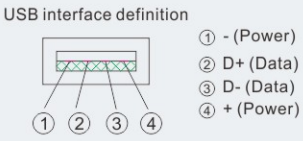

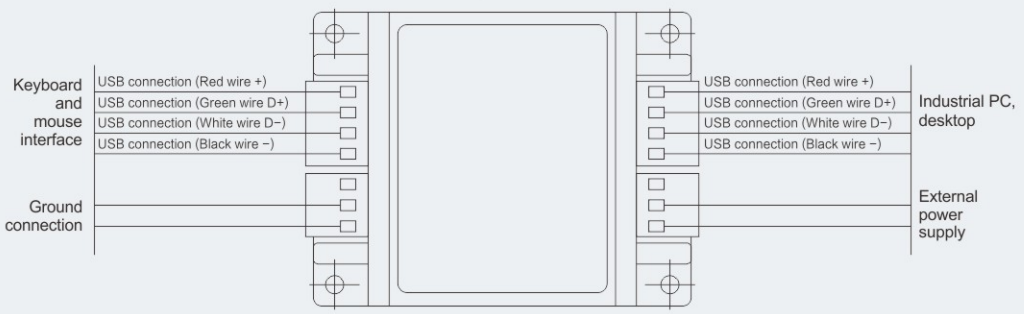

Declaration: All rights reserved. Any copy, duplication, or reprint without authorisation from our company will be prosecuted.



WAROM TECHNOLOGY INCORPORATED COMPANY

Add: No.555# Baoqian Road, Jiading, Shanghai, PRC
Tel: +86-21-39977086 39977085
Fax: +86-21-39977077
http://www.waromgroup.com
E-mail: gmb@warom.com
P.C: 201808

WAROM TECHNOLOGY (MENA) FZCO

Add: No. Plot: S31223, Jafza South, Jebel Ali Free Zone, Dubai, UAE
Tel / Fax: +971 48821048
E-mail: wm@warommena.ae

WAROM TECHNOLOGY ARABIA INDUSTRIAL L.L.C

Add: 1st Industrial City, Dammam, SKA
Tel: +966 13 8400 770 ext. 6000
E-mail: wta@warom.com

WeChat

Official Website

Take good care of the resources, be kind to the environment